Silicon Carbide Devices for Energy Efficient Infrastructure

Ranbir Singh
GeneSiC Semiconductor Inc.
ranbir.singh@genesicsemi.com
+1 703 996 8200 (ph); +1 703 373 6918 (fax)
43670 Trade Center Place Suite 155, Dulles VA 20166

GeneSiC
SEMICONDUCTOR

Energy Efficient Infrastructure Elements

- **Power Conversion for more efficient Datacenters, EV chargers and Industrial Buildings**
- Auxilliary Power supplies and 1700 V SiC switches using simplified Flyback Circuits
- Inverters for Motor Drives
- SiC devices and configurations for Utility Grid-voltage applications
- Conclusions

Future Belongs to DC Microgrid

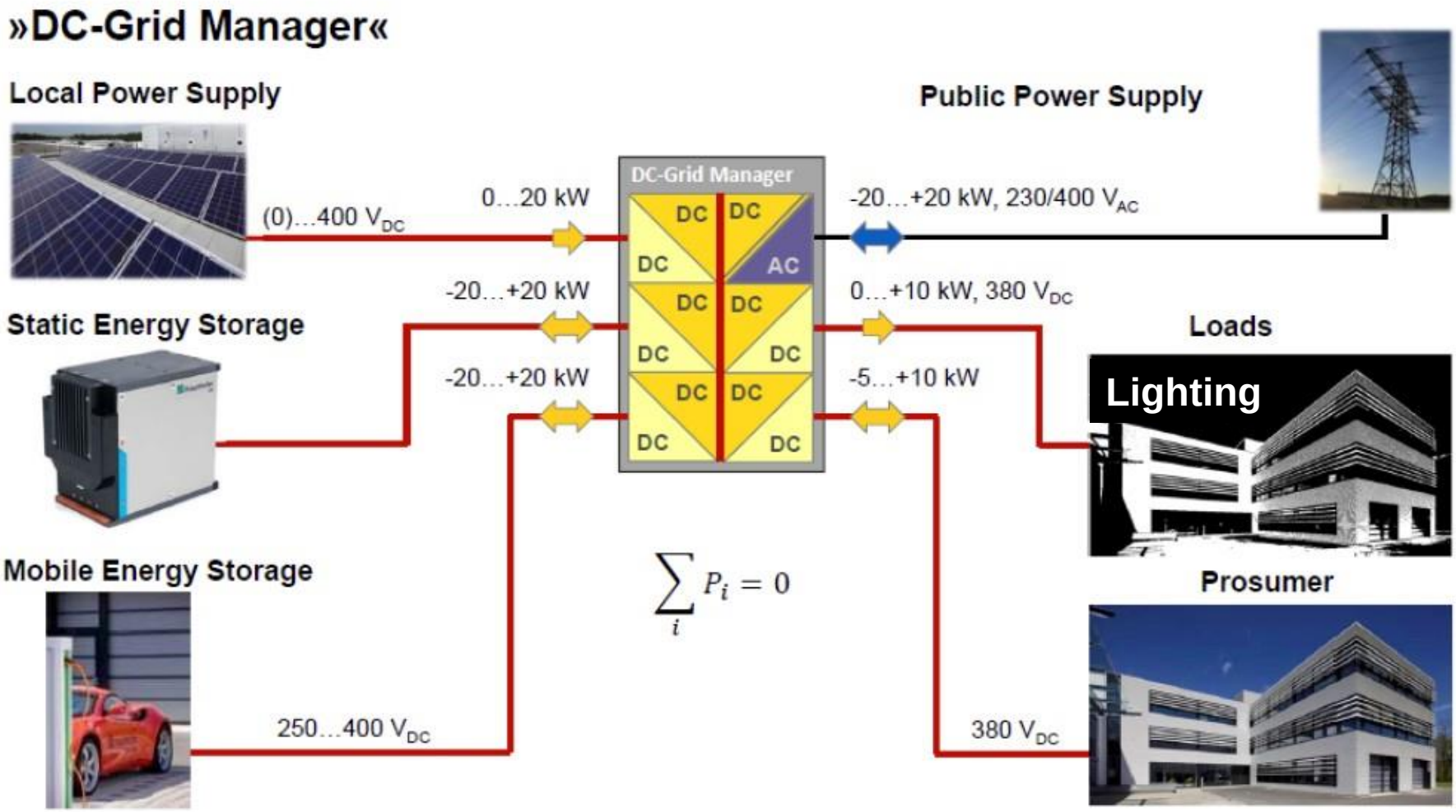

Courtesy: Wunder, Fraunhofer IISB

HVDC Infrastructure/Magnetics

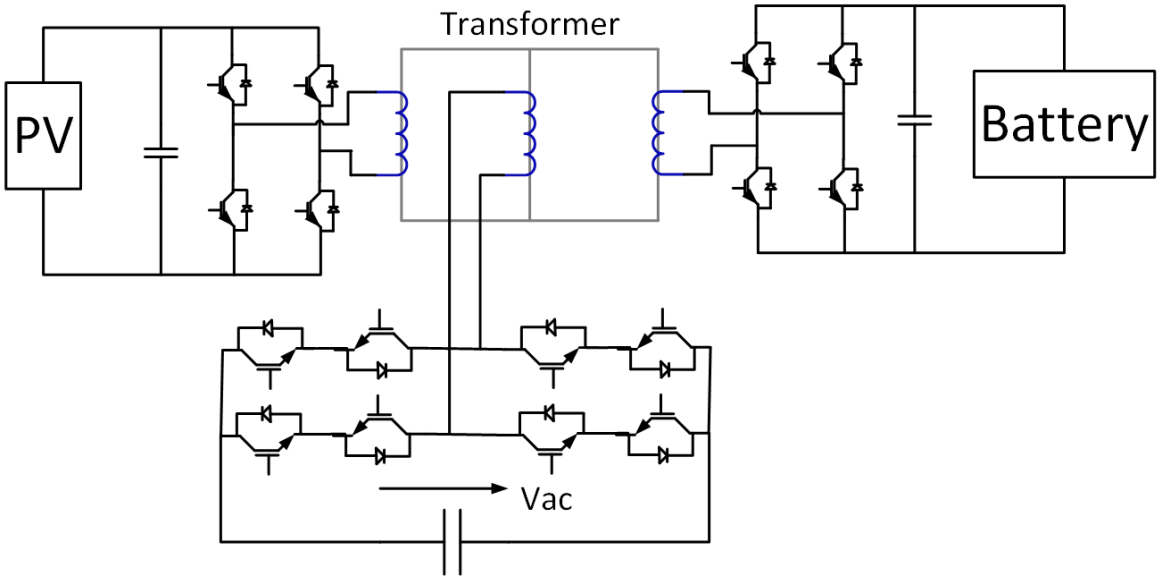

PV Voltage	**800V**
Battery Voltage	400V
AC RMS Voltage	Around 1kV-1.4kV ac, 60Hz
Transformer switching frequency	10 kHz-100kHz
Output Power of the module	50kW-100kW
Transformer Cores	Nano-crystalline, ferrite, powdered/soft ferrite
Transformer winding insulation type	>1mm Plastic insulation over winding
Inter winding Insulation type	Insulating Tape(Kapton, 3M)
Geometry of cores	Multi-limb. Planar, co-axial

Courtesy: NCSU Bhattacharya

Value Proposition – SiC Power Devices

- Higher speed of SiC devices critically enables ~10X higher operating frequencies and higher efficiencies in power circuit
- Results in significant reduction in size, cost, weight of power systems
- Example DC-DC converter circuit at relevant voltage levels

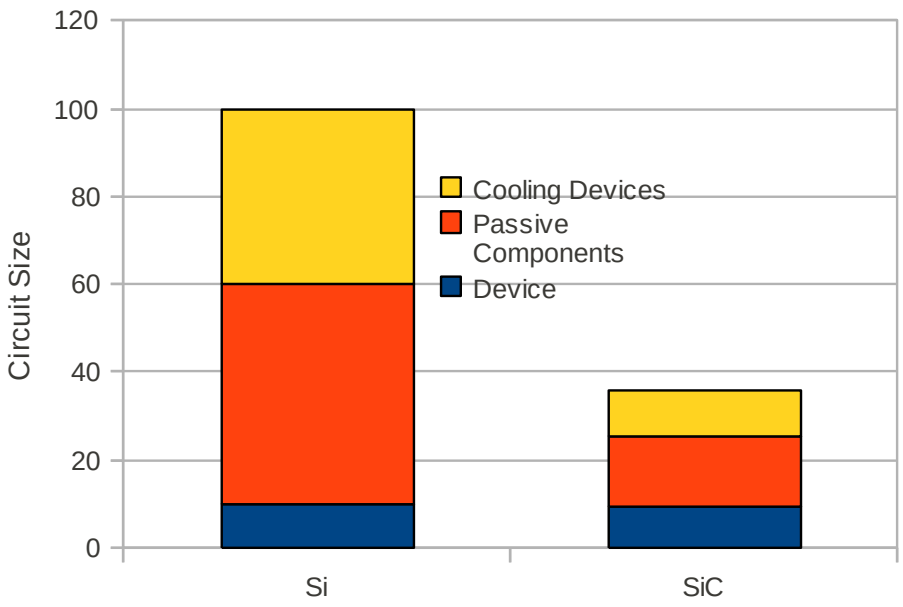

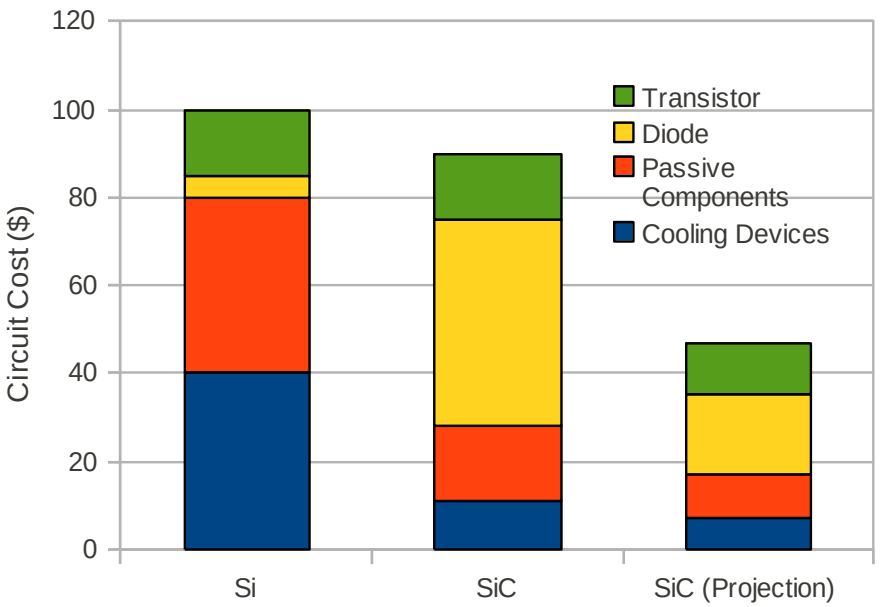

SJT Structure and Advantages

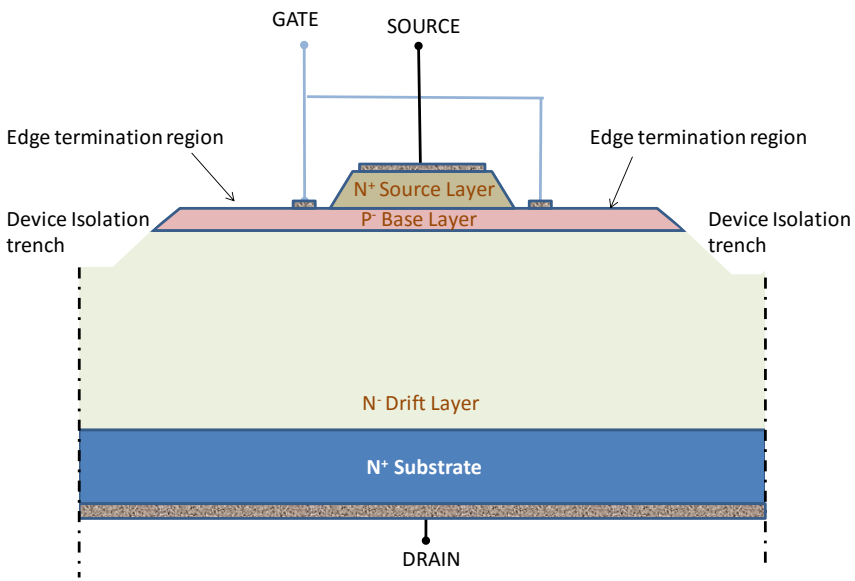

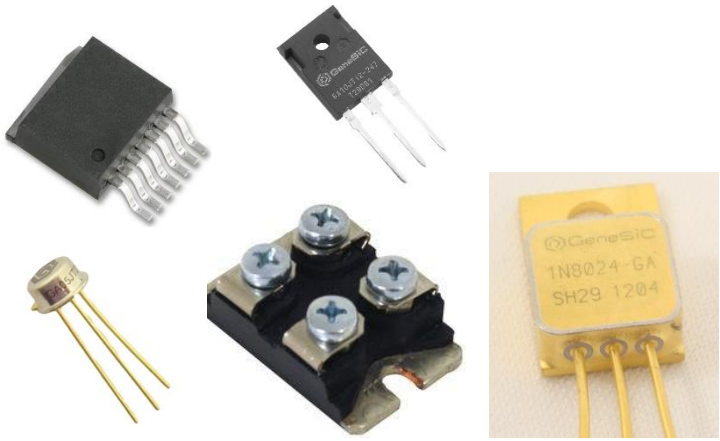

- Lowest $V_{DS(ON)}$ as compared to any other commercial SiC switch
  - **Ron,sp = 2 mΩ-cm² demonstrated**
- Suitable for connecting an anti-parallel diode
- Gate oxide free SiC switch
- Positive temperature coefficient for easy paralleling
- High Operating Temperature
- Best in class temperature independent switching
- Excellent Short Circuit Robustness
- Easy to drive using commercial drivers
- Low gate charge, Low intrinsic capacitance,
- High Yielding, Smaller size, Lower cost

SJT Output and Blocking Characteristics

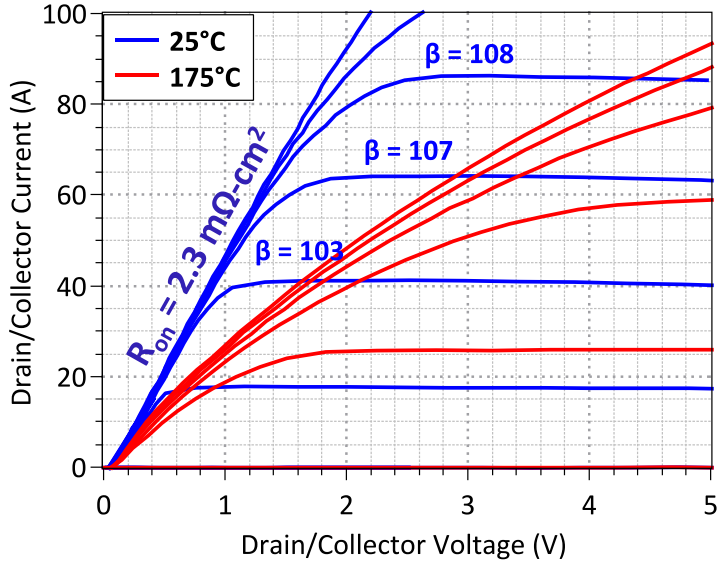

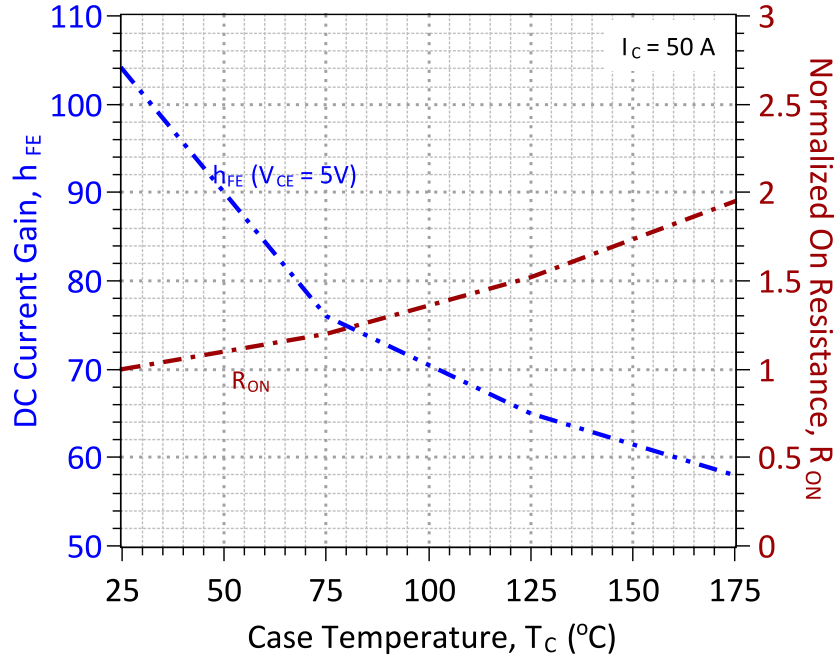

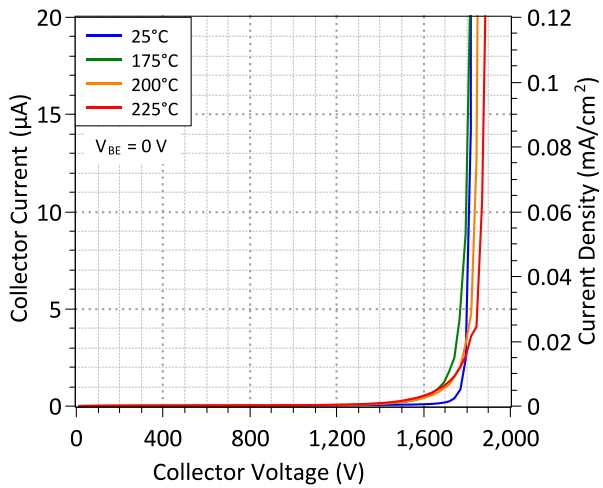

- Current Gains in excess of 100
- R_{on} (25°C) = 2.3 mΩ-cm²
- Positive temp co-efficient of $V_{CE,sat}$
- Low leakage, BV_{CES} even at T>200°C

1200 V/50 A Switching Waveforms on 1700 V/20 mOhm SJT

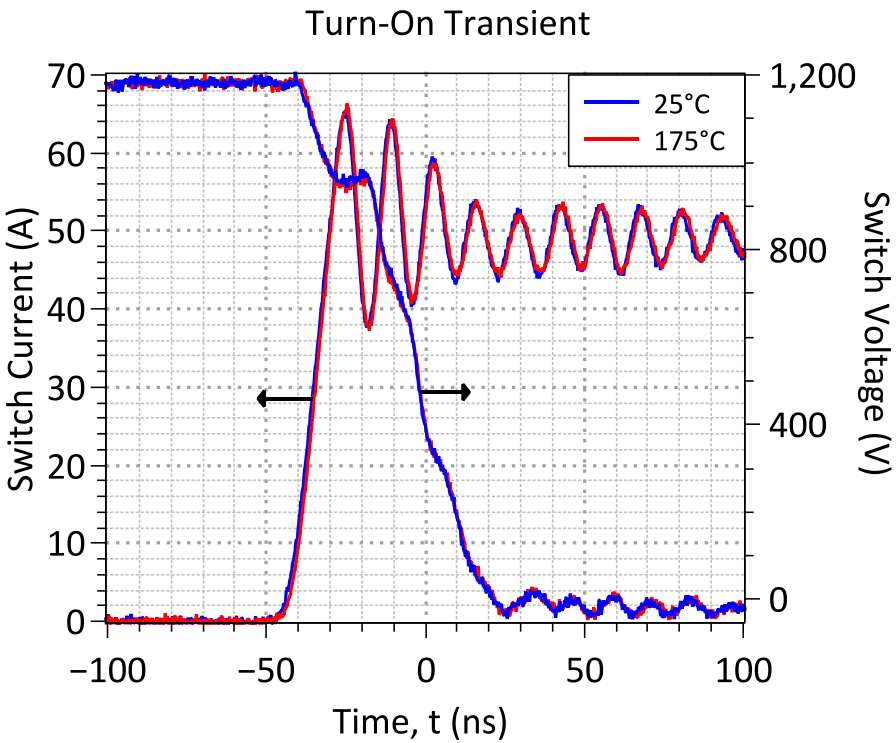

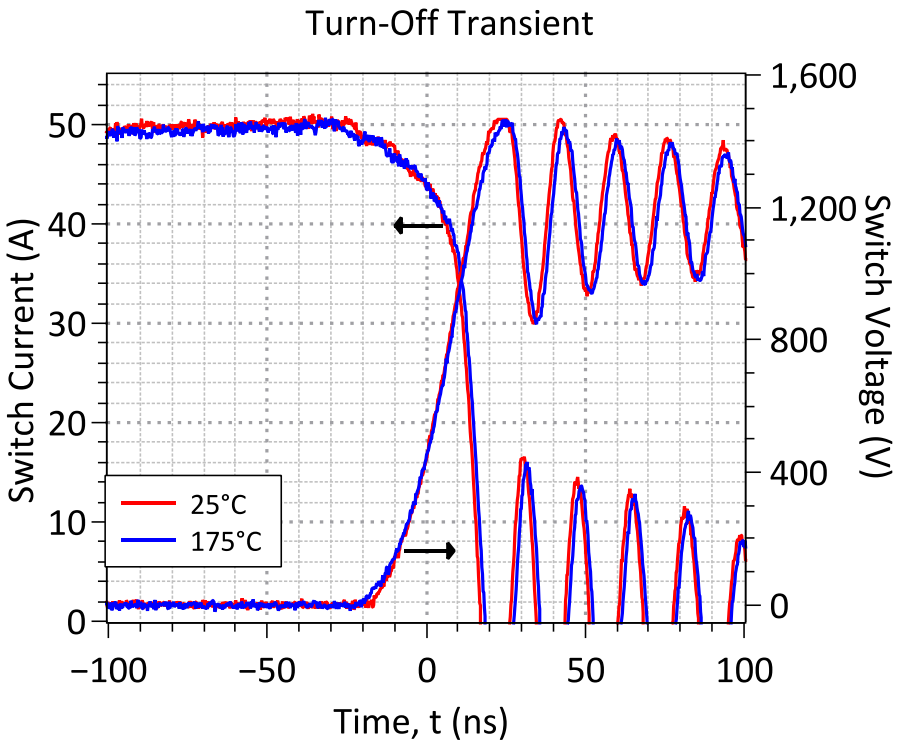

- Switching 50 A at full rated voltage (1200 V)
- Sub-50 ns switching transients (need additional care to avoid ringing)
- Temperature invariant switching behavior confirms lack of minority carrier storage in Collector region.

What Controls SJT Switching Speed?

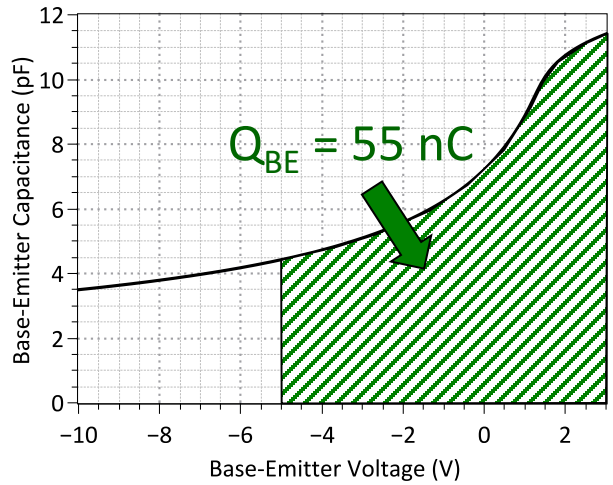

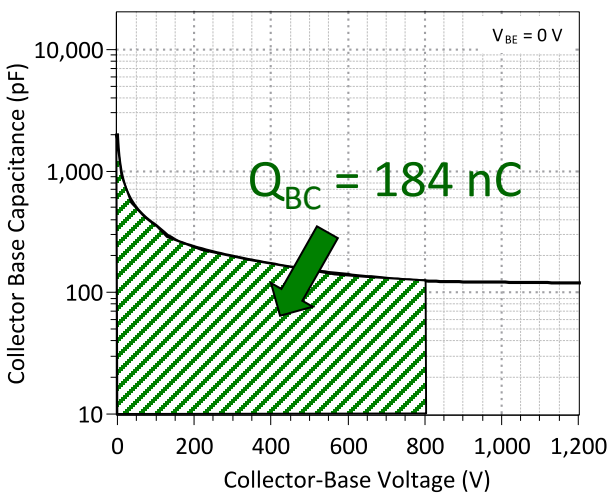

- $Q(I_B) \approx Q_{BE}(-5..3V) + Q_{CB}(0..800\ V)$

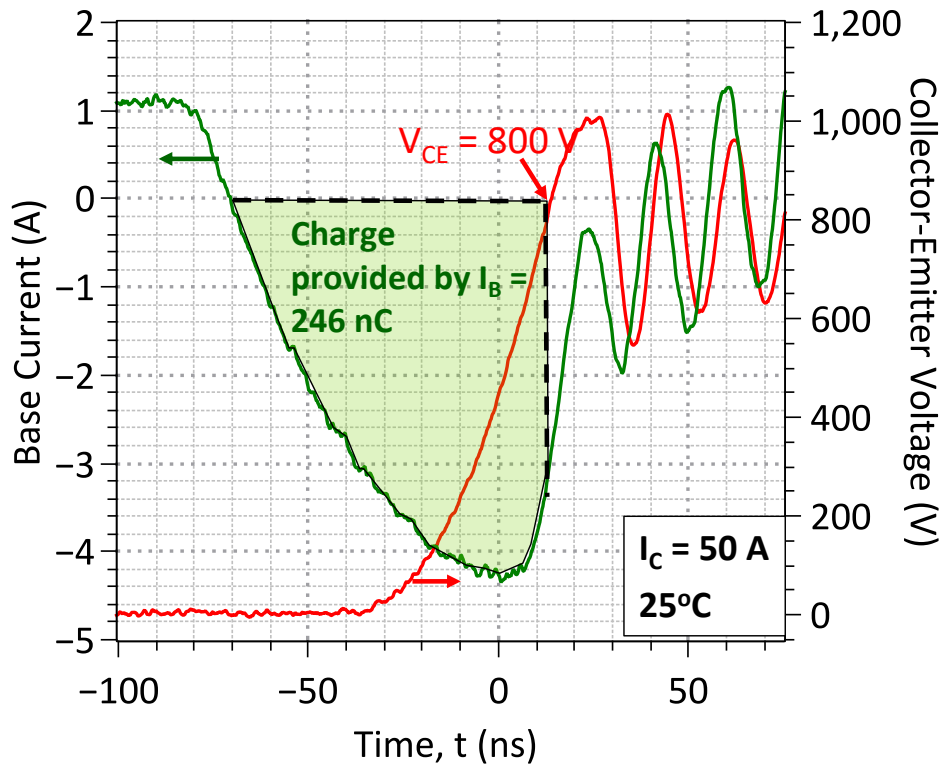

- SJT Switching speeds are **solely limited** by terminal capacitances

High Voltage DC (HVDC) Full Bridge Bread Board

Control and Driver Circuit

Transformer

Secondary Rectifiers and Filters

Input DC

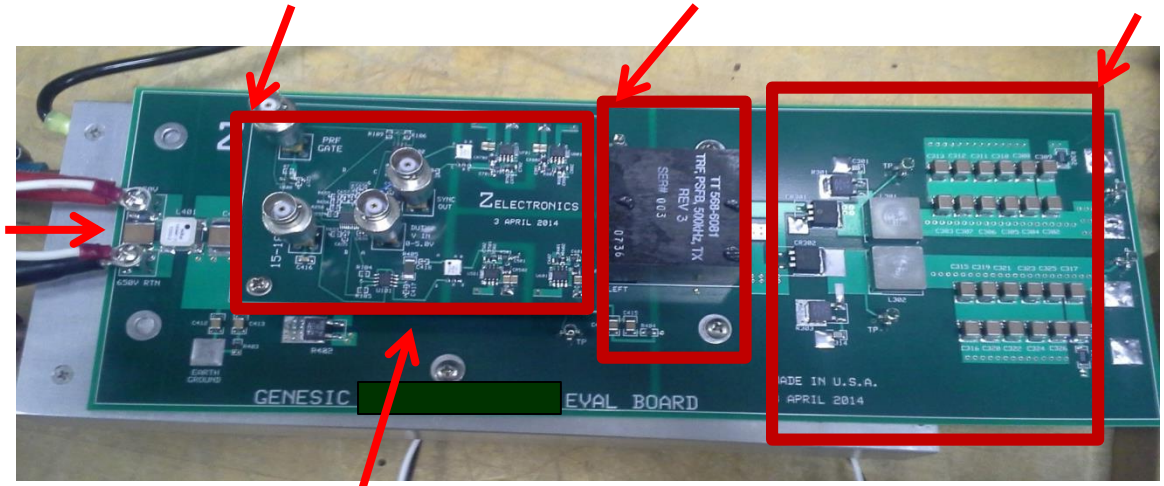

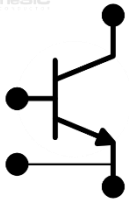

Full Bridge with GeneSiC SJT (PN: GA20SICP12-263) Underneath

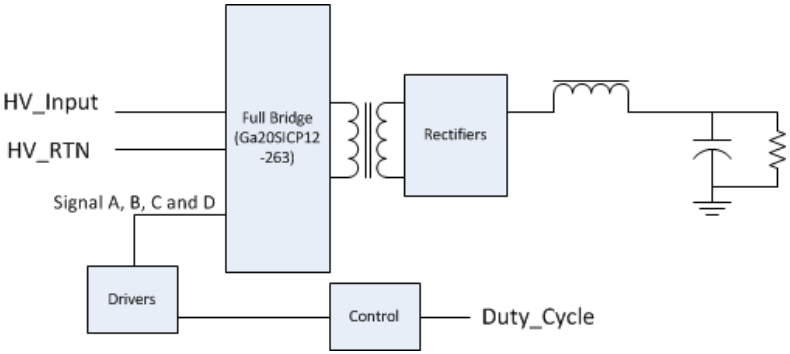

Side-View

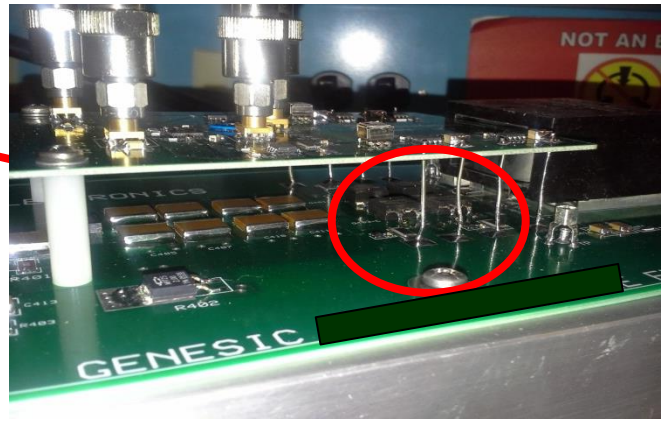

800V Input 500KHz (1MHz interleaved) Switching Full Bridge Test

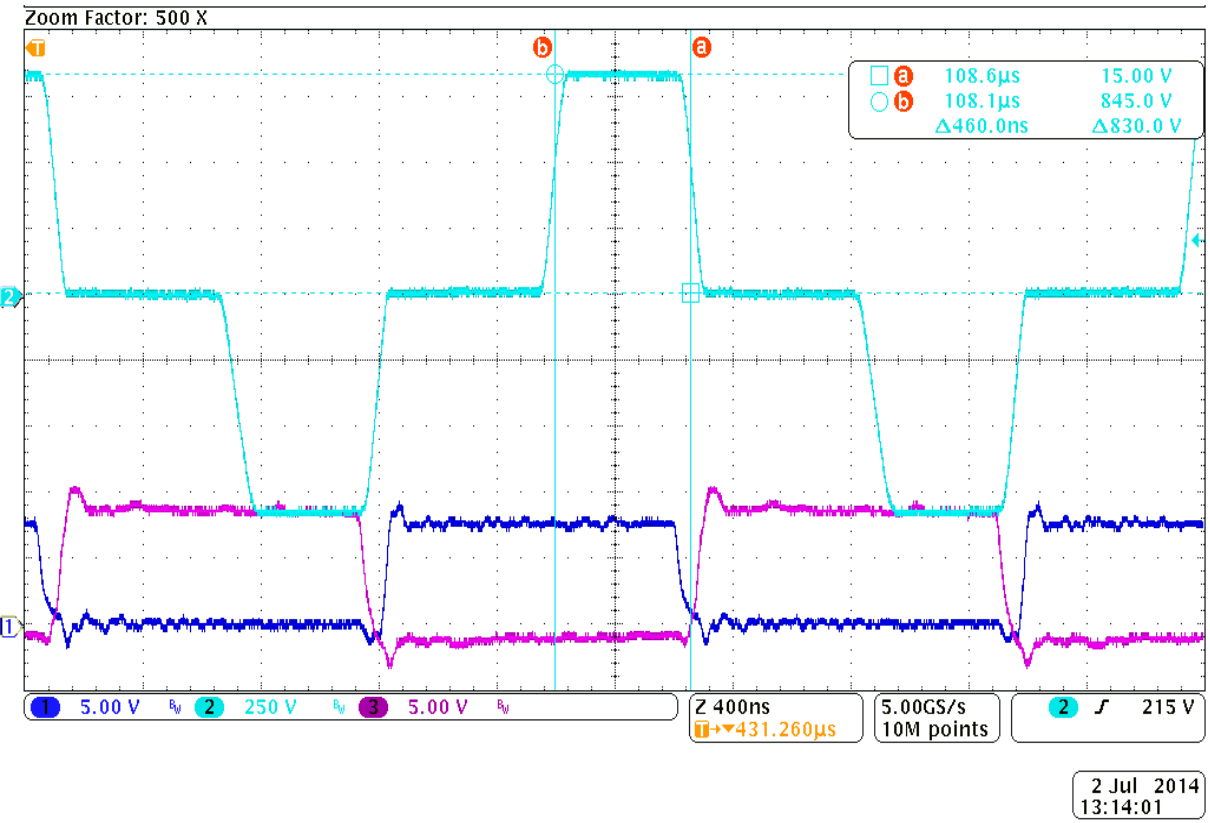

- Input 800V
- Open loop –duty cycle 42%
- Channel 1 is control drive signal C
- Channel 2 is Full bridge voltage waveform.
- Channel 3 is control drive signal D

Issues with Existing Silicon technologies IGBTs; SiC Enabler

- MOSFET has limited voltage ratings
- MOSFET has lower Vgs maximum rating.
- MOSFET has higher Rds_on at high temperature.
- IGBT is limited switching frequency (<100KHz)

- GeneSiC's SiC devices enables higher input voltage operation at high switching frequency and fast rise time.
- It presents high voltage DC down conversion for solar, industrial HVDC bus applications.
- It proves high voltage and switching performance and is ready for implementation a complete power converter design.

Energy Efficient Infrastructure Elements

- Power Conversion for more efficient Datacenters, EV chargers and Industrial Buildings
- **Auxilliary Power supplies and 1700 V SiC switches using simplified Flyback Circuits**
- Inverters for Motor Drives
- SiC devices and configurations for Utility Grid-voltage applications
- Conclusions

Flyback Inverters and Power Supplies

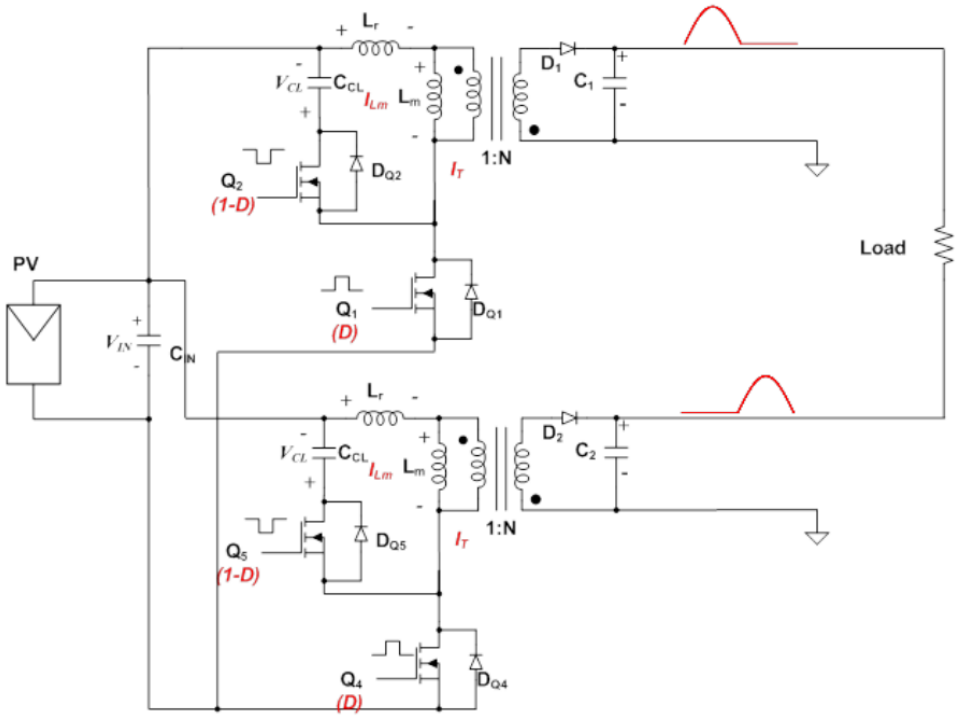

- Flyback Circuits offer significant advantages (Isolation through Xformer, Minimal energy storage, Can be made Bi-directional)
- Disadvantage: Switch voltage >2 DC Voltage => for 400 Bi-directional DC-DC, Switch needs to be >850 V rated

SiC Junction Transistors Offer Significantly Higher Efficiency, Simpler Flyback Circuits

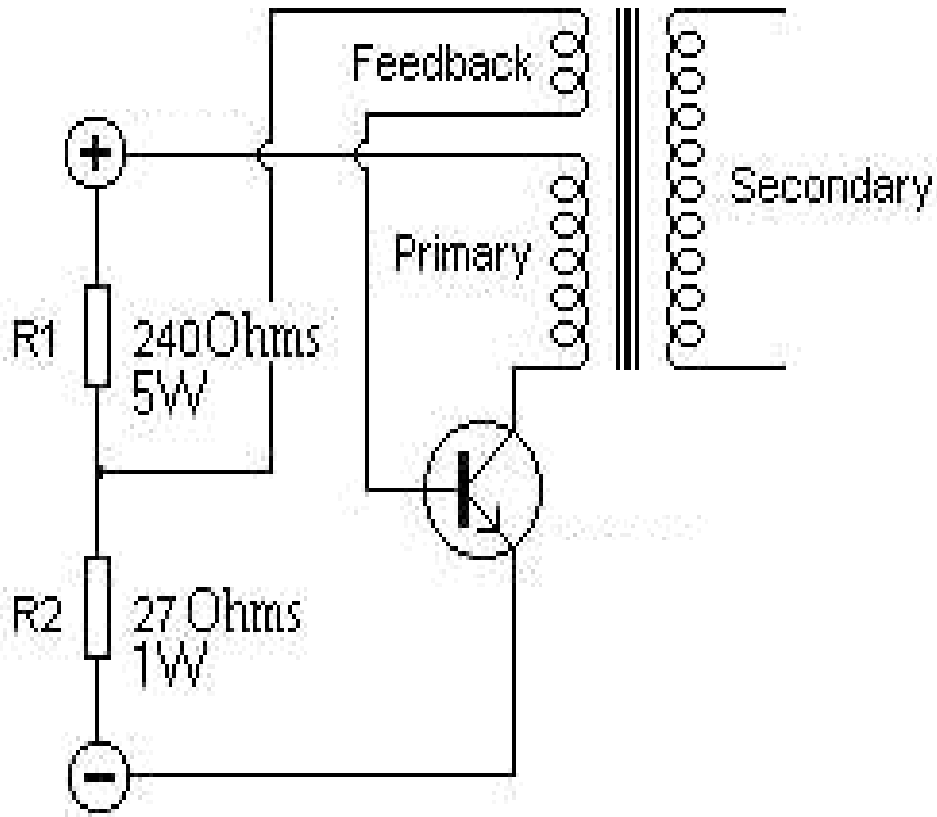

- Generally, these are low power (<500W) power supplies with low current (<5A) ratings
- SJTs can be driven using feedback from Transformer and <10 V drive circuits
- High Voltage/Low Cost/Low conduction losses offer significant value to these applications

1700 V SJT-Si IGBT Output Characteristics

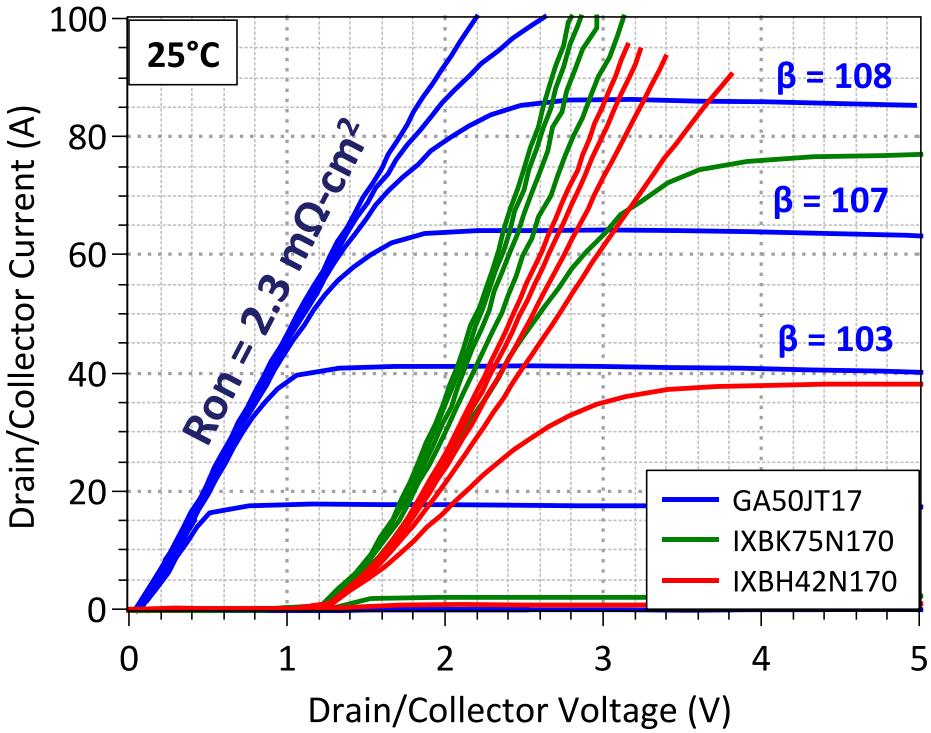

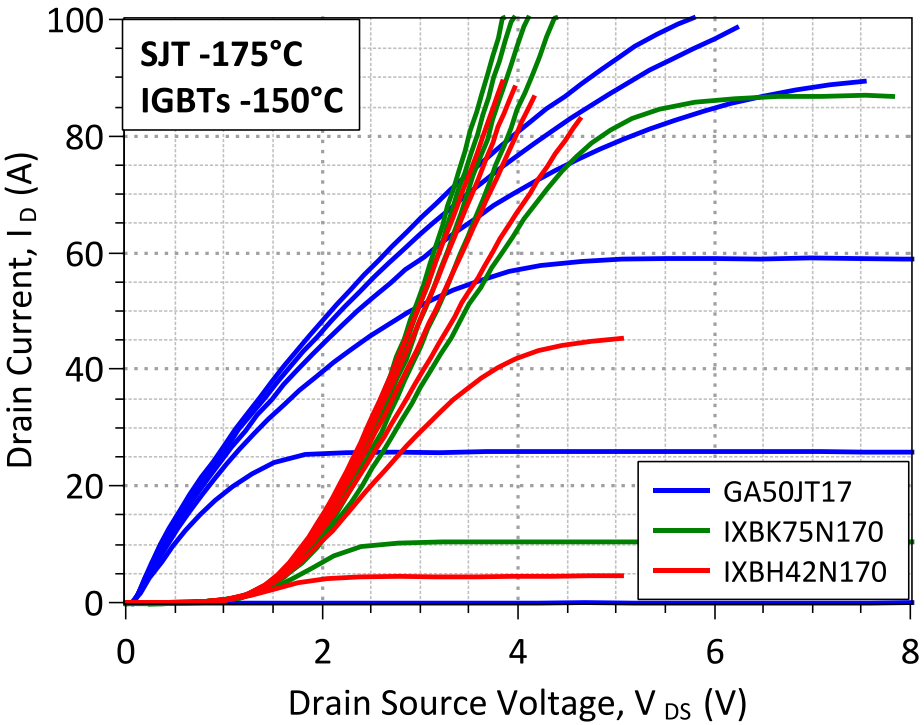

- Benchmarked with best-in-class 40-75 A 1700 V Si IGBTs
- The SJT's V_F is 50% lower than either IGBT at high operating temperatures

Conduction Loss Comparison 1700 V SJT with Si IGBTs

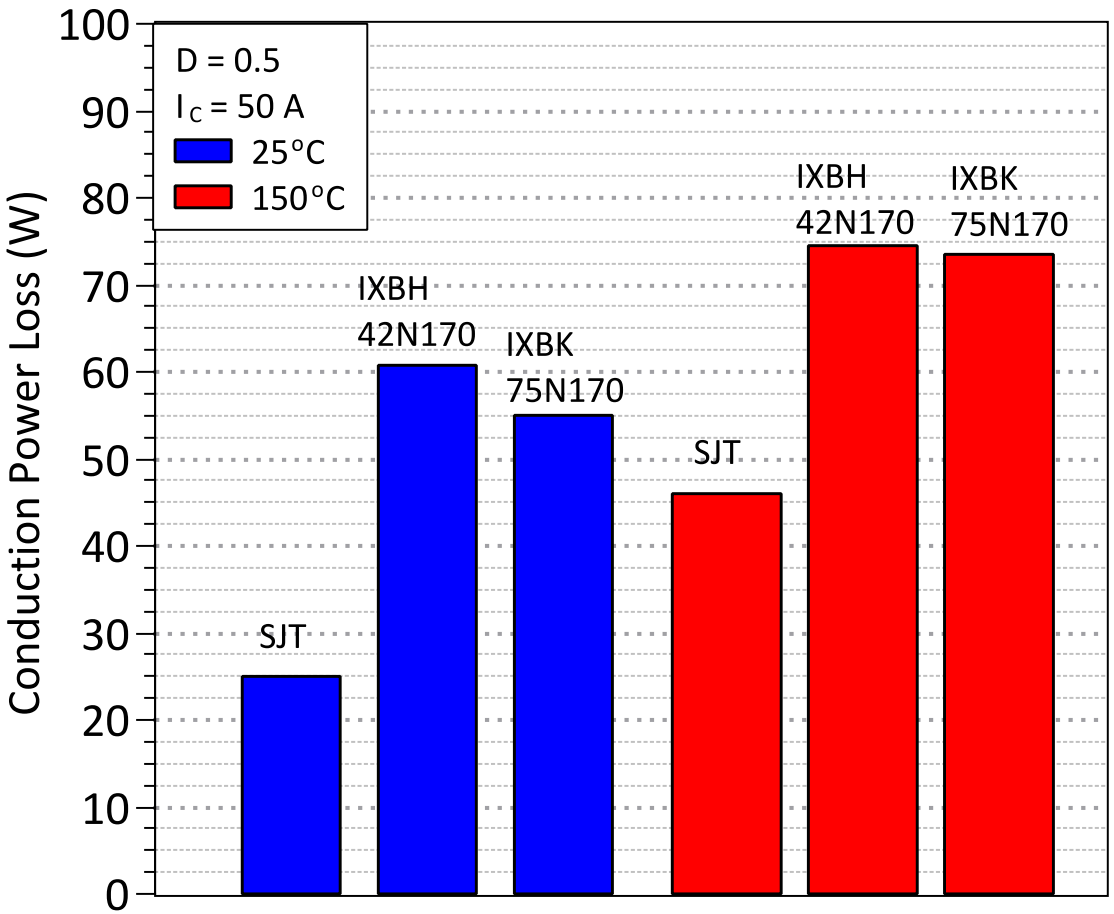

- The conduction power loss of the SiC SJT is 2.2x smaller than the best Si IGBT during 150°C operation

Blocking Characteristics 1700 V SJT with Si IGBTs

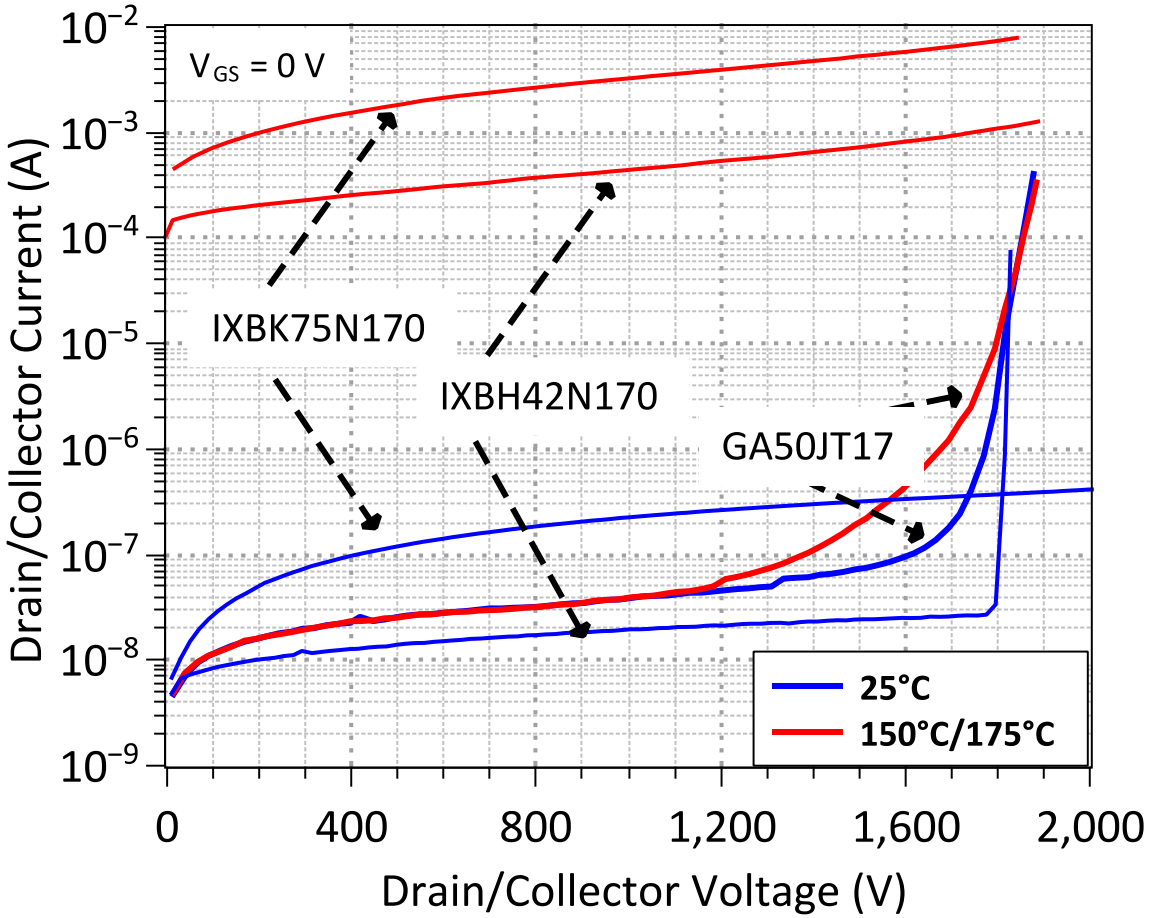

- The SJT's leakage current increases marginally from 200 nA at 25°C to 1.5 µA at 175°C.
- On the other hand, the IGBT leakage currents are in the mA range at 150°C
  - Excessive off-state power loss > 5 W estimated

Turn-off Comparison 1700 V SJT with Si IGBTs

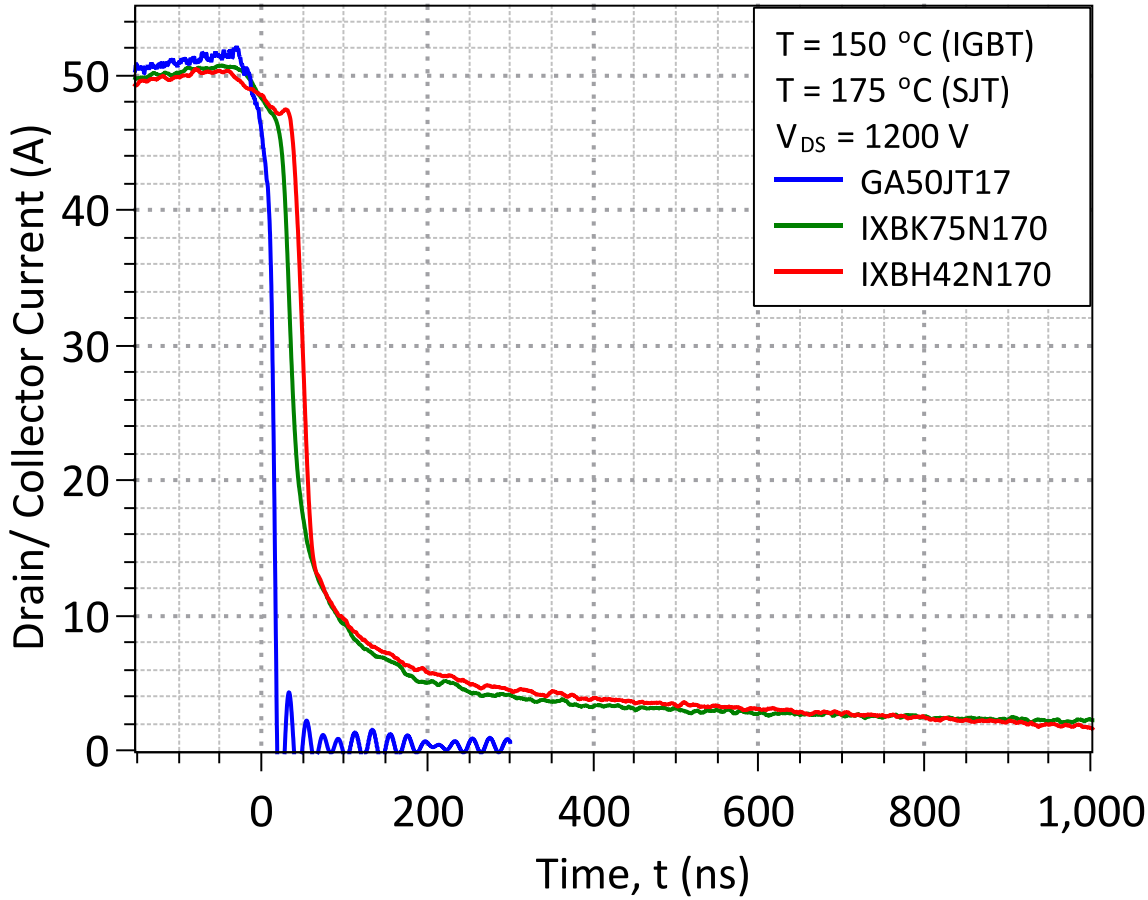

- SJT shows MOSFET-like fast turn-off waveforms, due to unipolar operation
- The bipolar IGBTs feature a long tail current, which increases the switching losses

Switching Energy Loss Comparison 1700 V SJT with Si IGBTs

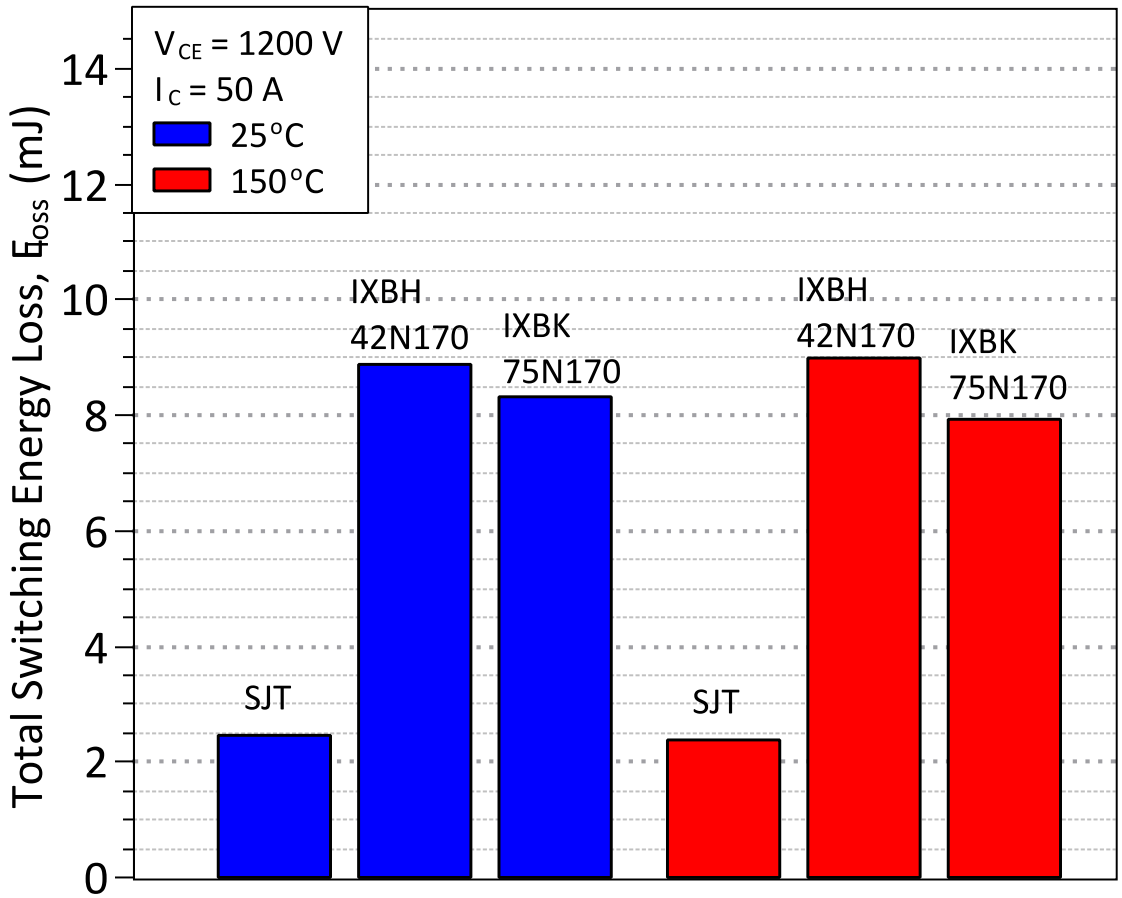

- SiC SJT offers the lowest switching energy loss at all temperatures due to:
  - Small chip size
  - Lack of minority charge storage, also resulting in temperature invariant switching
- ~4x higher switching energy loss measured on the Si IGBTs.

Energy Efficient Infrastructure Elements

- Power Conversion for more efficient Datacenters, EV chargers and Industrial Buildings
- Auxilliary Power supplies and 1700 V SiC switches using simplified Flyback Circuits
- **Inverters for Motor Drives**
- SiC devices and configurations for Utility Grid-voltage applications
- Conclusions

Avalanche Ruggedness – Unclamped Inductive Switching

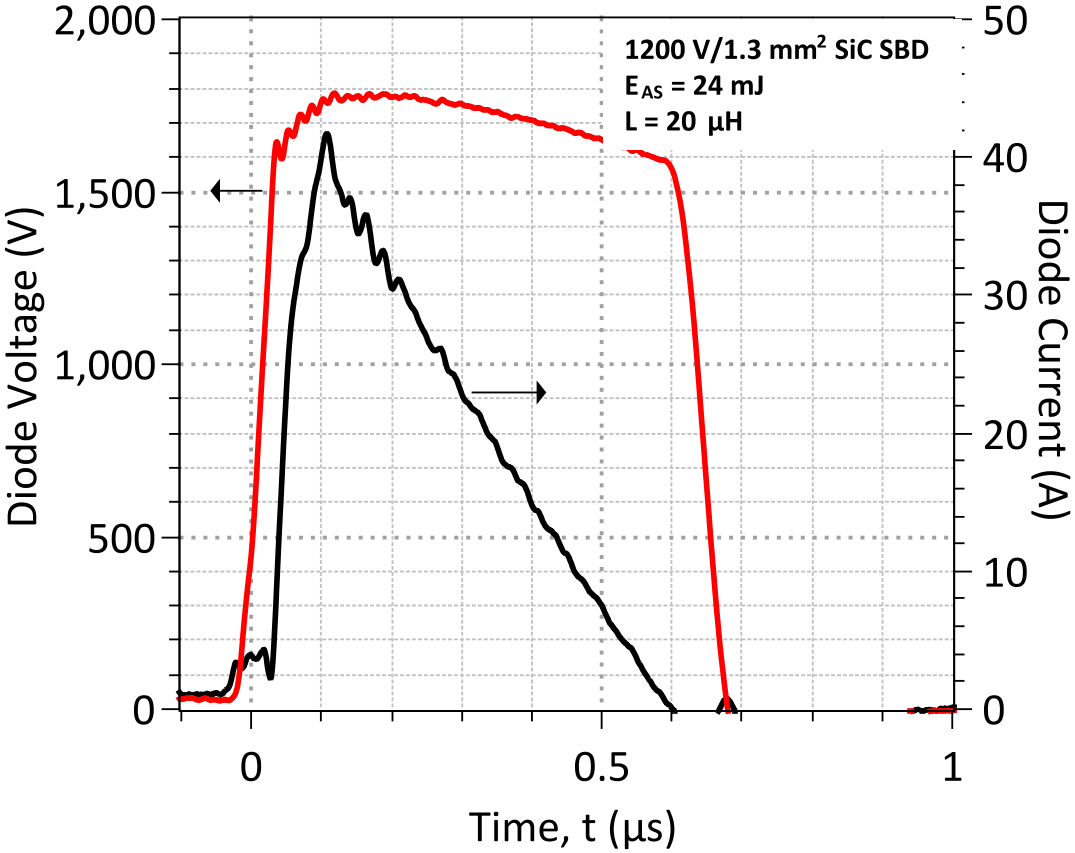

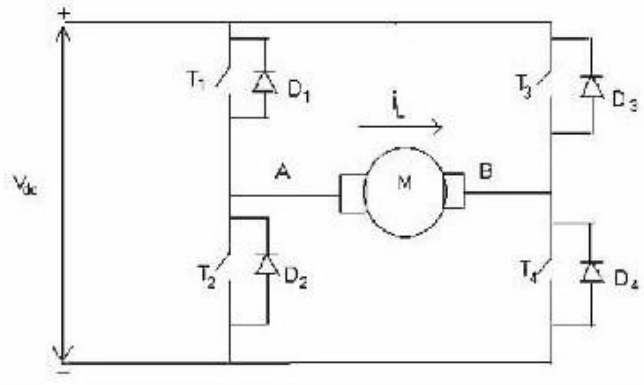

- UIS Energy of 47 mJ (6.1 J/cm^2) measured
- Optimized design supports avalanche currents 42 A
  - > 20x rated currents

Short Circuit Ruggedness

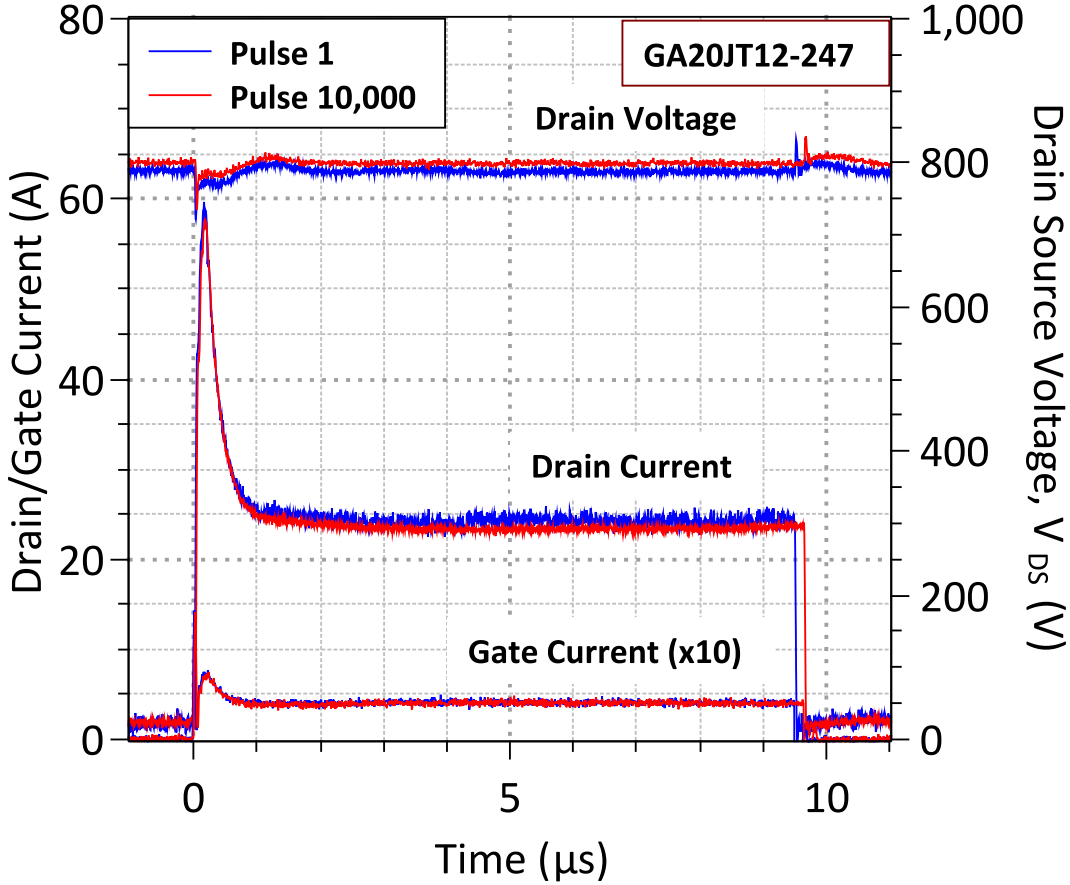

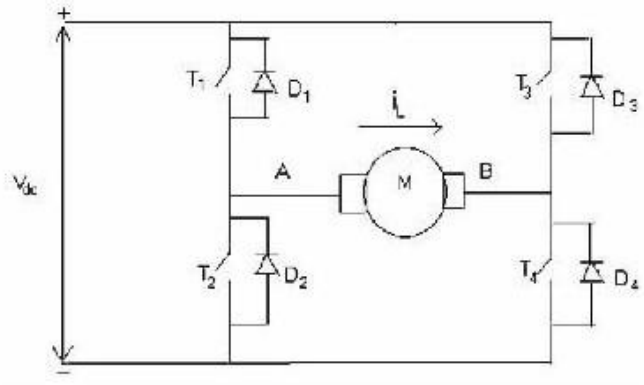

- Simultaneous application of operating voltage and full, rated current
- >10 µsec short circuit testing successful

Utility Grid Applications (eg. Intelligent Universal Transformer)

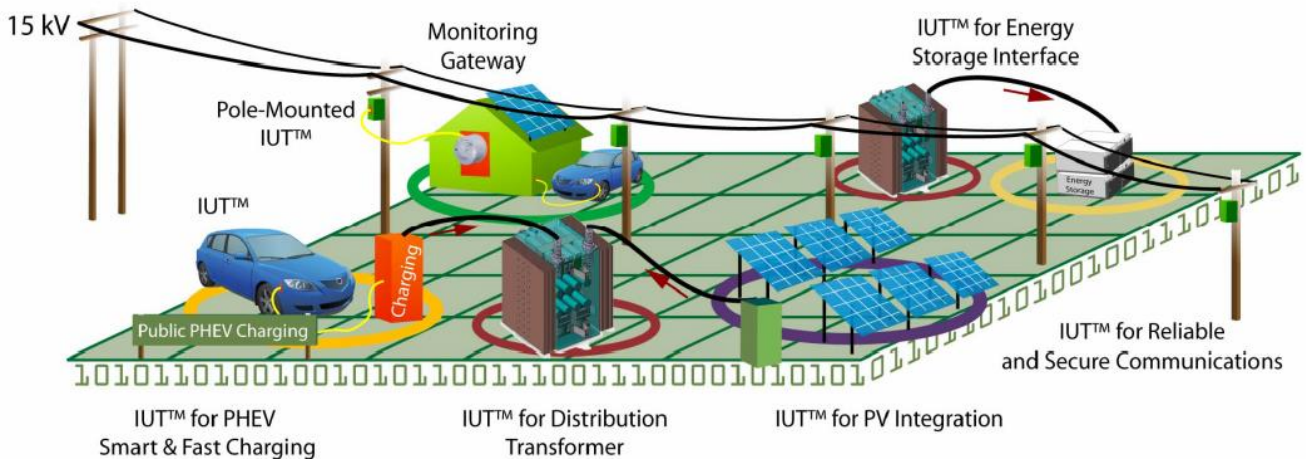

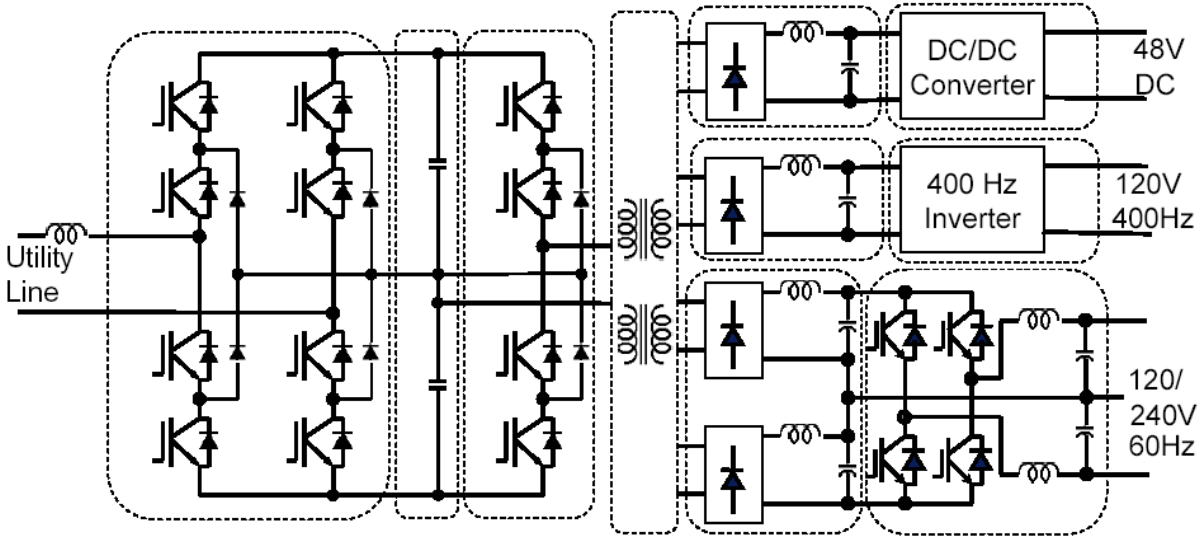

Courtesy: Prof. Lai, Virginia Tech

10 kV BJT Blocking I-V Characteristics

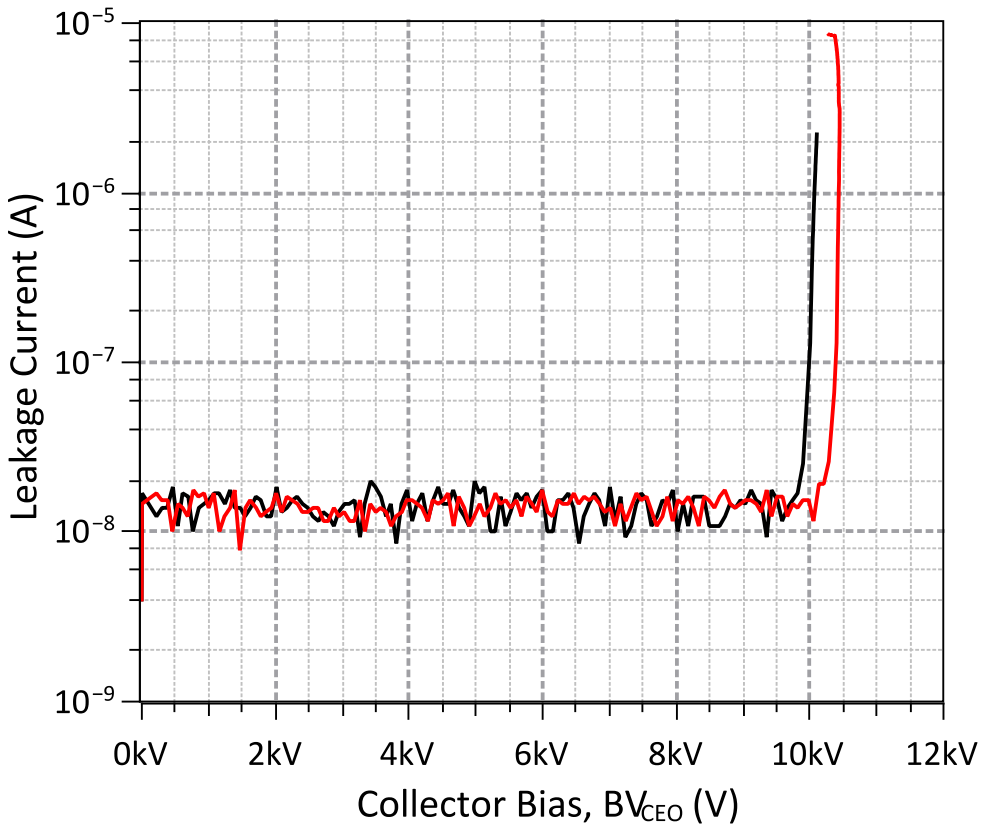

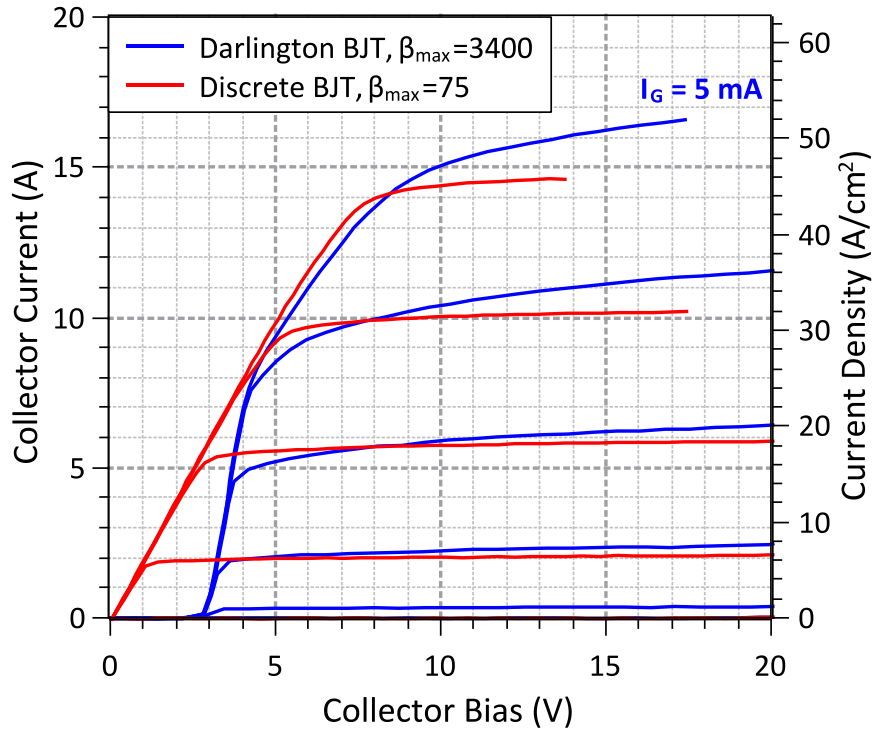

7.3 mm x 7.3 mm BJTs (active area = 28 mm^2)

5 kV/8 A BJT Inductive Load Switching at 150°C

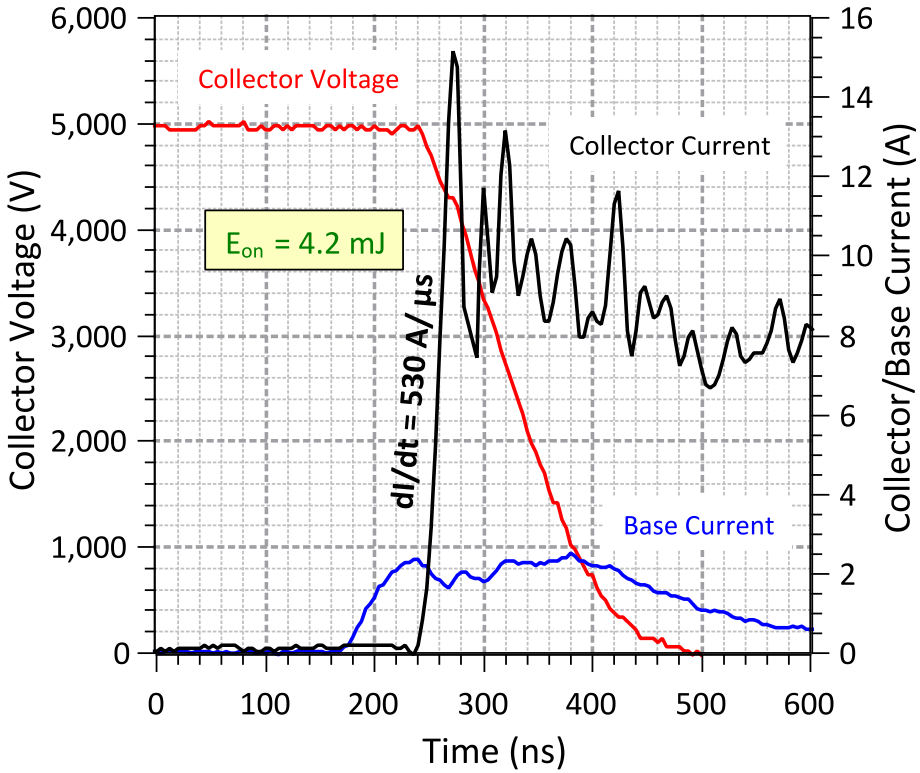

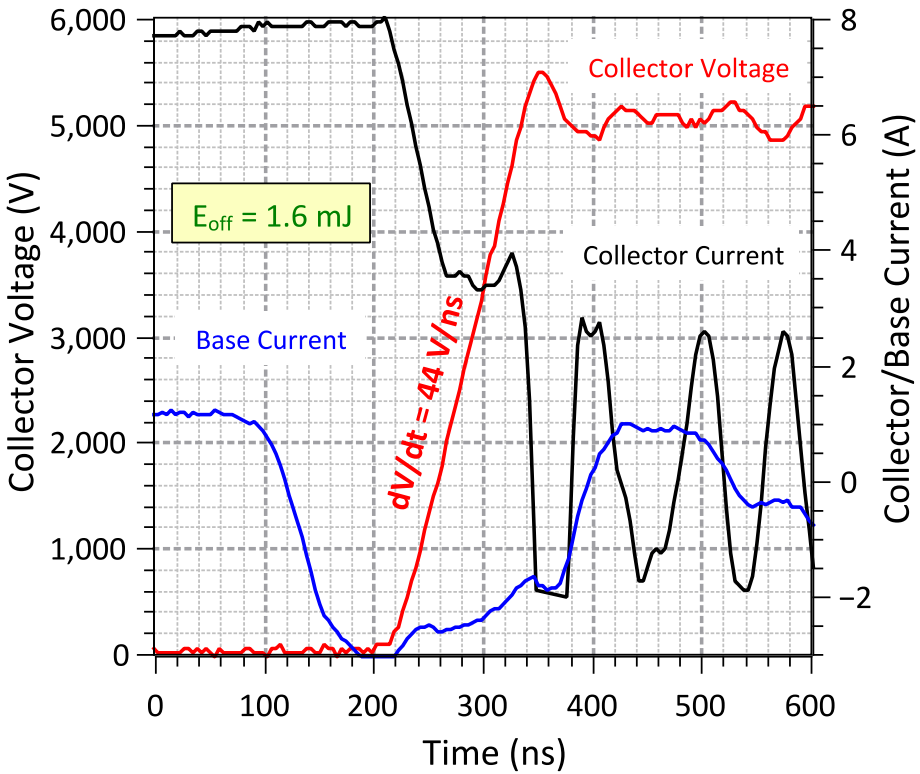

- Turn-on transition: I_C rise time < 30 ns; V_C fall time < 200 ns
- Turn-off transition: I_C fall time < 150 ns; V_C recovery time <100 ns
- Switching Speed limited by package and circuit parasitics

Temperature-invariant Switching at 5 kV

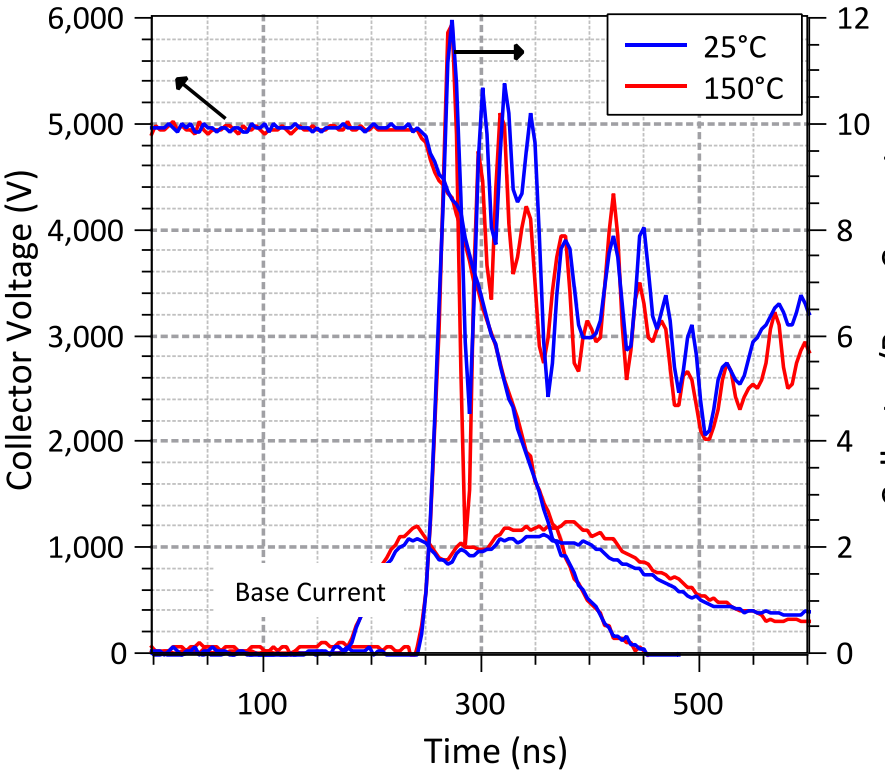

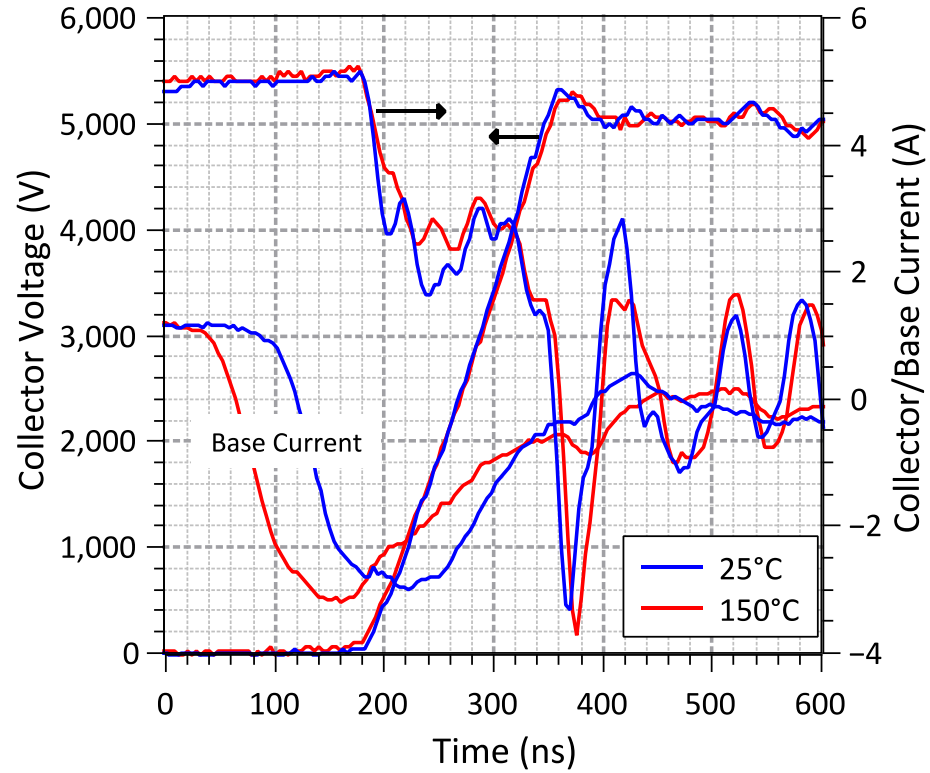

- No difference in switching performance at 25°C and 150°C
  - Confirms lack of conductivity modulation in the n- collector layer.

10 kV SiC BJT vs. 6.5 kV/25 A Si IGBT

Device	BV	I_C	Temp.(C)	$V_{CE,sat}$ (V)	Eon (mJ)	Eoff (mJ)
SiC BJT	10 kV	8 A	150°C	**6.4**	**4.2**	**1.6**
Si IGBT*	6.5 kV	10 A	125°C	4	80	40
				↑ 1.6 x	19 x ↓	25 x ↓

- SiC BJT achieves 19 x lower turn-on energy loss and 25 x lower turn-off energy loss, as compared to a commercially available 6.5 kV/25 A Si IGBT

* Si IGBT switching data sourced from device datasheet

Short Circuit Ruggedness

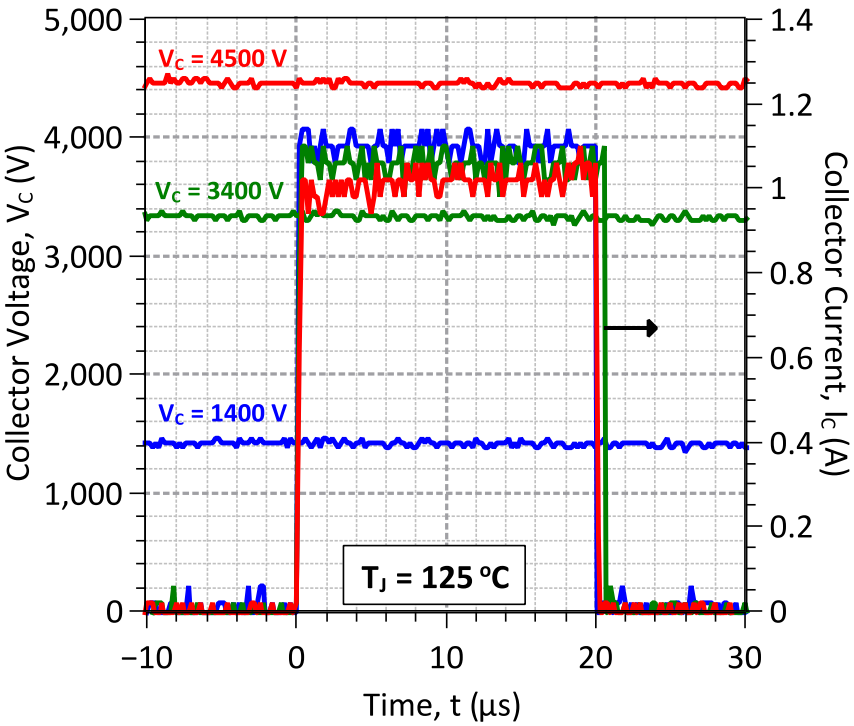

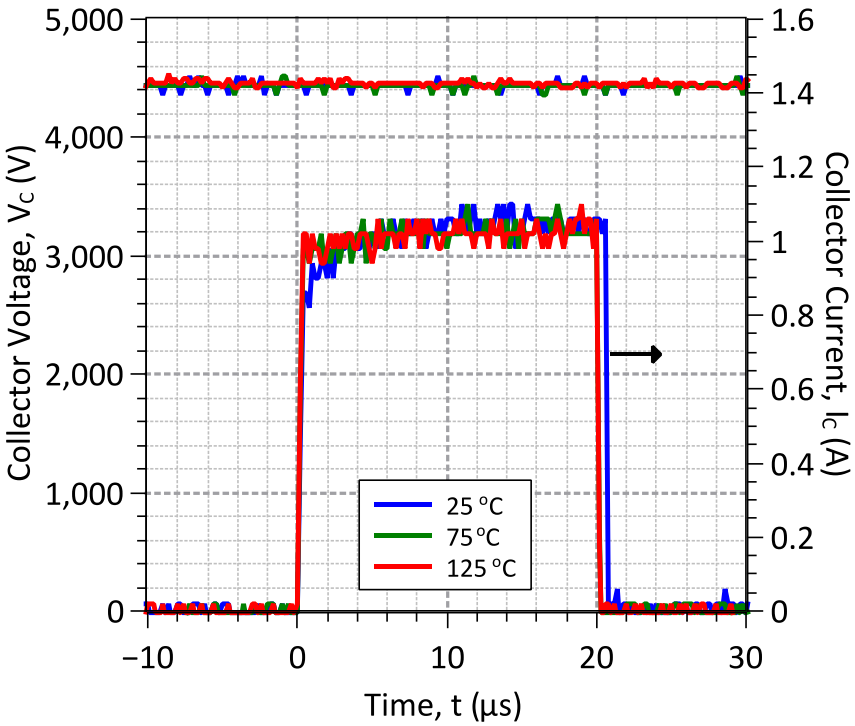

- 3.65 mm x 3.65 mm SiC BJT turned on to a short-circuited load at a DC link voltage of 4.5 kV.
- A short-circuit withstand time of ≥20 µs observed at V_{CE} =4.5 kV and T_C=125°C
  - Near-infinity output resistance (and Early voltage) results in V_{CE} invariance of I_{SC}

Series Connection of SiC devices – a Cheaper Solution Available Right now

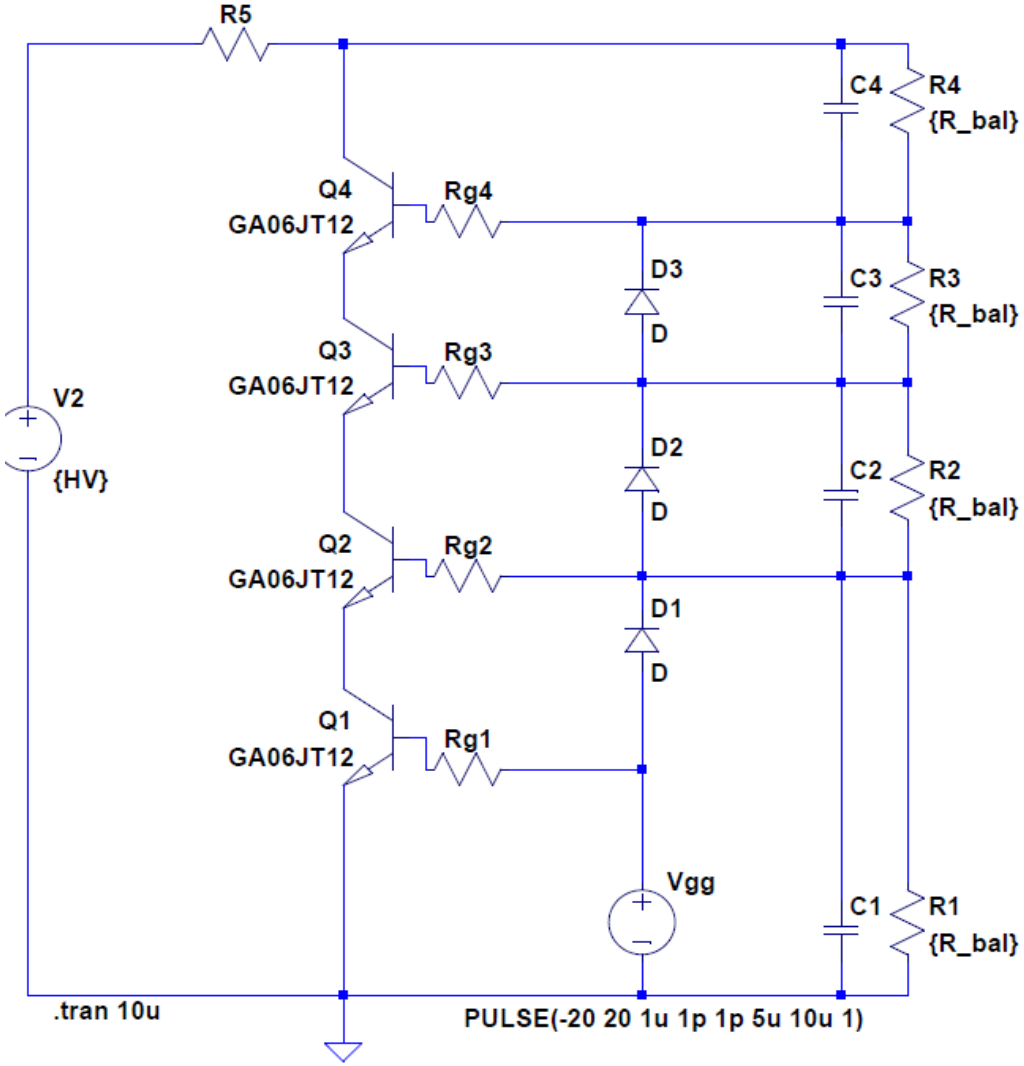

- High speed of SiC Switches allows easier series connection
- Avalanche rated devices easier to connect with no snubbers
- 1700 V/10 mOhm SJTs already available, making 6500 V/35 A transistors easily possible
- Auxilliary Power Supplies in 4160 3Φ AC systems

SiC Junction Transistors

SiC Junction Transistors				
Rated Blocking Voltage (V)	**Current Rating / $R_{DS(ON)}$ (mΩ)**	**TO247** 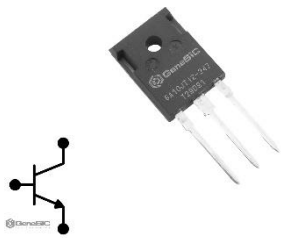	**TO-263 / D2PAK** 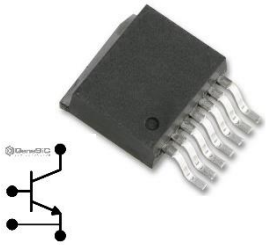	**SOT-227** 
1200	15A / 180mΩ	GA05JT12-247	GA05JT12-263	
	25A / 100mΩ	GA10JT12-247	GA10JT12-263	
	45A / 50mΩ	GA20JT12-247	GA20JT12-263	
	100A / 20mΩ	GA50JT12-247		
	160A / 10mΩ			GA100JT12-227
1700	15A / 180mΩ	GA04JT17-247		
	45A / 50mΩ	GA16JT17-247		
	100A / 20mΩ	GA50JT17-247		
	160A / 10mΩ			GA100JT17-227

GeneSiC Nationwide/Worldwide Distributors/Sales Representatives

GeneSiC Semiconductor Sales Representatives and Distributors

- Aggressive Sales and Marketing strategy adopted
- Largest network of Sales Representatives
- Top Tier distributors
- Chip-level and packaged level distribution network/ logistics

Conclusions

- SiC Devices are making significant inroads into the next generation energy efficient infrastructure, eg.:
  - Datacenters, EV chargers and Industrial Buildings
  - Auxiliary Power supplies on Flyback Circuits
  - Inverters for Motor Drives
  - Utility Grid-voltage applications using series connected and 3.3kV, 6.5kV and 10 kV devices
- Future is bright for SiC!