Examples of Applications Benefiting from the Monolithic GaN Power Stage and Redefining the State of the Art

Presented by M. de Rooij
Efficient Power Conversion

Presentation# 3523

Speaker Introduction

Michael de Rooij

Vice President of Applications at Efficient Power Conversion (EPC)

- IEEE senior member since 2003
- Ph.D. EE- Power Electronics (1998)

Agenda

- Introduction to the ePower™ stage
- 300 W $^{1}/_{16}$th Brick Converter
  - Application details
  - Experimental results
- 400 W BLDC Motor Drive
  - Application details
  - Experimental results
- Conclusion

Introducing ePower™ Stage

EPC2152 – Monolithic GaN half-bridge with driver with bootstrap supply

- Near zero common source inductance
- Driver matched to FETs
- Thermal balancing
- Layout friendly

80 V_{DSmax}, $R_{DS(on)\_typ}$ = 10 mΩ

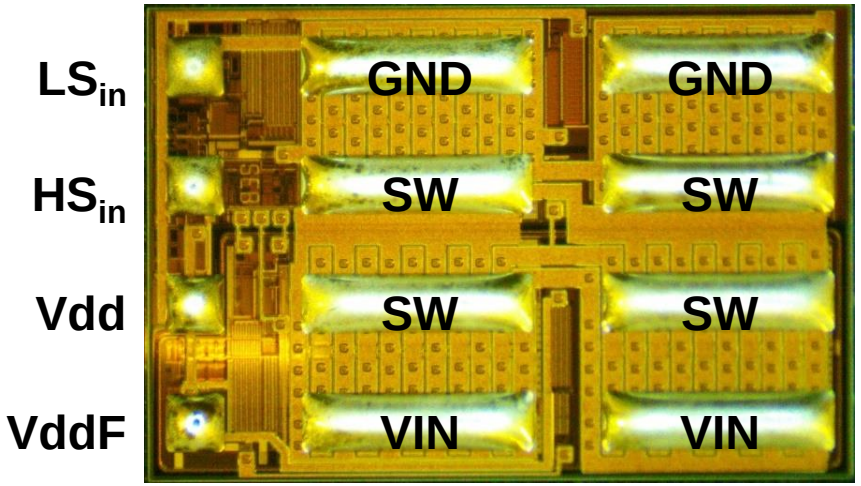

3.9 x 2.6 mm

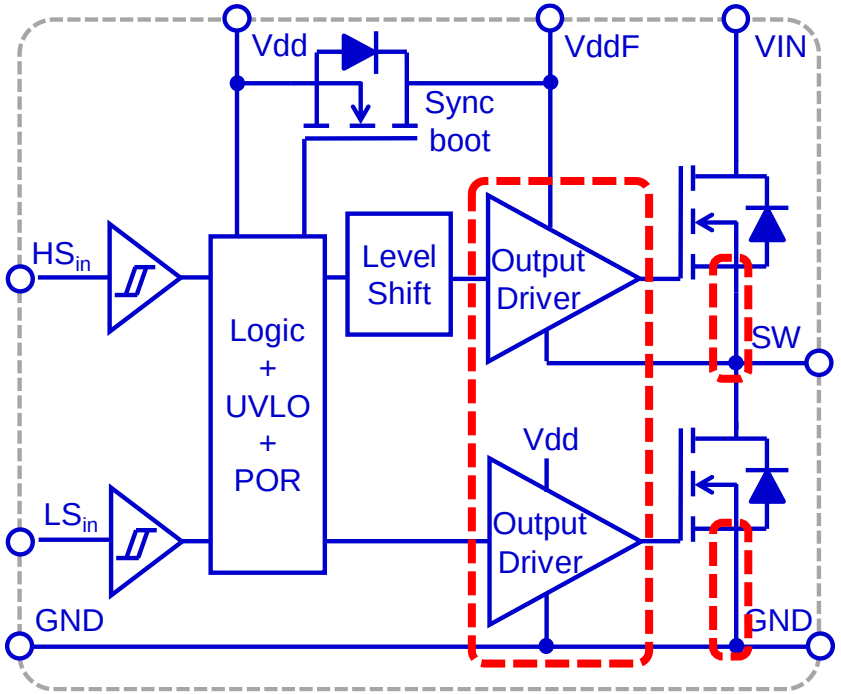

eGaN IC Application Examples

- **300 W $^{1}/_{16}$th Brick Converter**
  - Small size
  - Low component count

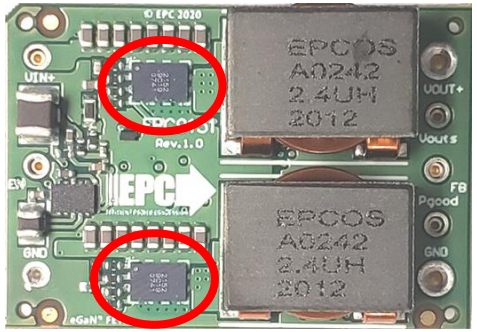

- **400 W BLDC Motor drive**
  - Quiet operation
  - Reduced input ripple
  - Higher frequency

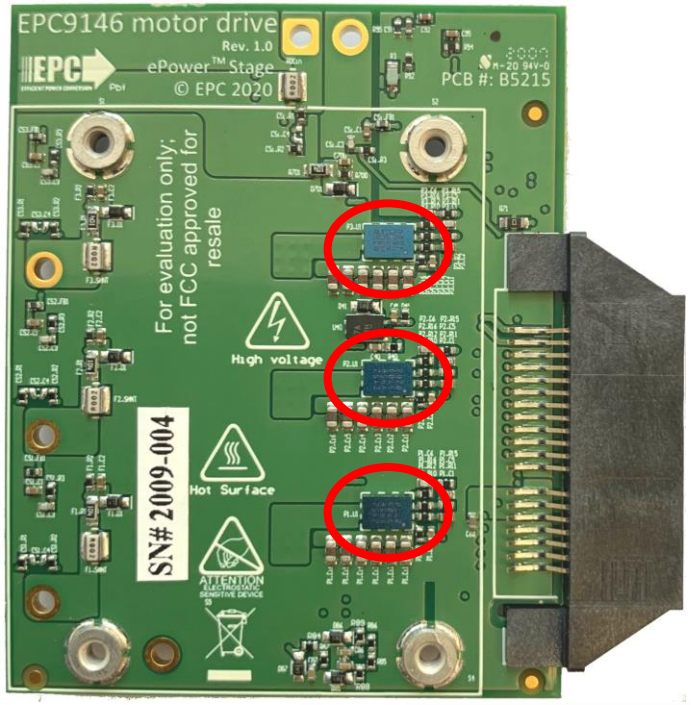

300 W $^{1}/_{16}{}^{th}$ Brick Converter

GaN Value in 48 V DC to DC Converters

With respect to MOSFETs:

- Reduced FOM ~ 4 times
- Lower Q_G ~ 5 -10 times
- Lower R_{DSon} at V_{GS} = 5 V
- Lower Q_{OSS}
- Lower Q_{GD}
- Zero Q_{RR}
- Smaller

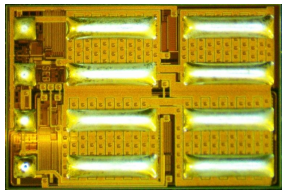

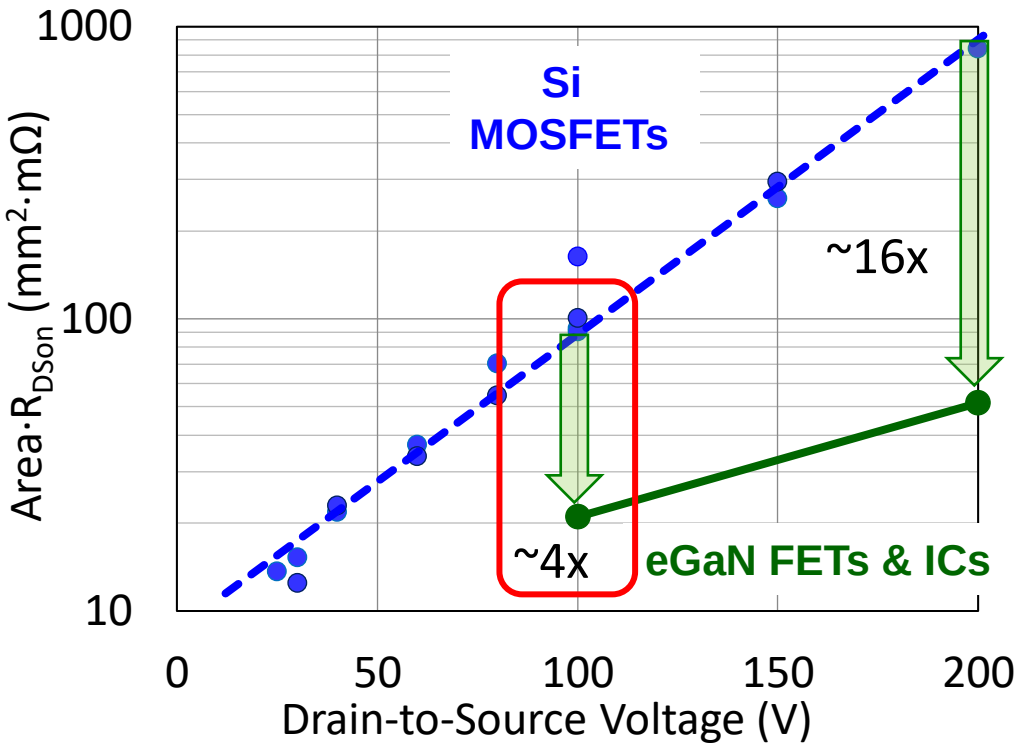

System Overview

The system comprises:

- GaN IC ePower stage
- Housekeeping power supply
- Digital controller
- Current sense amplifiers

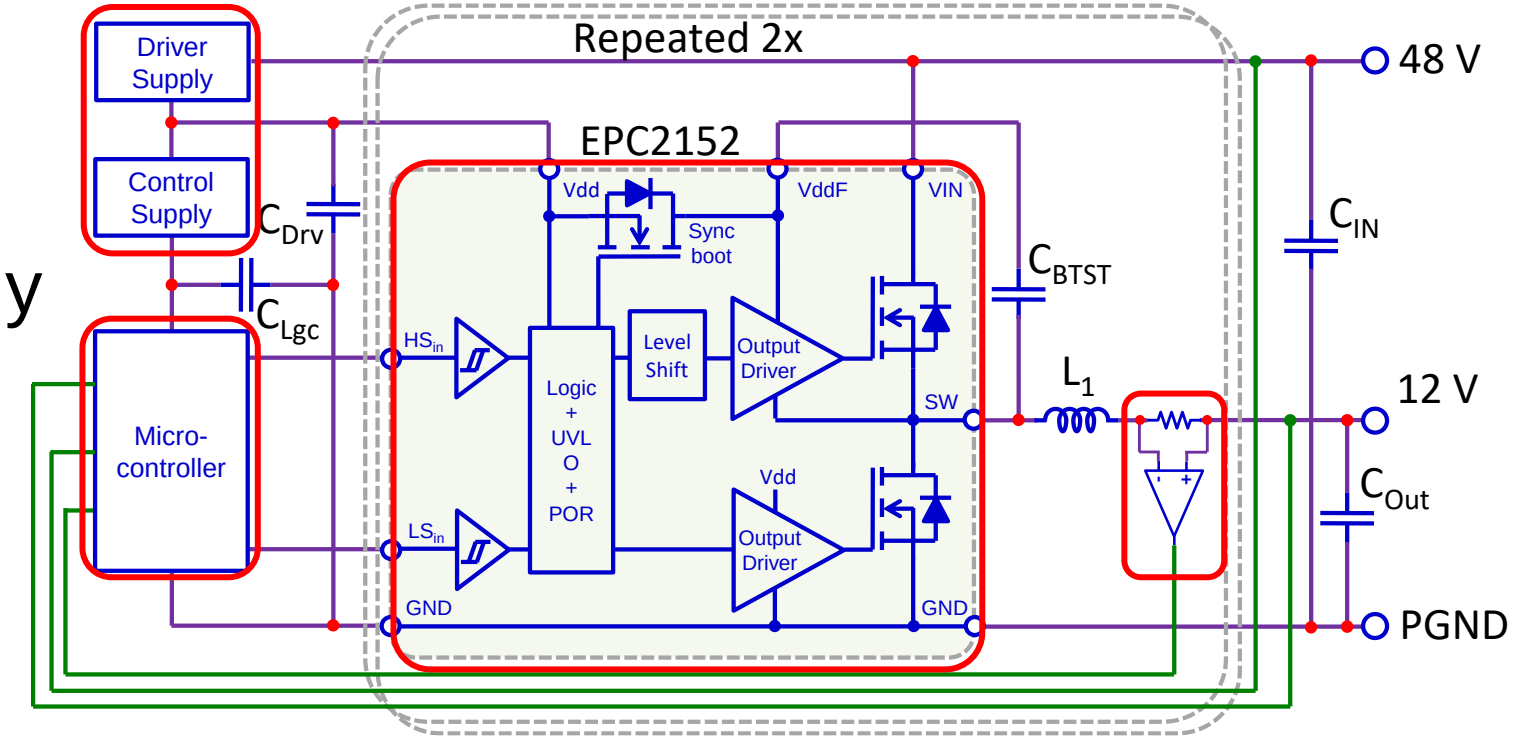

Experimental 300 W $^{1}/_{16}$th Brick Converter

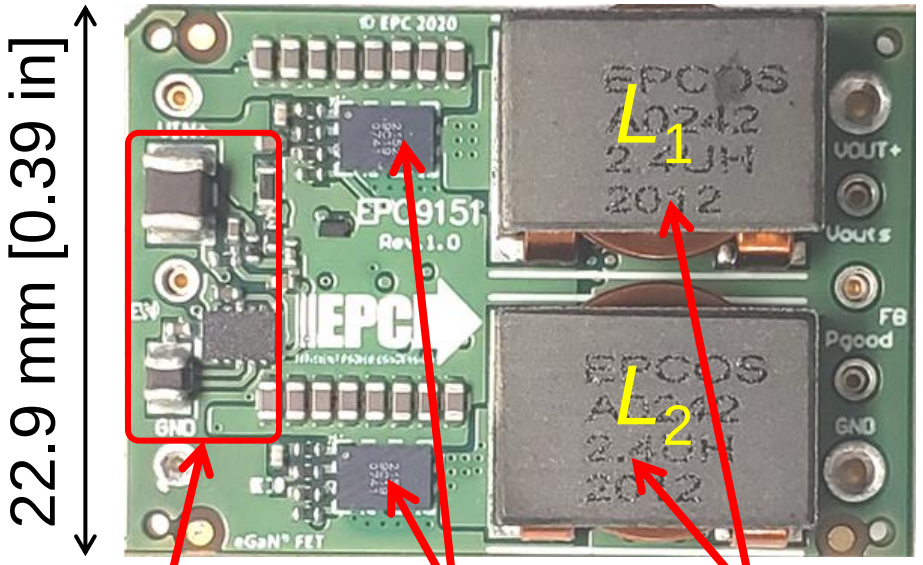

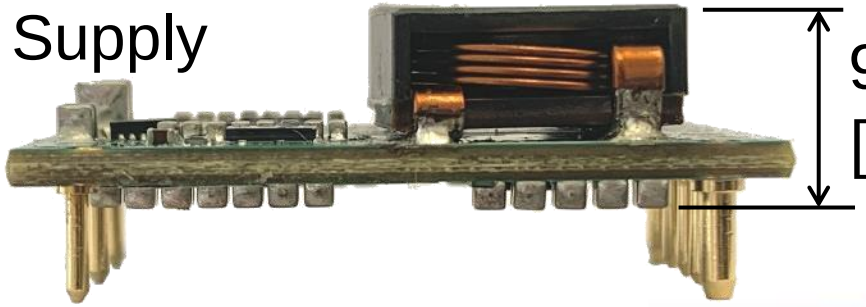

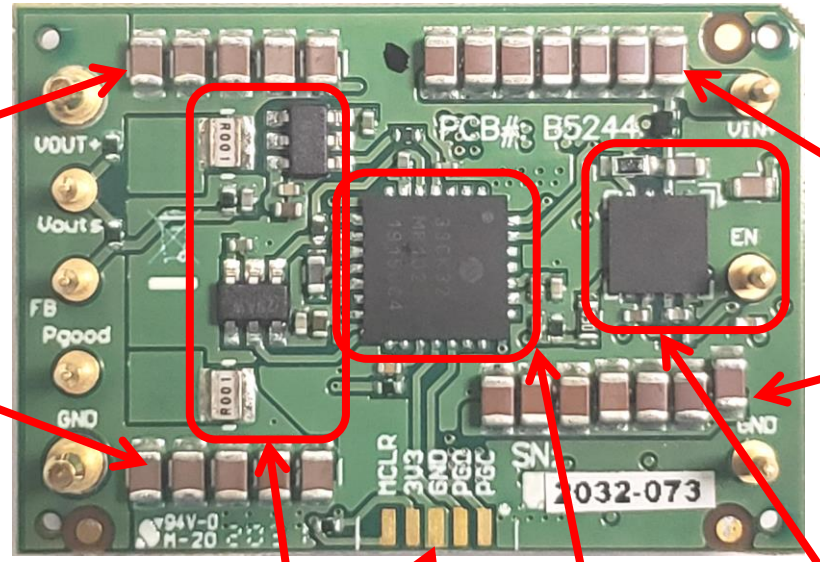

Bi-directional Conversion Efficiency

Buck operation

- 48 V_{DC} input
- 12 V_{DC} output

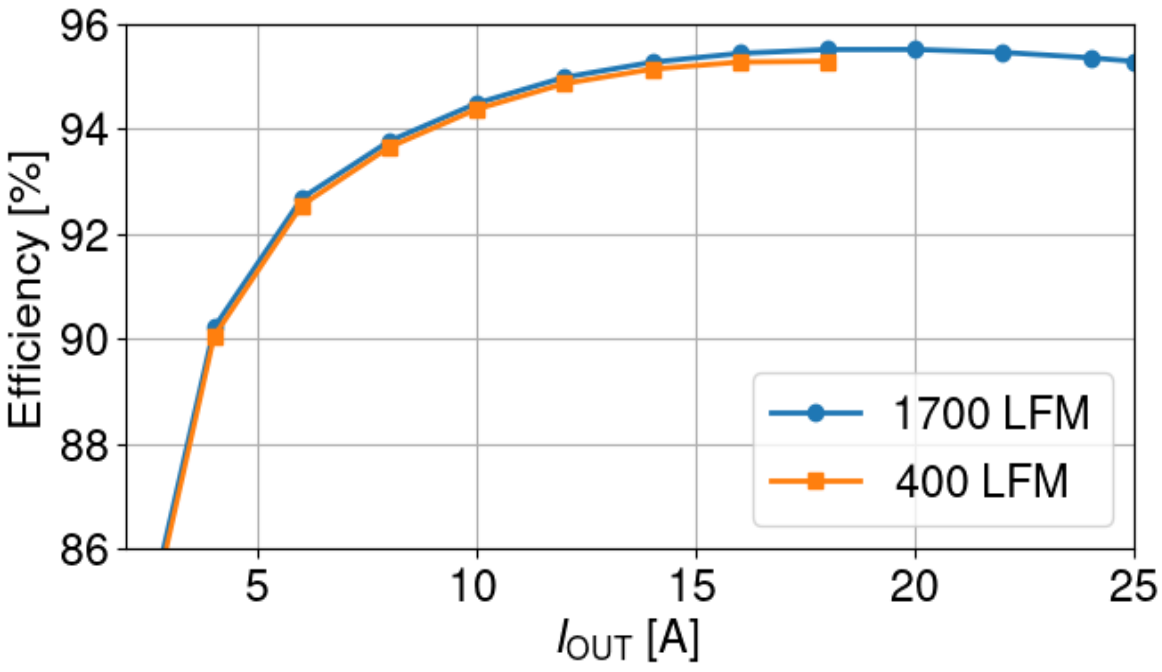

Reverse Boost operation

- 12 V_{DC} input
- 48 V_{DC} output

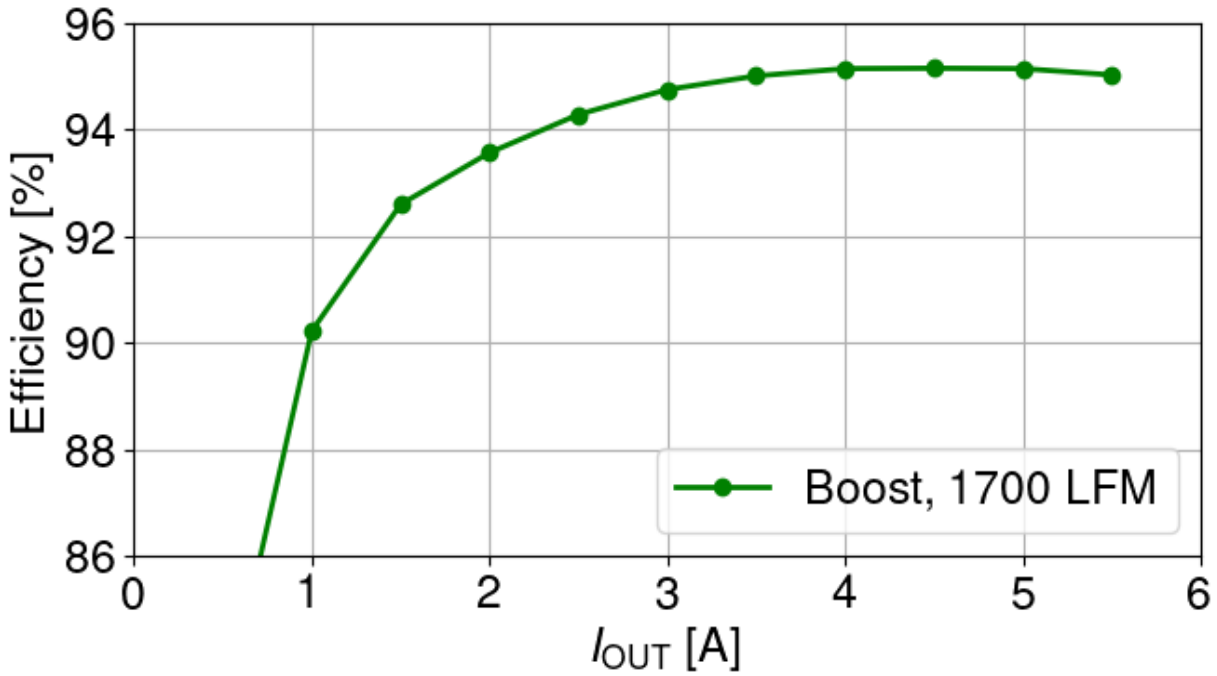

400 W BLDC Motor drive

GaN Benefits in BLDC Motor Drives

GaN FET/ICs switch fast with $Q_{RR} = 0$

Higher switching frequency

Lower dead time

- Lower distortion → lower acoustic noise
- Lower current ripple → reduced magnetic loss
- Lower torque ripple → improved precision
- Lower filtering → lower cost, weight & size.
  Can switch to ceramic capacitors
- Smaller size enables incorporation into motor housing
- Supports low inductance, higher power density motors

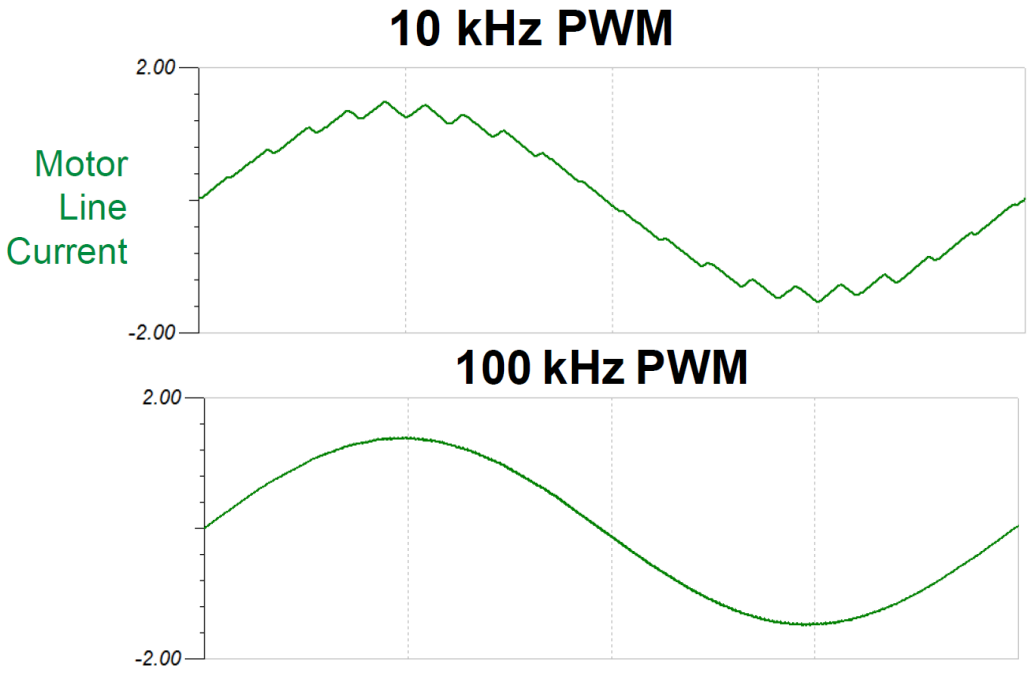

BLDC Motor Drive Overview

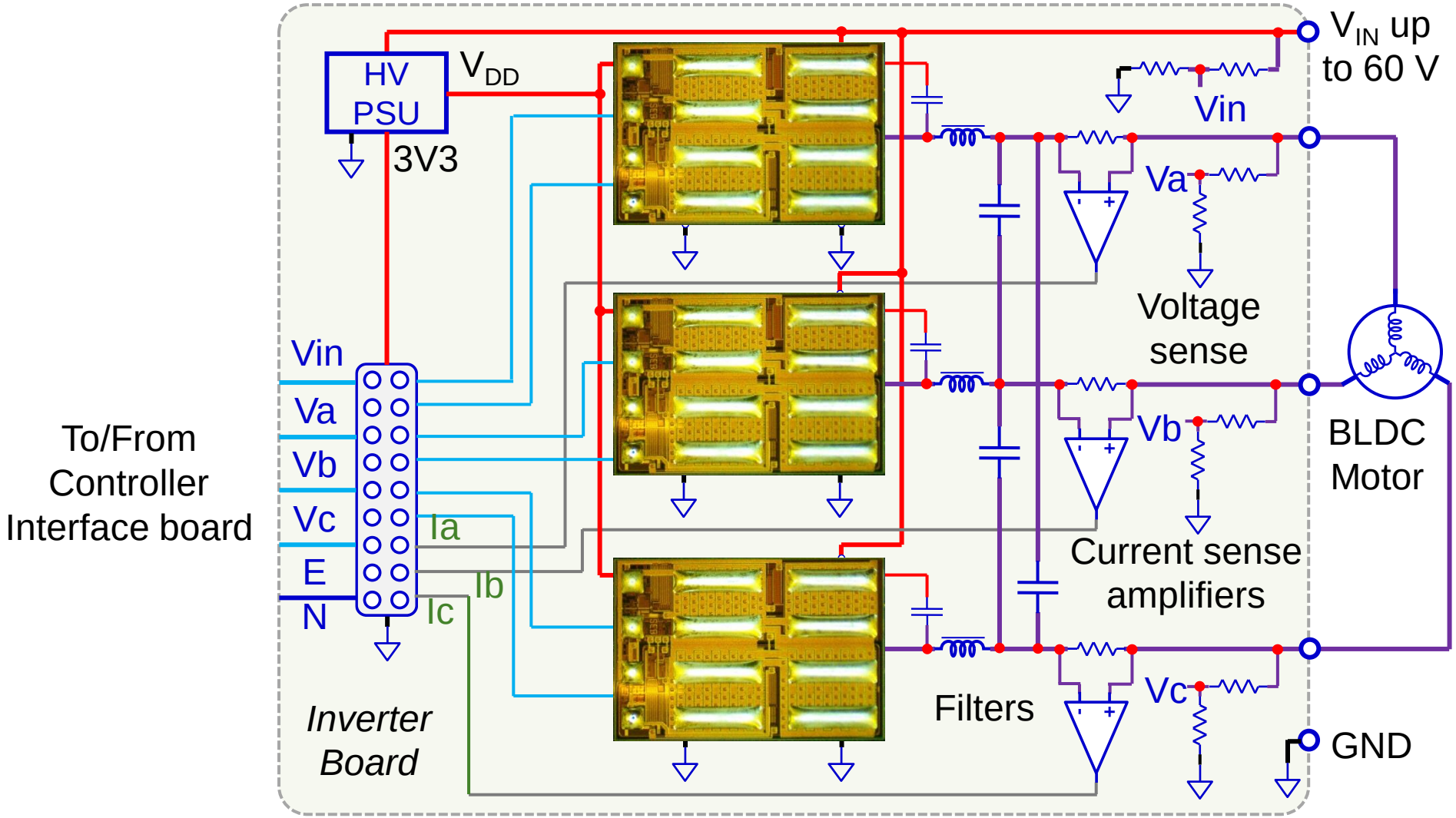

3-Phase Motor Drive

- 15 V – 60 V_{DC} supply
- 15 A_{peak} per phase
- Power a 400 W NEMA 34 Motor
- Measures 55 mm x 45 mm

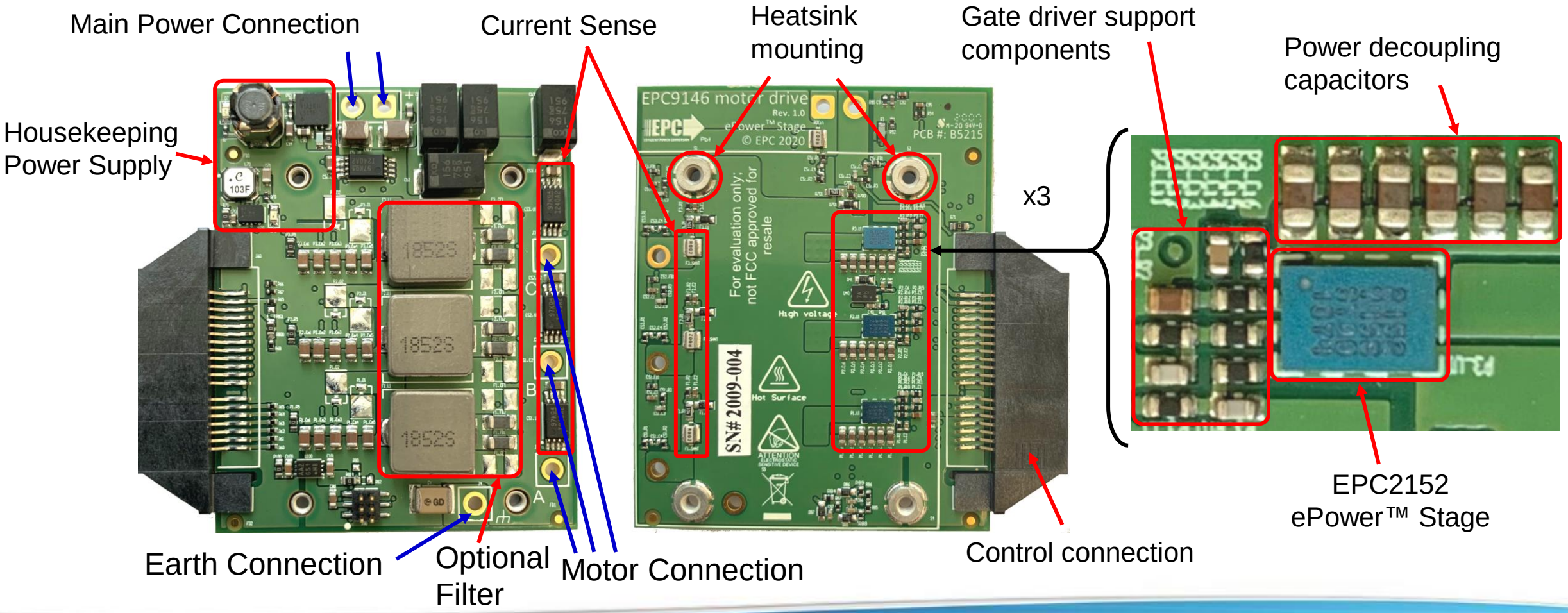

Motor Control Overview

- Interface board
  - dsPic33EP PIM based
  - Human controls: speed, start/stop, direction
- Microchip MotorBench
  - Control tuned to motor

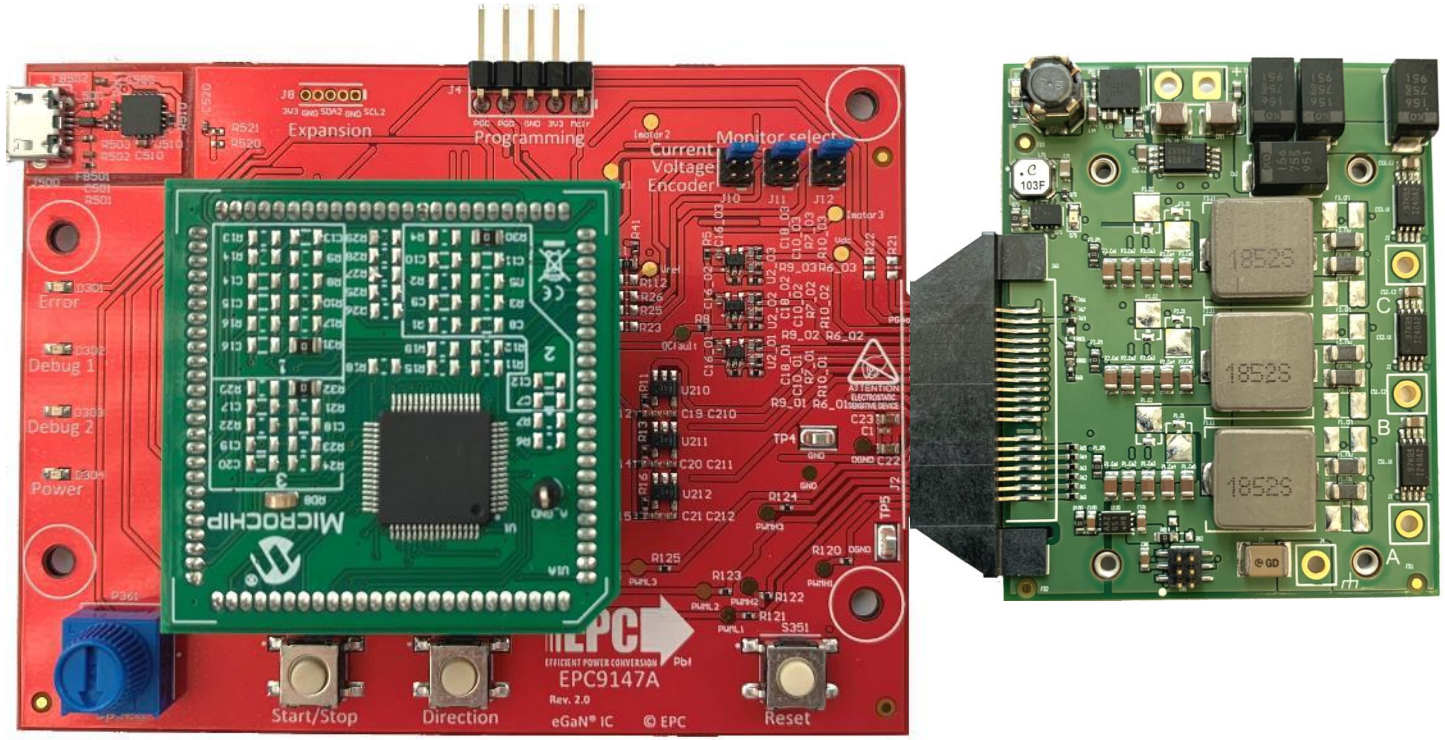

Experimental Testing Overview

- Hysteresis brake dynamometer for loading
- NEMA 34 motor
- Sensorless FOC SVPWM control

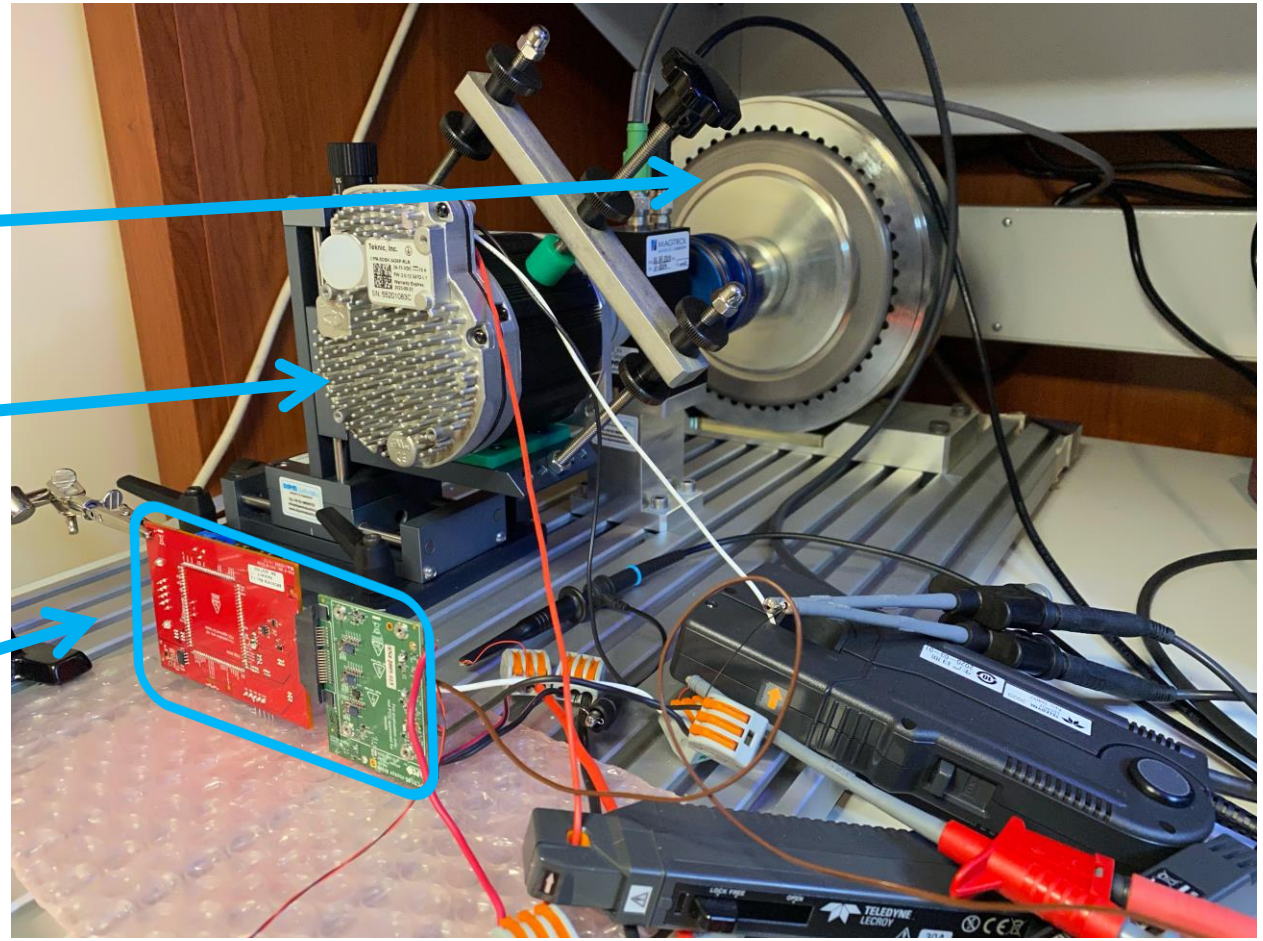

Impact of Dead-Time

36 V_{DC} DC supply, 5 A_{RMS} Motor phase current, 20 kHz

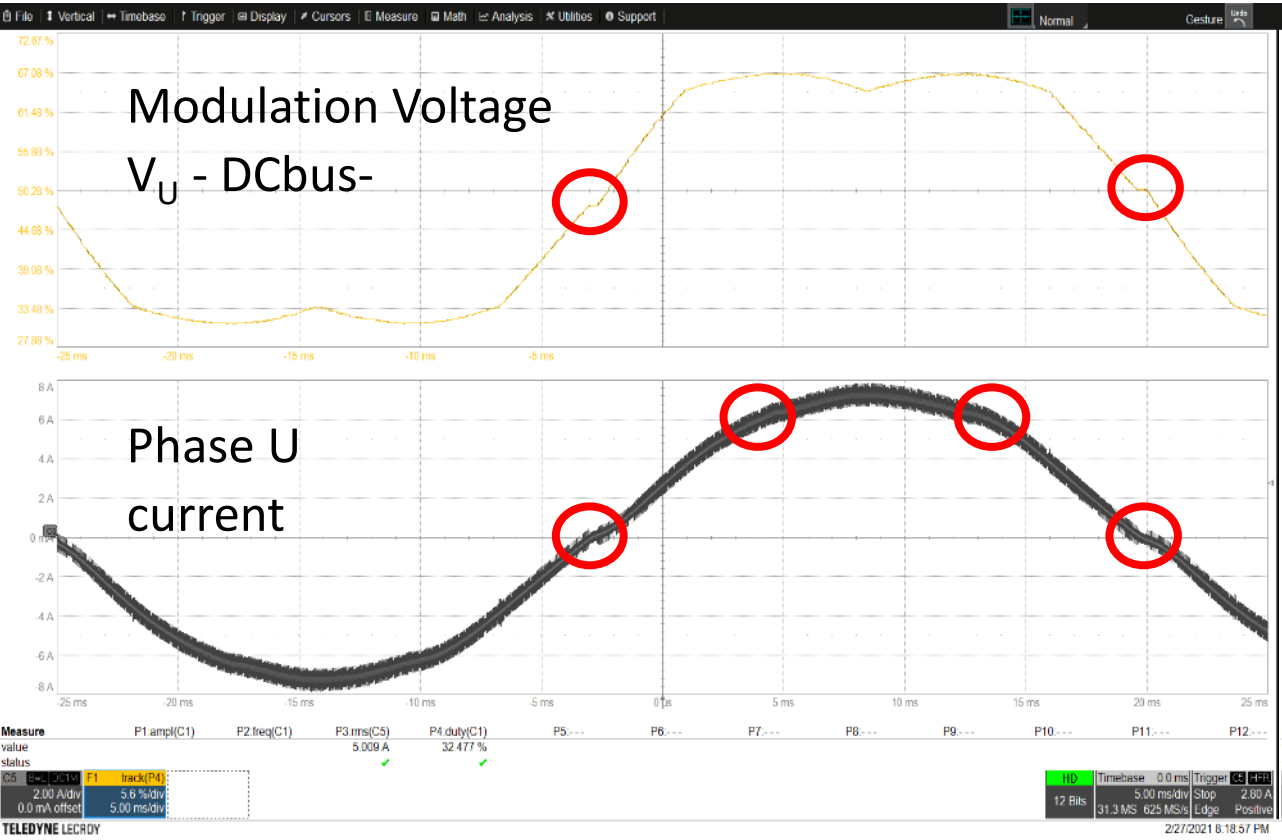

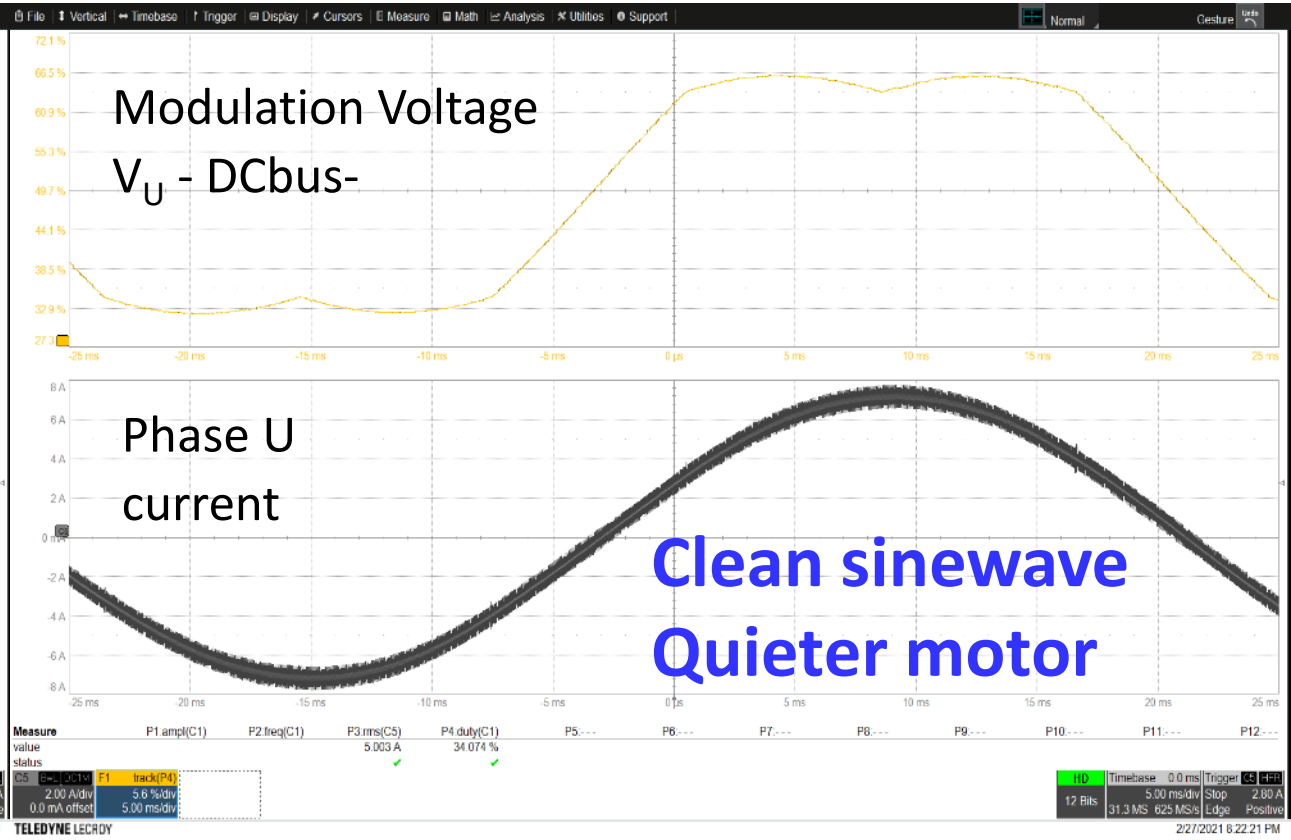

500ns dead time **21ns dead time**

- Video link on dead time effect to acoustic noise: https://youtu.be/nr80sdYyL-M

Impact of Switching Frequency

- Electrolytic Capacitors:
  - Over-sized by RMS current rating
  - Size unaffected by PWM frequency

$$I_{Cap\_RMS} \approx 0.65 \times I_{line\_RMS}$$

- Ceramic Capacitors:
  - Sized by Voltage ripple
  - Size decrease by PWM frequency
  - Optimal ESR at 100 kHz

$$\Delta v_{pp} \propto \frac{1}{4 f_{sw}} \frac{I_0}{C_f}$$

Parameter	Setup 1	Setup 2
	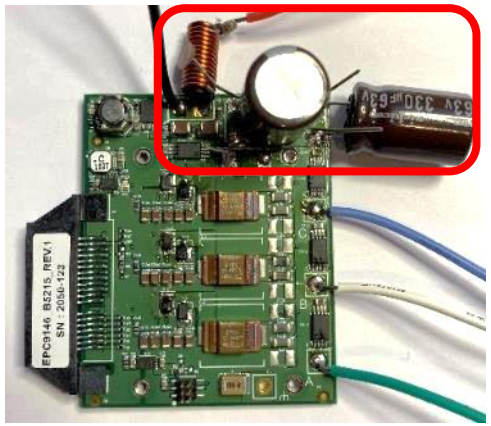	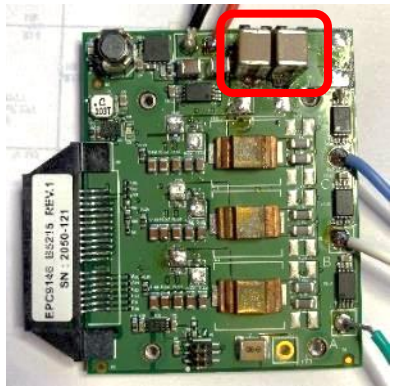
PWM Frequency	20 kHz	100 kHz
Deadtime	500 ns	21 ns
Input Capacitors	2 x 330 µF Electrolytic	2 x 22 µF Ceramic X7R
Input inductor	1 x 2.7 µH	None

Input Voltage and Current Ripple Comparison

36 V_{DC} DC supply, 5 A_{RMS} Motor phase current

Setup 1: 20 kHz 500ns dead time

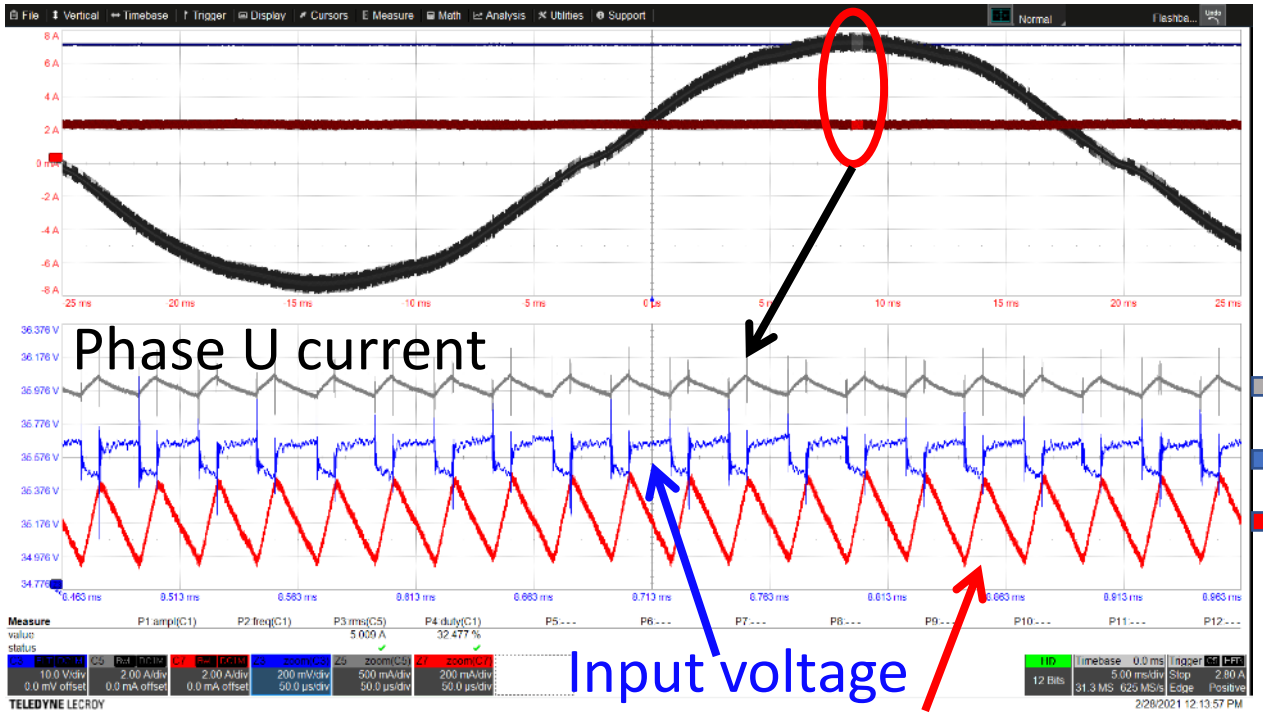

Original LC input filter
2.7µH + 660µF

Setup 2: 100kHz 21ns dead time

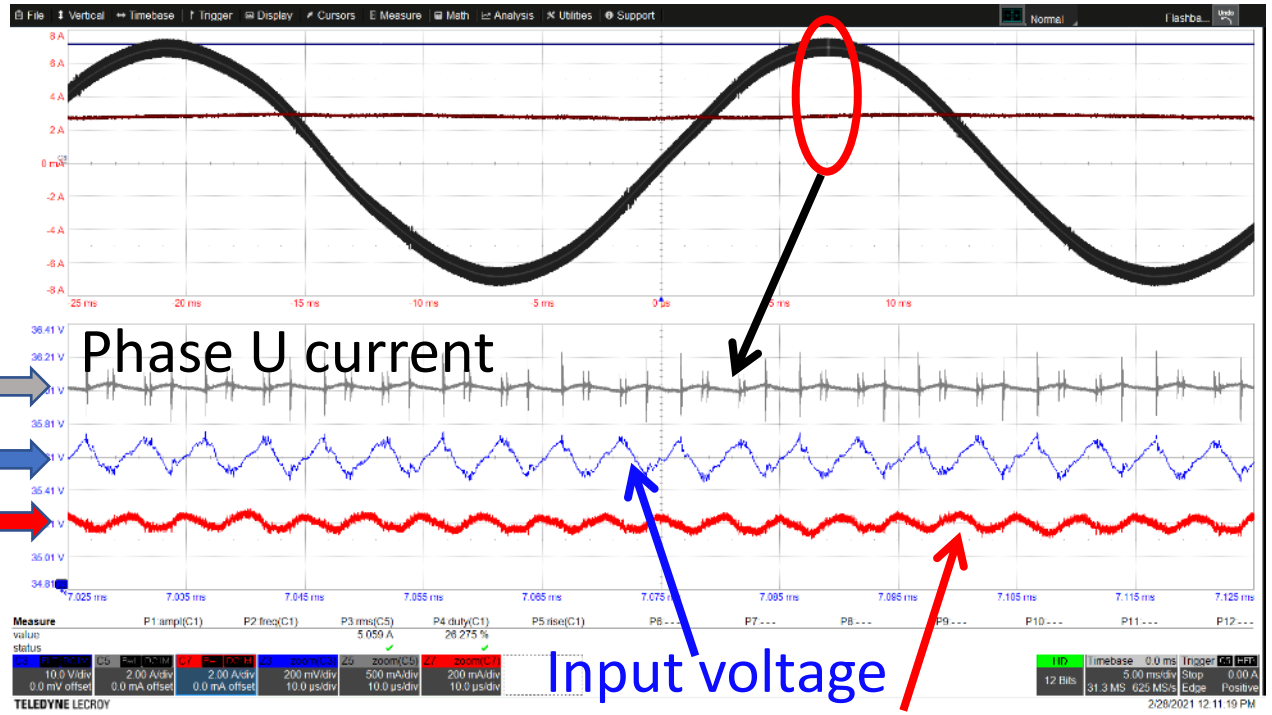

Ceramic capacitors
44µF

Thermal Performance

- 44 V_{DC}, 40 kHz, 21ns deadtime
- Natural convection cooling

6.0 A_{RMS}
No heatsink

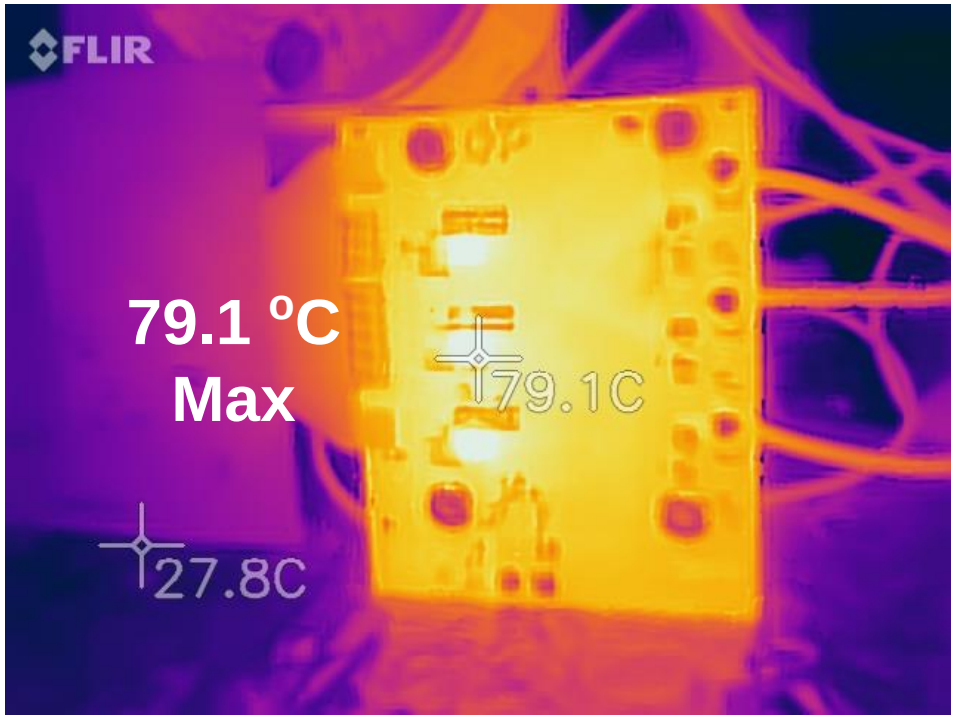

10 A_{RMS}
With heatsink

Conclusions

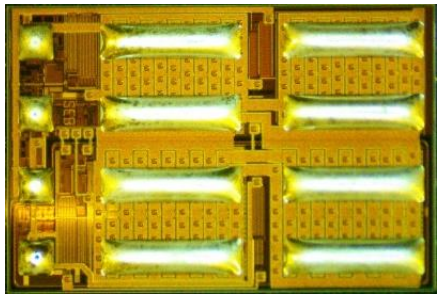

Monolithic GaN ePower™ stage demonstrated in:

300W $^{1}/_{16}$th Brick Converter

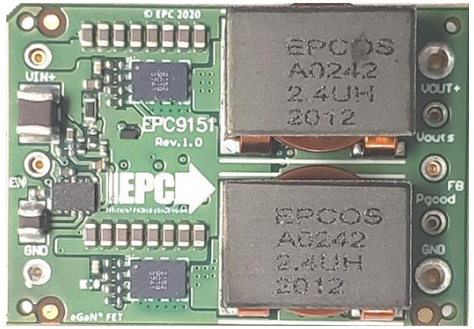

- High power density
- Reduced component count

400 W, 3-phase BLDC motor drive delivers:

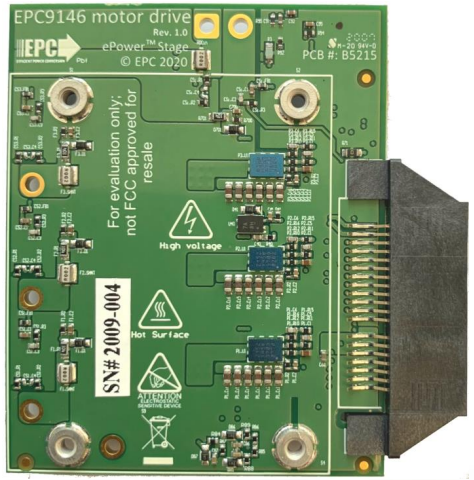

- Quiet operation
- Higher precision
- Compact solution
- Elimination of electrolytic capacitors

Thank you

How To GaN Video Series

3rd Edition Textbook

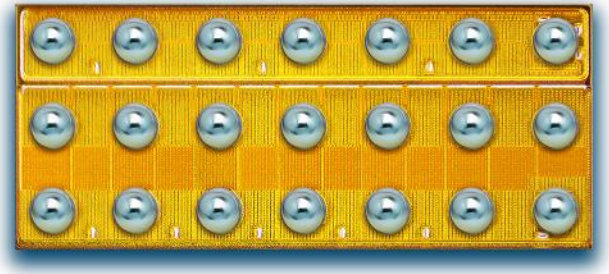

eGaN® FETs and ICs

Evaluation Kits

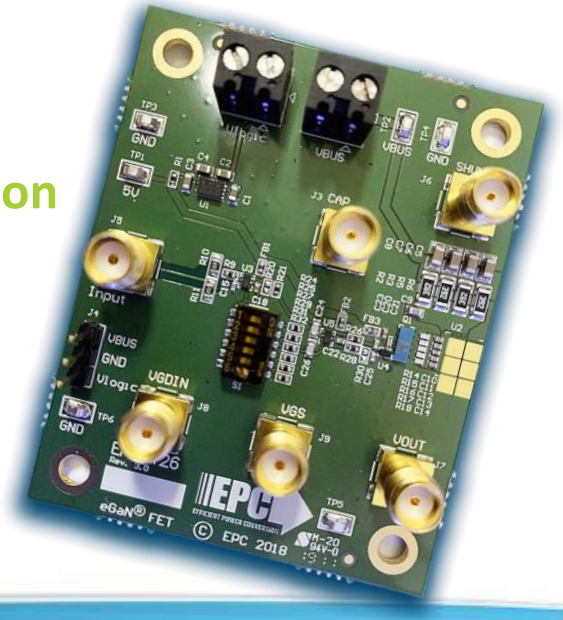

epc-co.com