Importance of measuring parasitic capacitance in isolated gate drive applications

W. Frank
Infineon Technologies

Contents

Contents

Galvanic isolation techniques

Inductive (Magnetic) Coupling

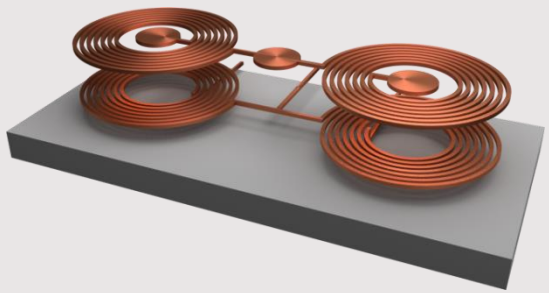

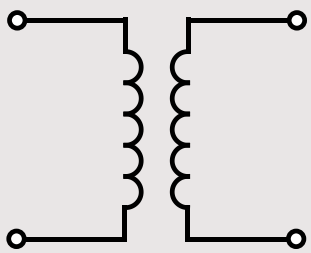

Capacitive Coupling

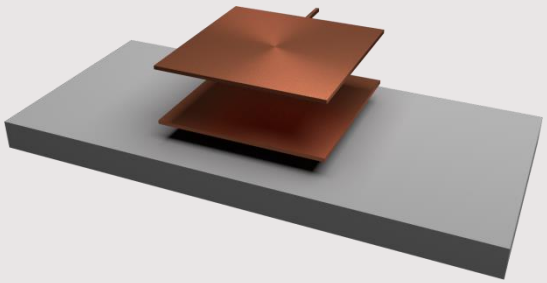

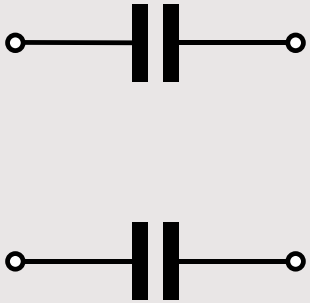

Optical Coupling

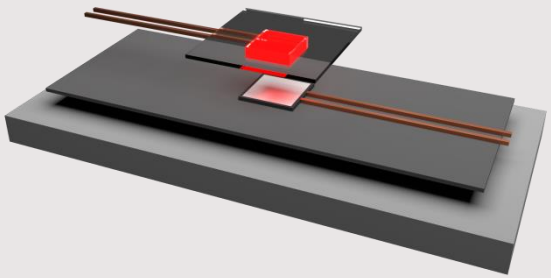

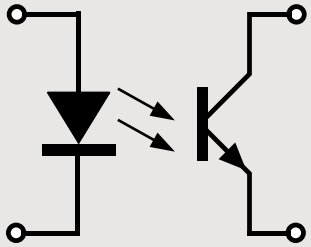

High DC-link voltages lead to longer exposure to d*V*/dt stress

- Isolated gate drivers are used in state-of-the-art in systems with IGBT in half bridge configurations and a DC voltage up to 900 V.
- Modern power transistors (high speed IGBT, SiC) allow very high d*V*/dt.
- The times, in which d*V*/dt can act, are long in systems with high DC voltage.
- Noise which is generated by d*V*/dt overrides isolated signal transfer due to coupling capacitances
- Analyses of capacitive behavior is required for:
  - PCB layout
  - Gate driver ICs
  - Transformers for secondary side supply of gate driver ICs

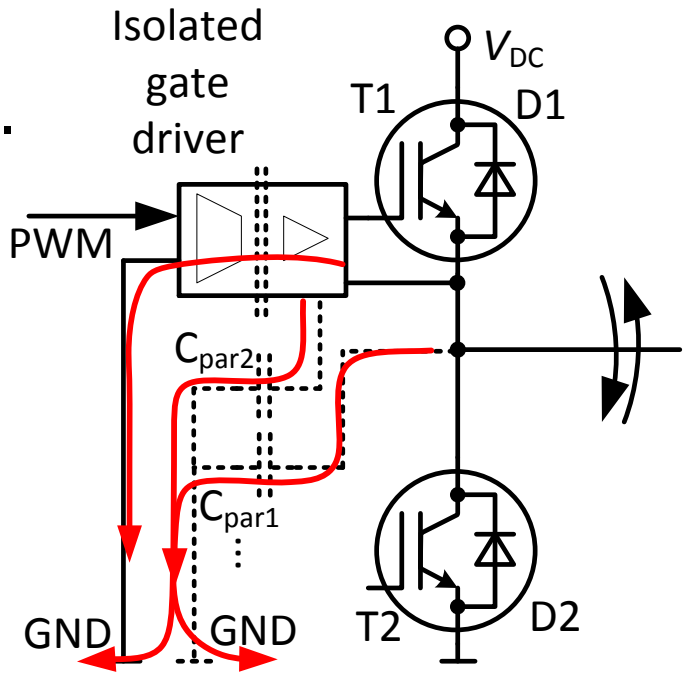

CMTI and C_{IO} specification are performance parameters for gate driver ICs

- Disturbances via the input-to-output capacitance C_{IO} may limit the reliability of power electronics, e.g. by unintended turn-on of a gate driver output and potentially damaging the power stage
- Therefore C_{IO} and common mode transient immunity (CMTI) of gate driver ICs are important parameters for gate drivers to meet systems performance targets.
- Galvanic isolation standards for magnetic couplers such as VDE0884 define C_{IO} and CMTI measurement methods

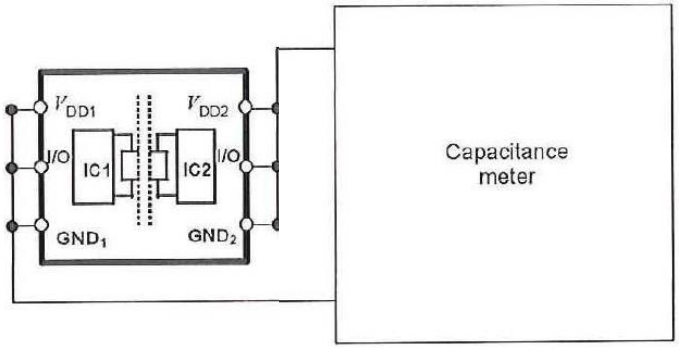

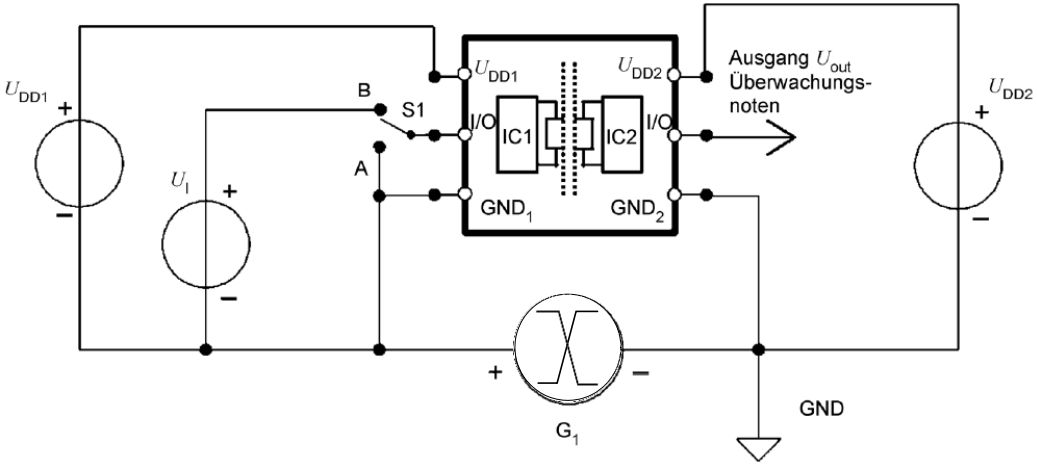

Are gate drivers the real source of d*V*/dt coupling effects?

- The physical realization of electronic components can bring parasitic capacitive coupling effects from the power side to the control side.
- The size of isolation structures for magnetic and capacitive couplers are in the same order of magnitude

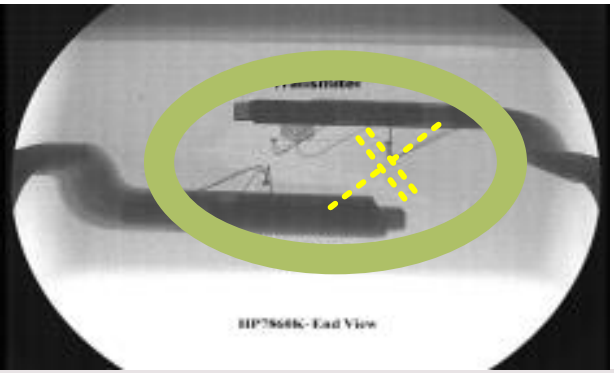

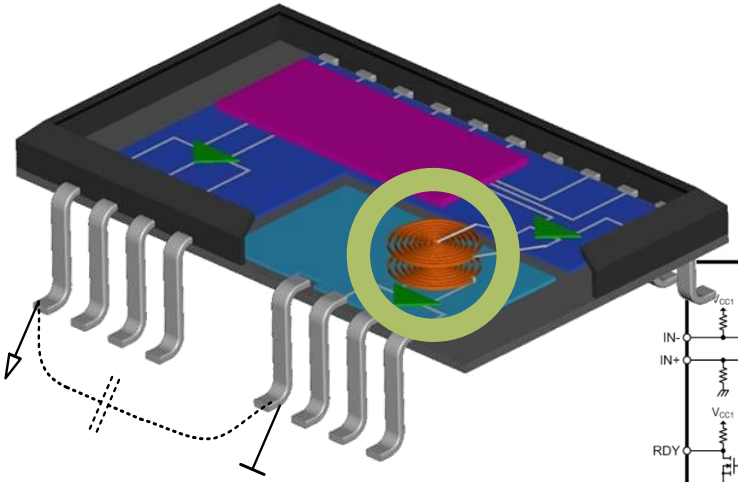

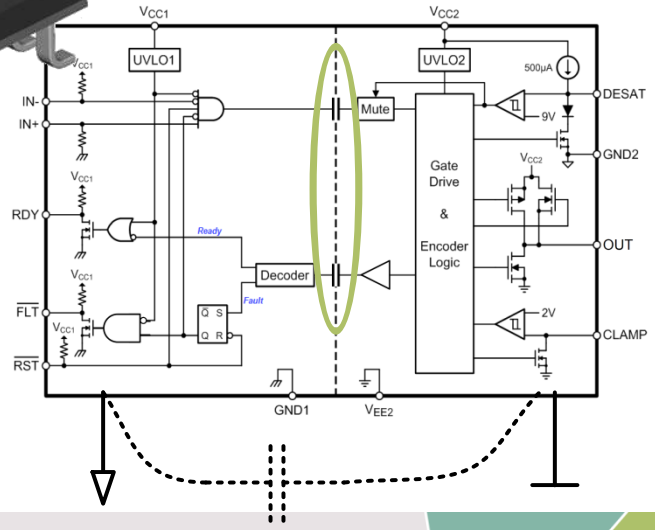

The windings of discrete transformers can have a considerable capacitive coupling

- The physical realization of electronic components can bring parasitic capacitive coupling effects from the power side to the control side.
- A measurement of magnetic couplers and transformers is required.

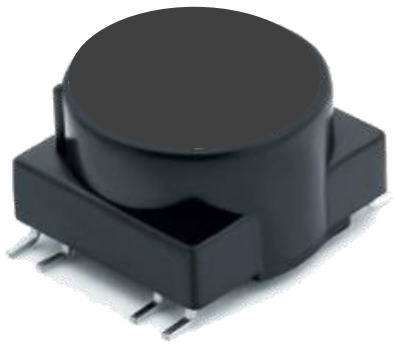

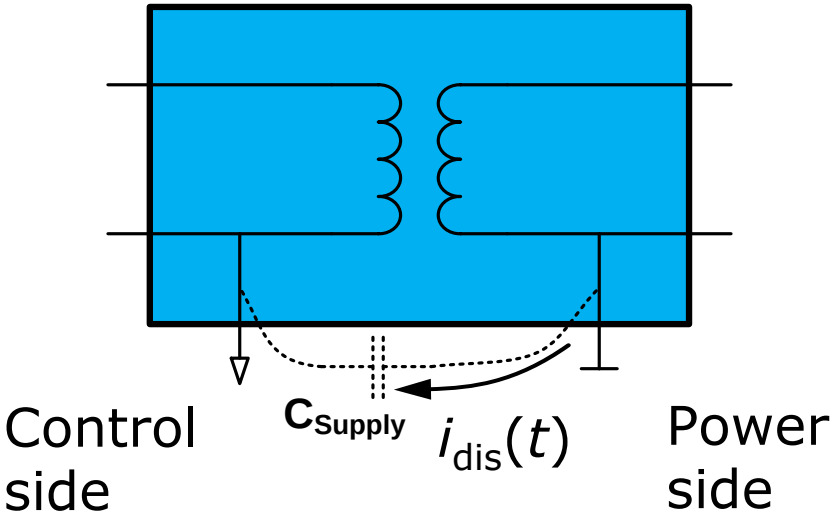

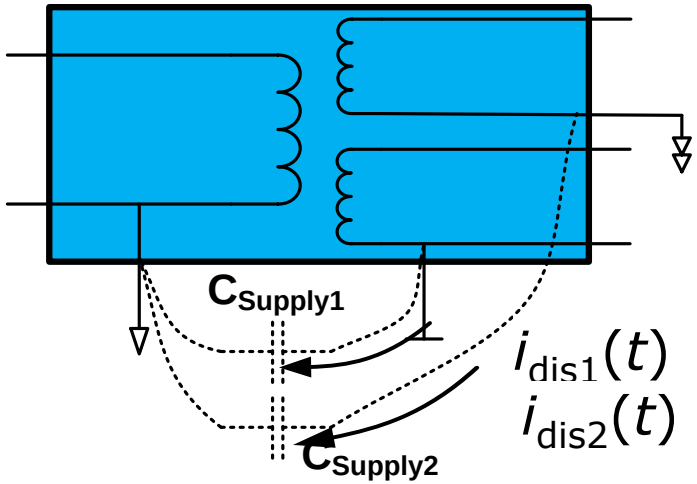

- Note: Transformers of SMPS have usually a larger physical size and coupling capacitance

Contents

Various measurement techniques can be used for measuring small capacitances

Technique	Pro	Cons
Voltage ramp	Simple	Equipment injects errors
Impedance	Precise Equipment <0.1%	Setup influences result -> need compensation !
Resonance frequency of parallel resonator	---	Stable HF oscillation required
RC charging in time-domain	Simple setup	Errors by input capacitance of equipm.
Transition frequency of RC low-pass	---	Limited availability of suitable components
Wien bridge	Relatively simple	Limited availability of suitable components
Capacitive divider	Simple	Input impedance of equipment

The test setup at a glance

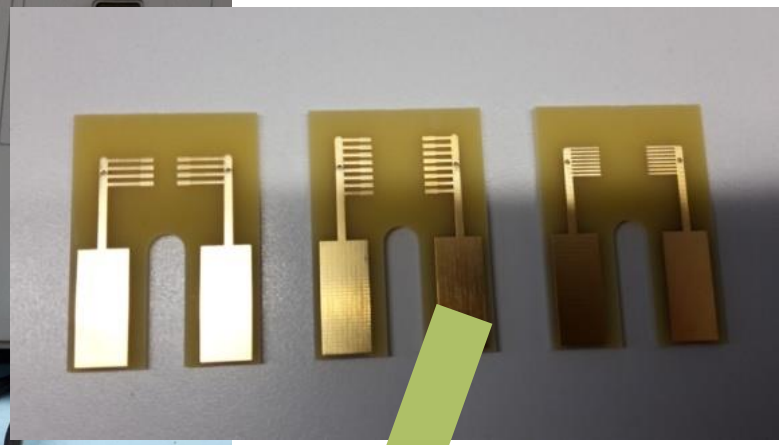

- LCR analyzer: Agilent 4285A
- Test fixture: Agilent 16047A
- Test PCBs for various gate driver ICs in different packages

Compensation of influences originating from the test setup is mandatory

- Compensation test setup including adapter for DUT
  - R_S and L_S -> Z_S by SHORT
  - C_P and G_P -> Y_P by OPEN

- The measurement results can now be corrected by the known influence of Z_S and Y_P

$$Z_S = R_S + j\omega L_S \quad for\ Z_S \gg Z_{SHORT}$$

$$Y_P = G_P + j\omega C_P \quad for\ Z_S \ll \frac{R_S + j\omega L_S}{Y_P}$$

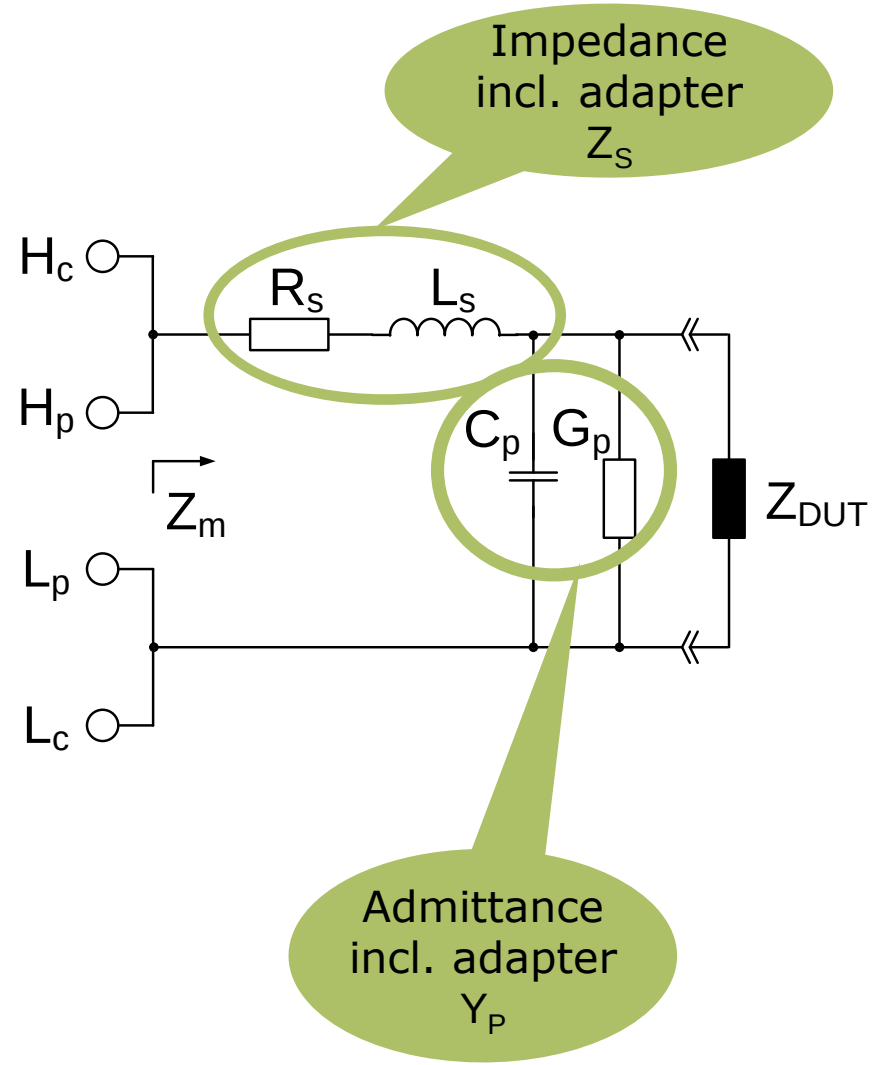

The capacitances of the power supply XFMR are 10x larger than those of gate driver ICs

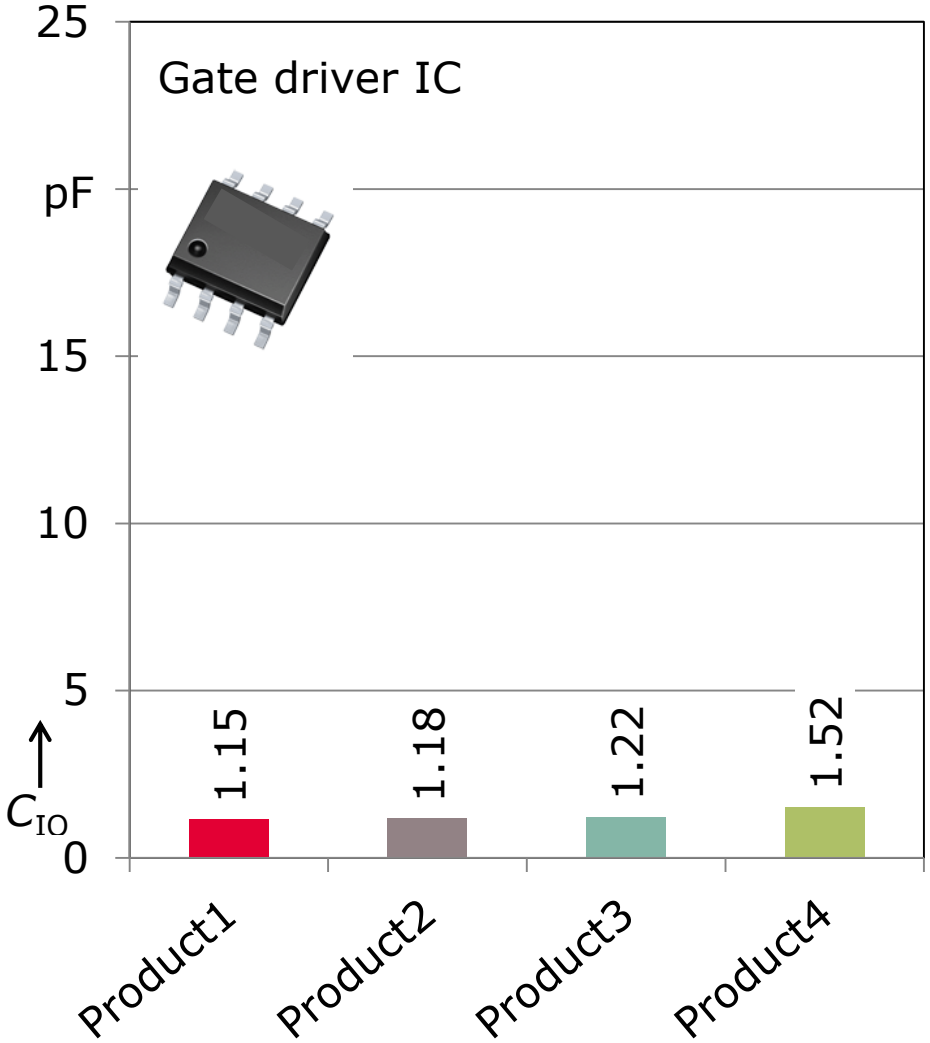

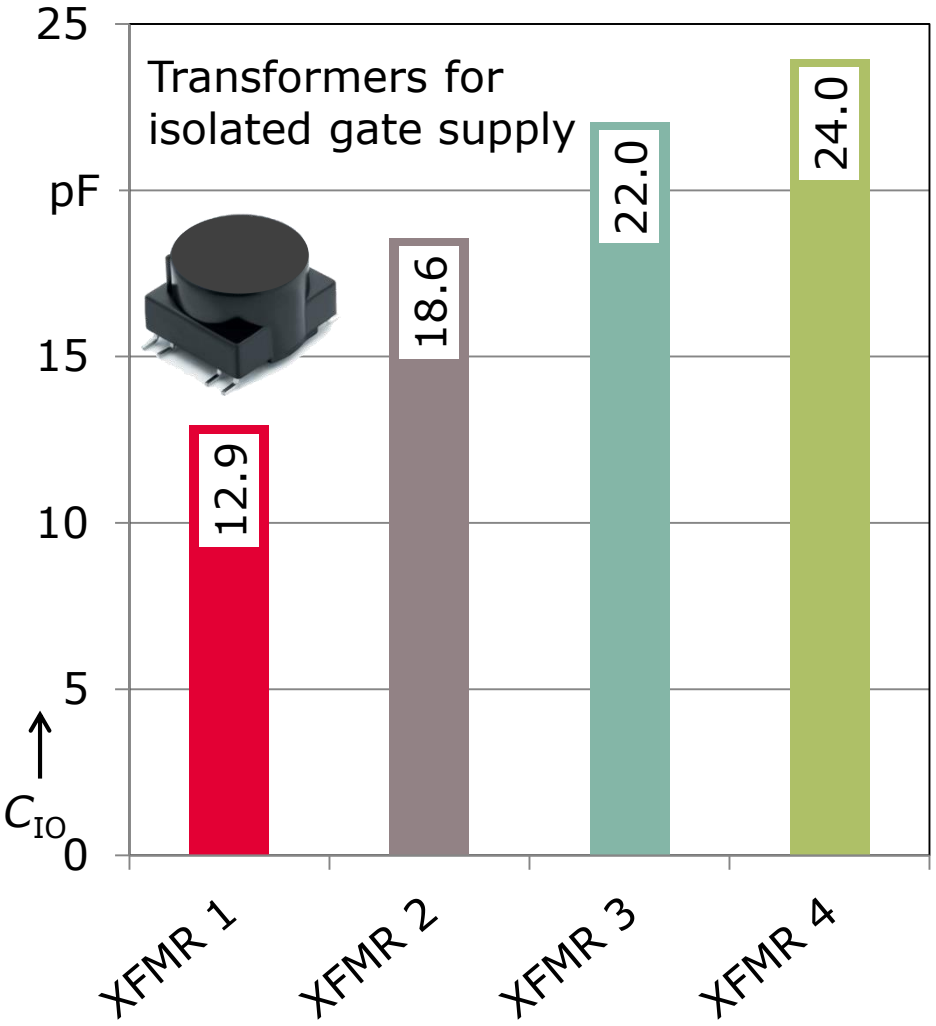

Summary

- All power electronics contain switched nodes. Parasitic capacitances can therefore easily inject currents into signals and references (GND).

- The capacitive coupling of gate driver ICs is around 1 pF. Small coupling capacitances are a key factor for good CMTI – benefits include robust operation and a more accurate sensing.

- Discrete transformers used for the gate driver IC power supply add a large coupling capacitance to power electronic systems. It is also important to choose low coupling capacitance for total system performance.

Part of your life. Part of tomorrow.