Isolation Techniques Without an Isolator

Anthony T. Huynh, Maxim Integrated
Principal Member of Technical Staff, Applications Engineering

APEC 2018

maxim integrated™

Outline

- Isolation Overview
- Isolator Technologies
- Isolation Techniques for Power Path Feedback Loop
- Summary

Outline

Isolation Overview

Isolator Technologies

Isolation Techniques for Power Path Feedback Loop

Summary

- Why do we need isolation?
- Isolation for signal path, power path
- Safety regulatory and compliance standards

Why Do We Need Isolation?

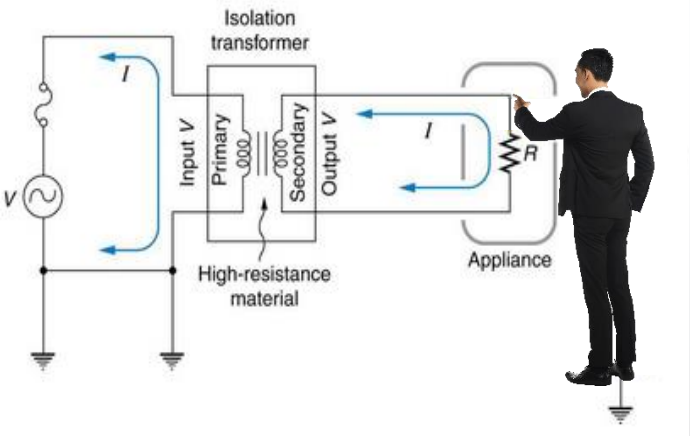

Safety

- Prevents current surges from damaging equipment
- Protects humans from mains voltage

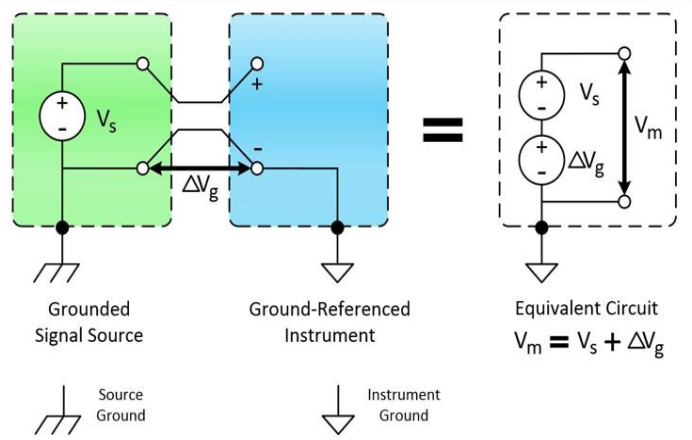

Avoid Ground Loops

- Avoids disruptive ground loops where different ground potentials are involved
- Isolates digital noise from precision analog system

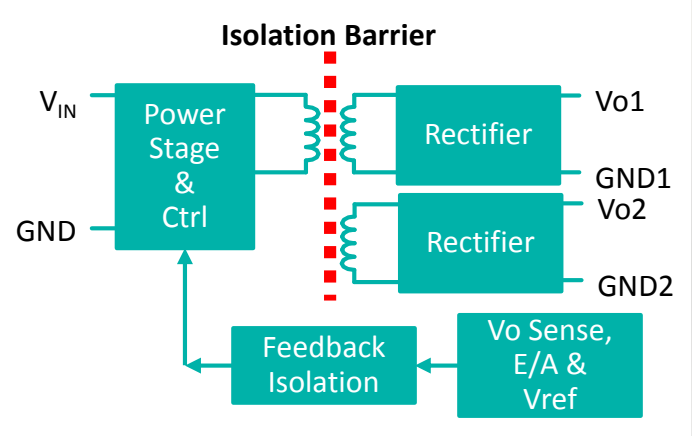

Level Shifting

- Generates multiple isolated positive and/or negative outputs

maxim integrated™

Isolation for Signal Path & Power Path

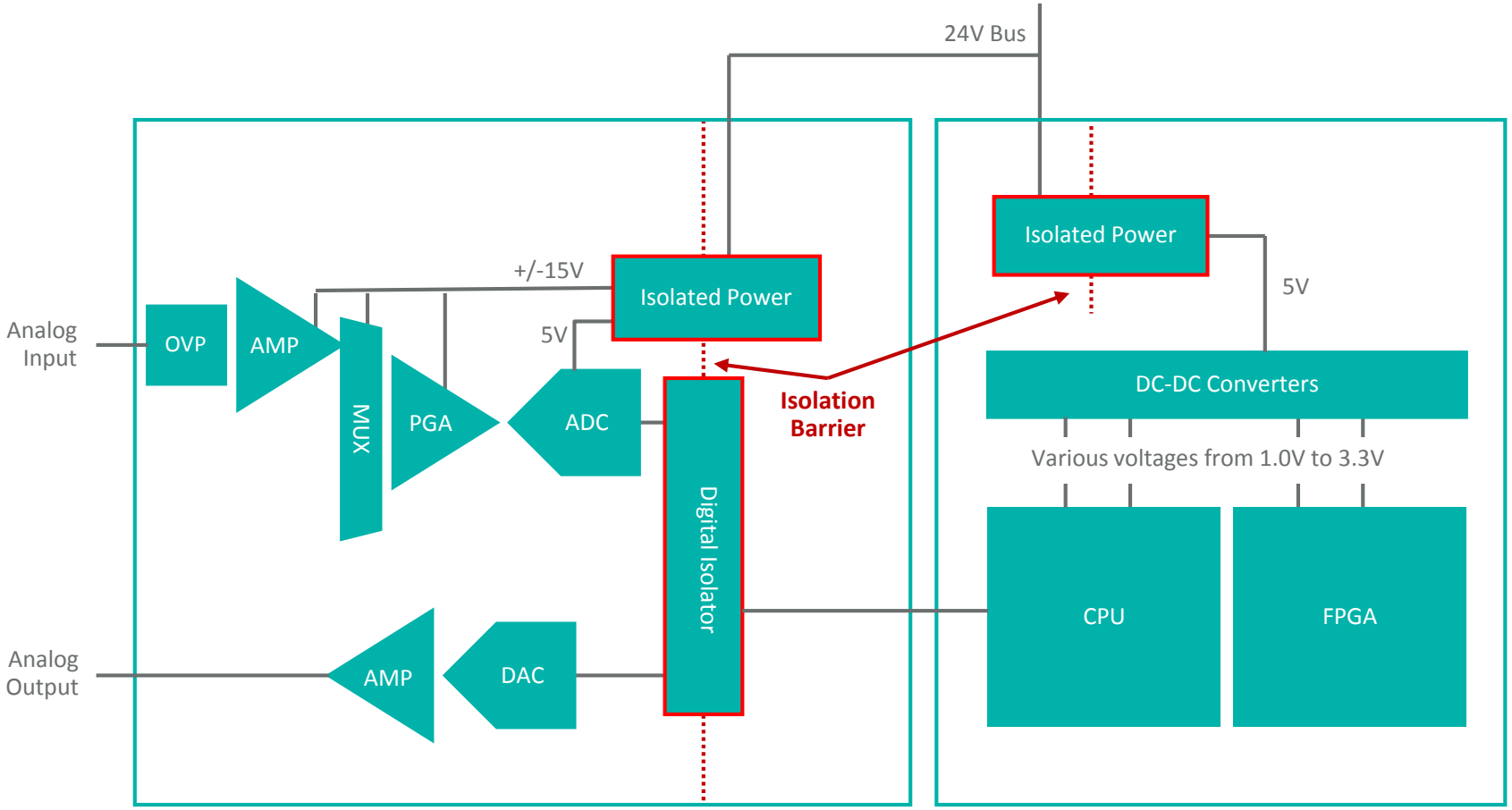

Safety Regulatory and Compliance Standards

- UL1577: Optical Isolators
- VDE V 0884-10: Magnetic and capacitive couplers for safe isolation
- VDE V 0884-11: Magnetic and capacitive coupler for basic and reinforced isolation

- IEC 61000-4: Electromagnetic Compatibility (EMC) Test Standards
- IEC 60950-1: Information Technology Equipment – Safety
- IEC 60601-1: Medical Electrical Equipment
- IEC 61010-1: Safety Requirements for Electrical Equipment for Measurement, Control and Laboratory Use

Outline

Isolation Overview

Isolator Technologies

Isolation Techniques for Power Path Feedback Loop

Summary

- Analog: Optical
- Digital: Optical, magnetic, and capacitive
- Isolation for signal path example

Analog Optical Isolator

Analog current is reflected to the isolated side, measured as current transfer ratio, CTR

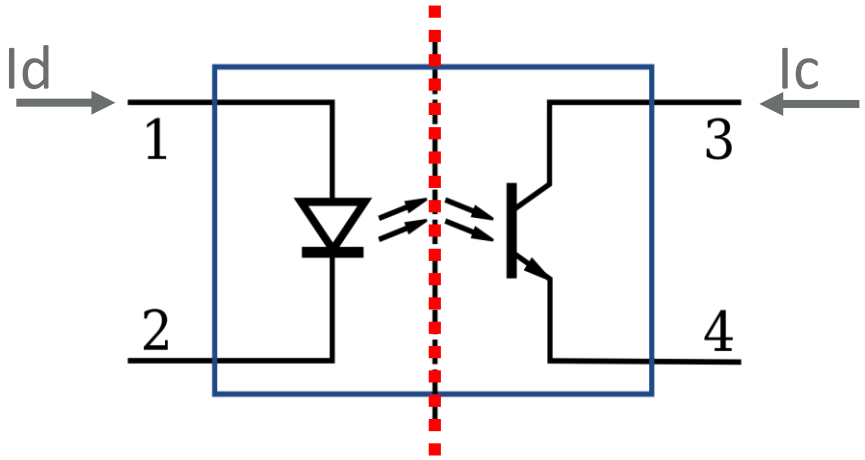

$$CTR = Ic/Id$$

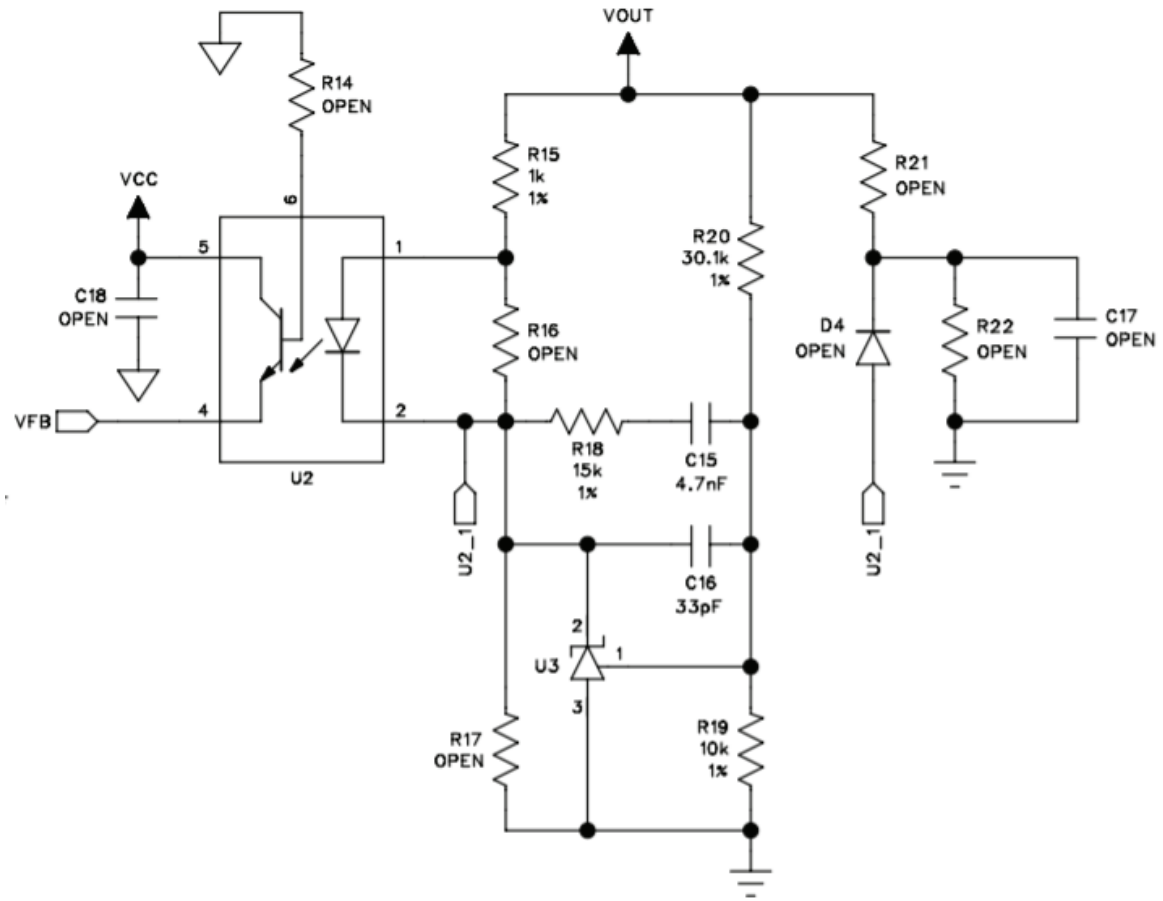

Digital Isolators: Optical and Magnetic

Optical

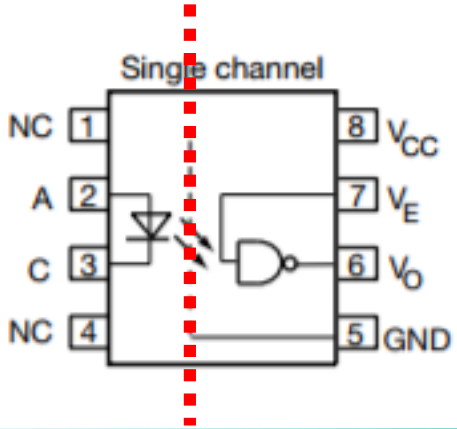

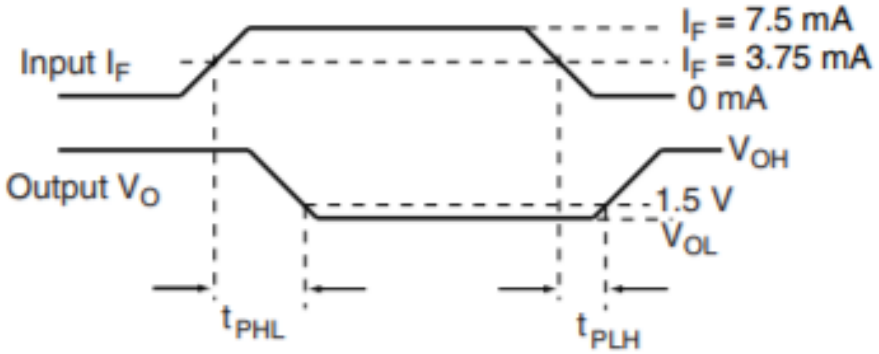

Magnetic

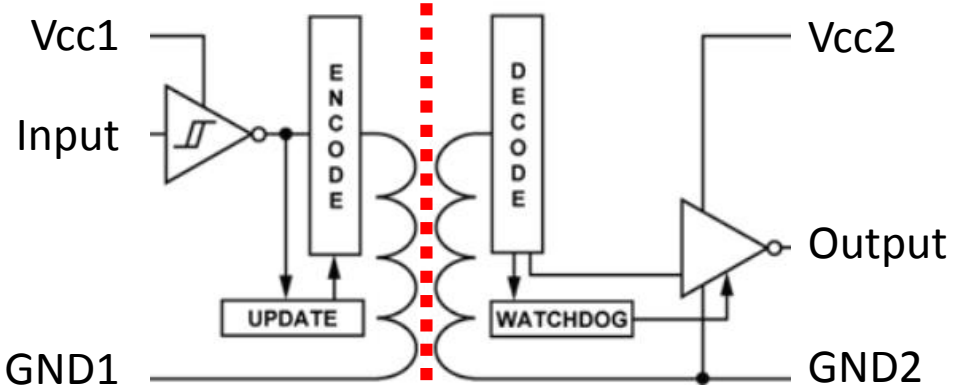

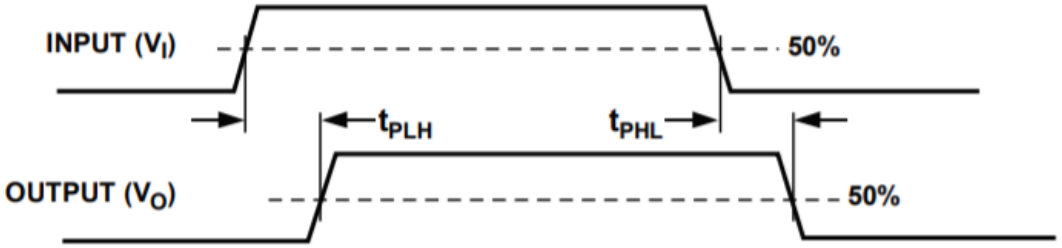

Digital Isolator: Capacitive

Modulator-based

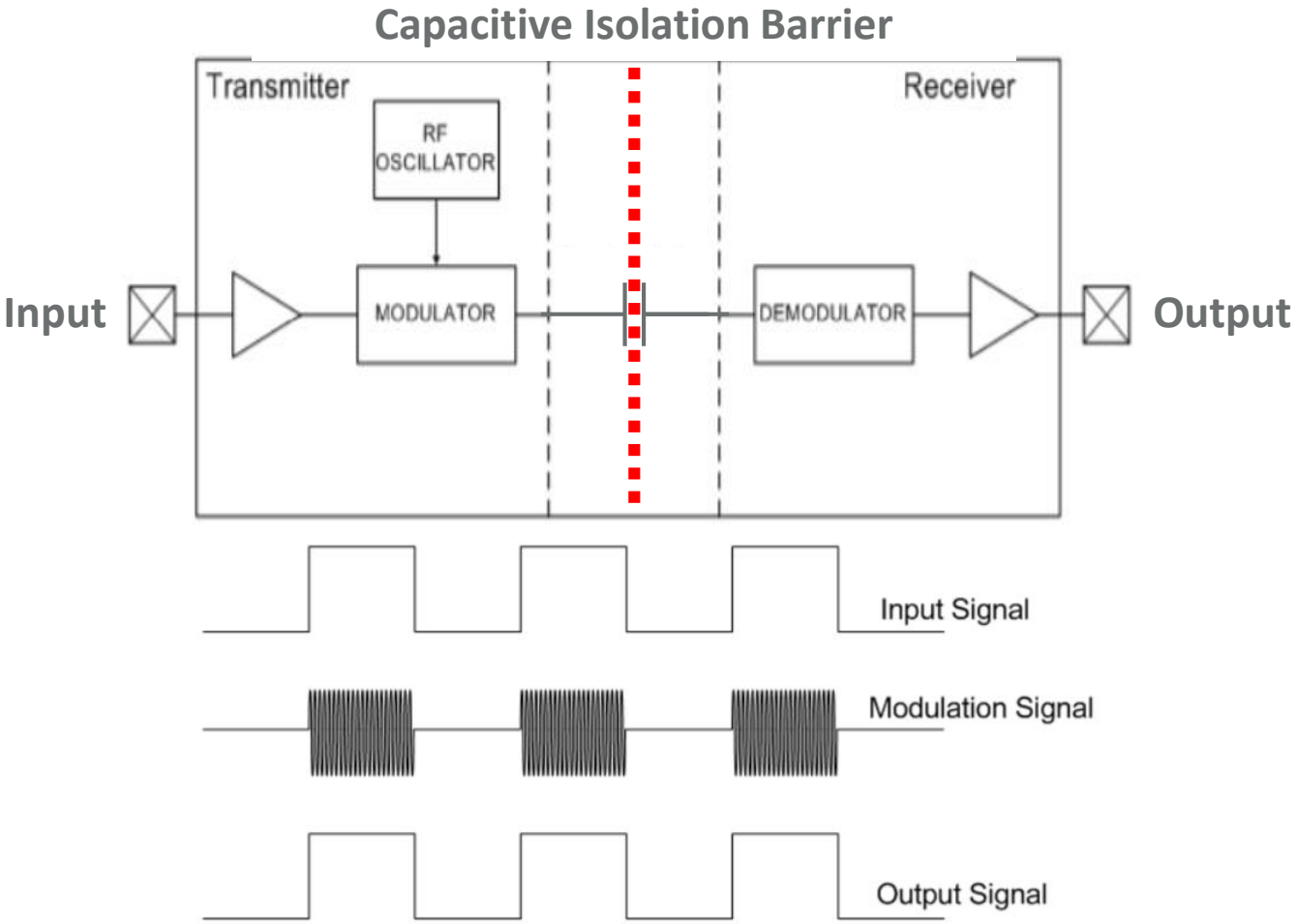

Digital Isolator: Capacitive

Edge-based

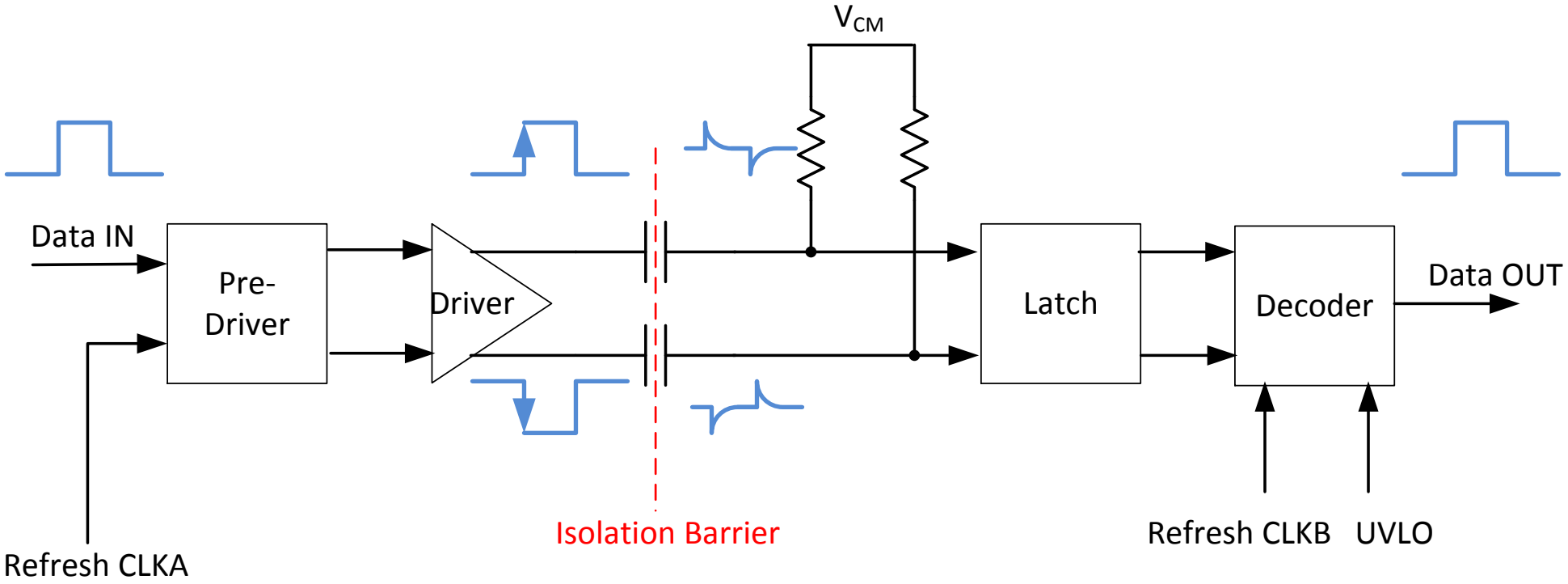

- Edge based differential
- Best for low prop delay, low jitter, and low power

Digital Isolator: Edge-Based Capacitive vs. Optocoupler

	# Chs	Data Rate	Prop' Delay (max)	Prop' Delay Skew (max)	Supply-Current/Channel	CMTI	Iso Voltage V_{ISO}
MAX14435FAWE	4	150Mbps	10ns	2ns	0.6mA	50kV/µs	$5KV_{RMS}$
Leading Optocoupler	1	50Mbps	22ns	16ns	15mA	10kV/µs	$5KV_{RMS}$

Optocoupler Prop Delay Definition

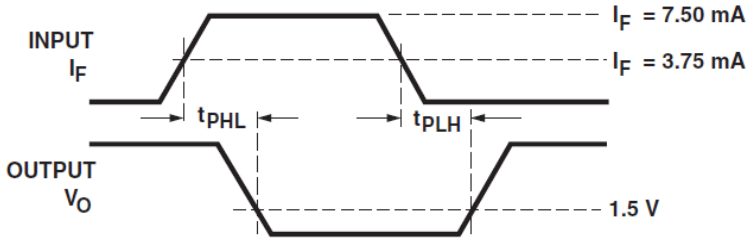

Other Digital ISO Propagation Delay Definition

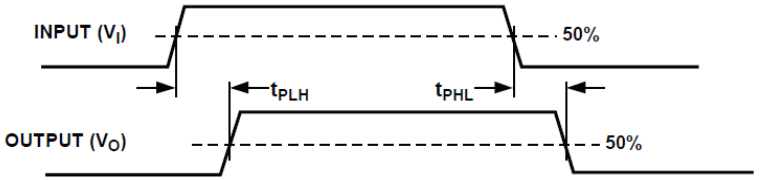

Digital Isolation Technology Comparison Summary

Isolator Type	Advantages	Disadvantages
Inductive	Inherently good CMTI performance Low power at low data rates	Susceptible to magnetic field interference High Power at high data rates
Optical	Thicker insulation for fail safe applications (e.g. motor drives) High working voltage	Slower data transmission rates Relatively high power dissipation Large performance variation over temperature LED degradation over time Low CMTI
Capacitive	Fastest data transmission rates (200Mbps) Good immunity to magnetic fields Low power at low and high data rates (Maxim's edge based)	Susceptible to electric field interference Good CMTI performance requires extra circuitry

Outline

Isolation Overview

Isolator Technologies

Isolation Techniques for Power Path Feedback Loop

Summary

- Analog isolation example
- Digital isolation example
- Isolation without an isolator examples
  - > No-Opto Flyback
  - > Iso-Buck

Generic Isolated Power Supply

Analog feedback loop

Conventional Isolated DC-DC converters need:

- Isolation transformer
- Secondary side Error Amp
- Opto-coupler
- Discrete components to couple the feedback signal across the isolation boundary

Digital feedback loop replaces:

- Opto-coupler w/ digital isolator
- Error Amp w/ ADC, DAC & Digital Control Core

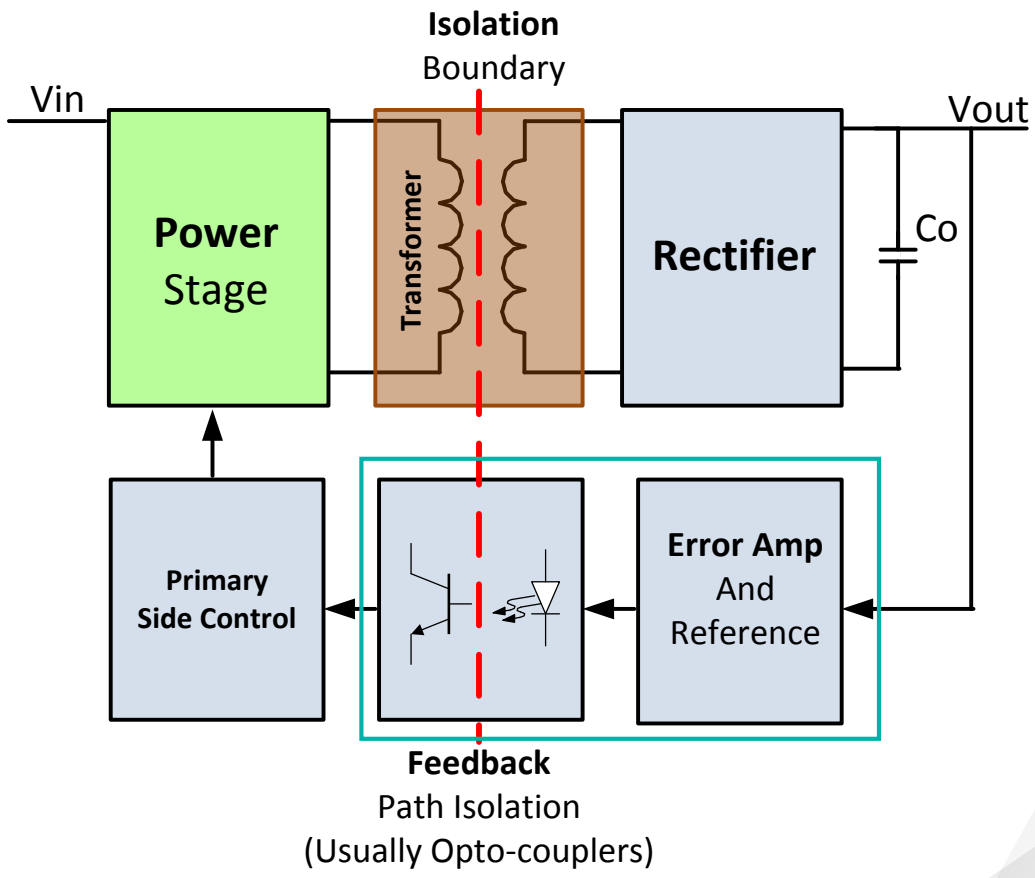

Feedback Loop Isolation Without Isolator – No-Opto Flyback

Primary side sensing eliminates opto-coupler and related feedback circuitry

Classic Flyback with Opto-Coupler Feedback

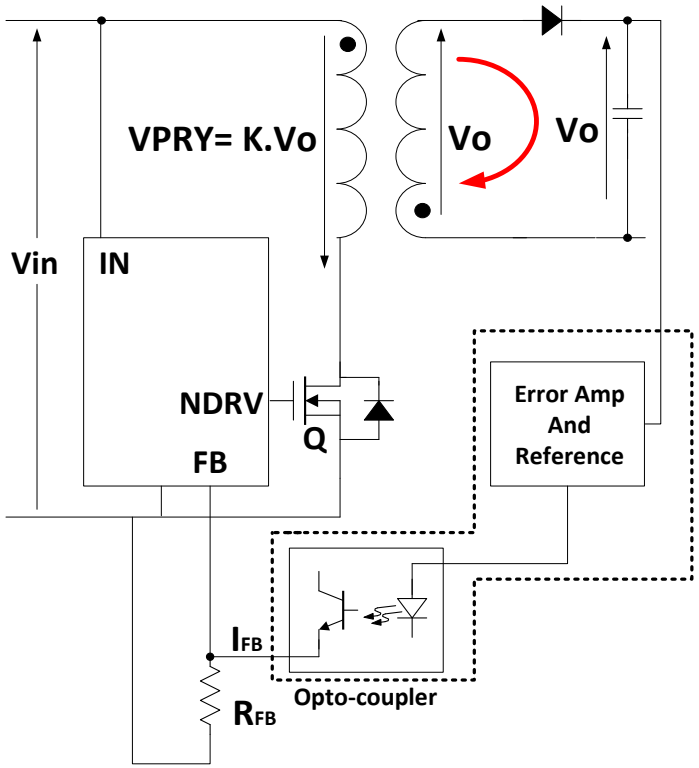

$$K = \frac{N_p}{N_s}$$

No-Opto Flyback

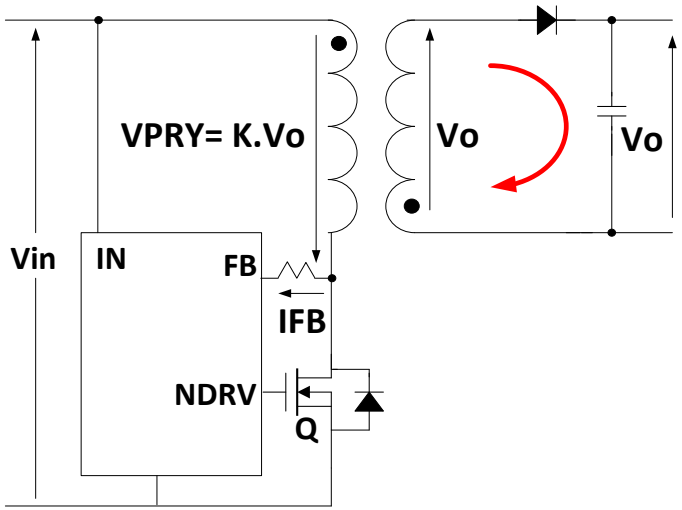

Eliminating Opto-Coupler Saves 30% Area

Opto-Coupler and Error Amp circuitry eliminated

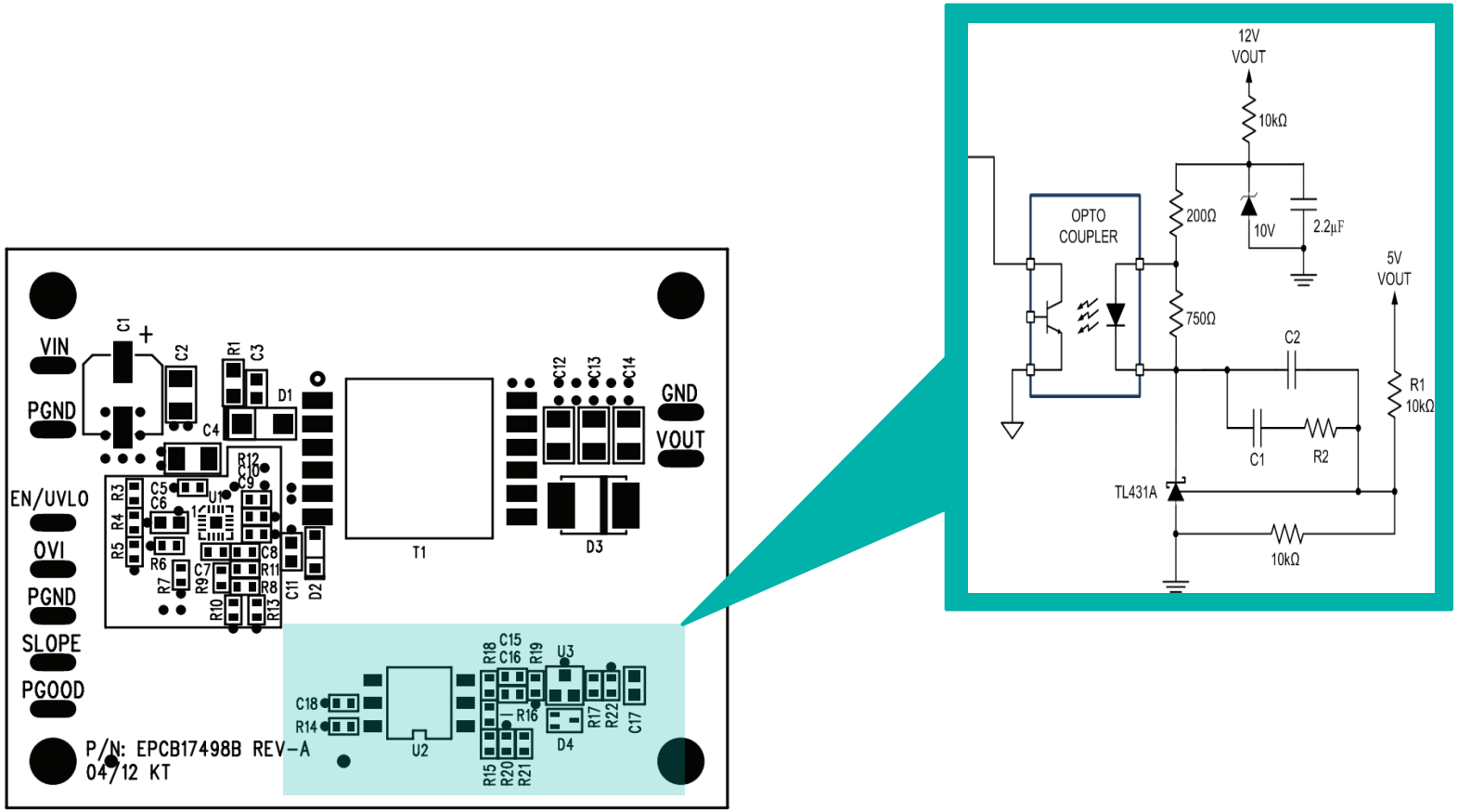

No-Opto Flyback Operating Waveforms

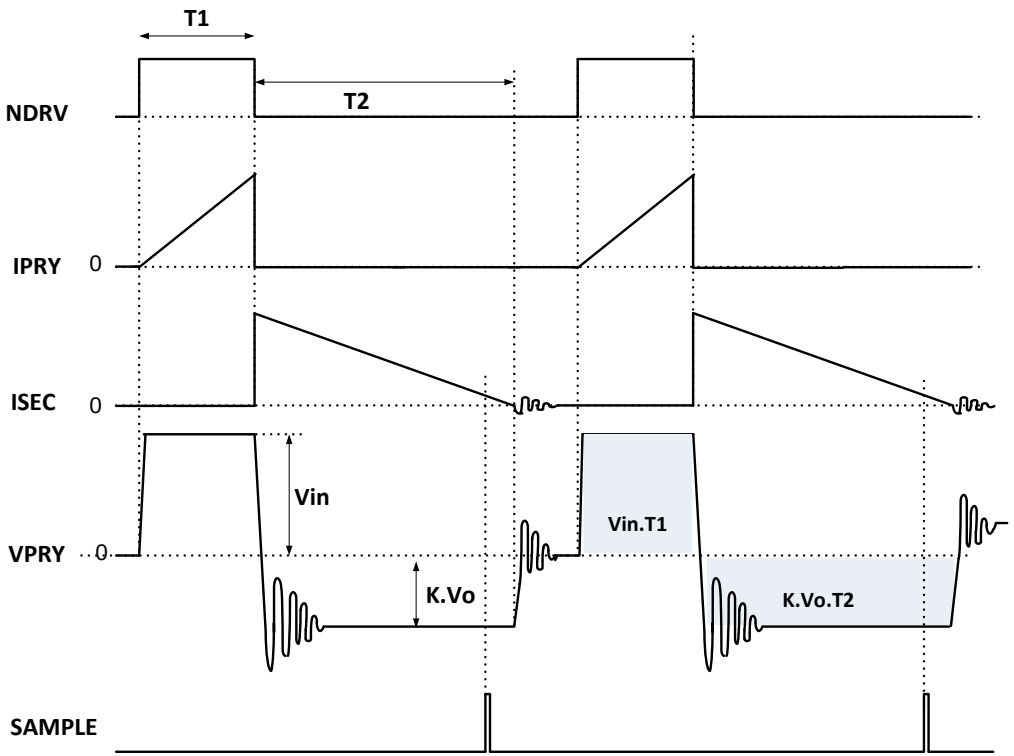

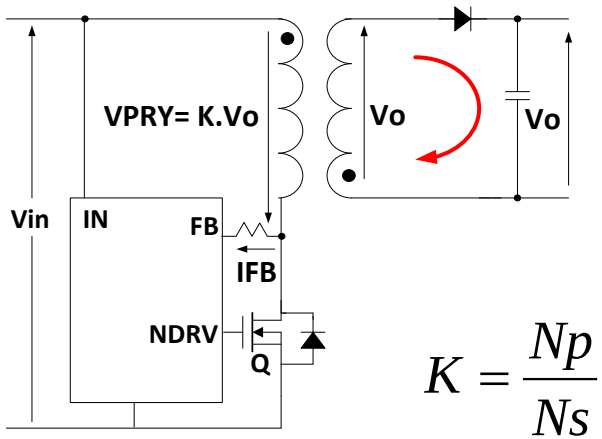

$$K = \frac{Np}{Ns}$$

$$V_{in} \times T1 = K.V_o \times T2$$

60V, No-Opto Isolated Flyback Controller

Benefits

- Simple magnetics – no feedback winding
- Enhanced reliability due to Opto elimination
- Low component count – 50% lower
- Smaller Solution size – 30% smaller

Features

- 4.5V to 60V operating supply
- No OPTO-coupler or 3rd winding needed
- +/- 5% V_{OUT} load and line regulation (typ)
- 2A/4A peak source/sink gate drive
- 50kHz to 250kHz Programmable Fsw
- -40°C to 125°C operation

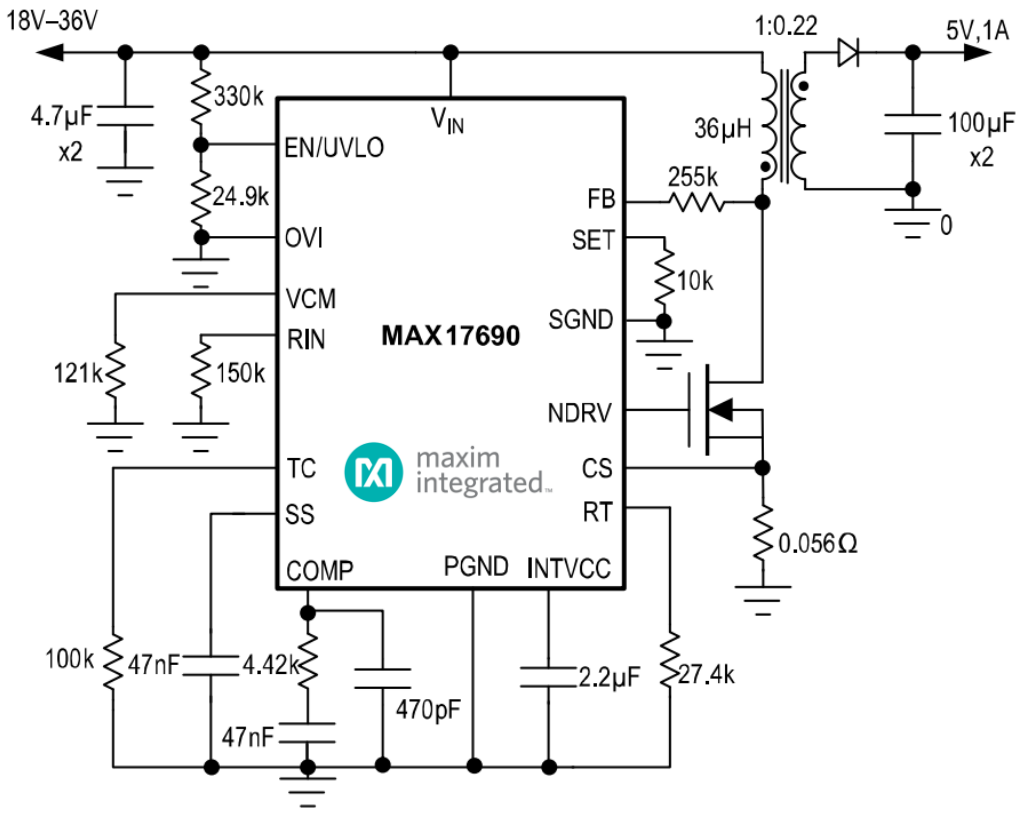

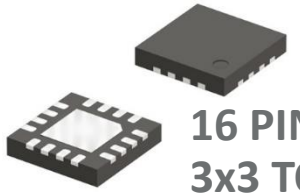

16 PIN
3x3 TQFN

Feedback Loop Isolation Without Isolator – Iso-Buck

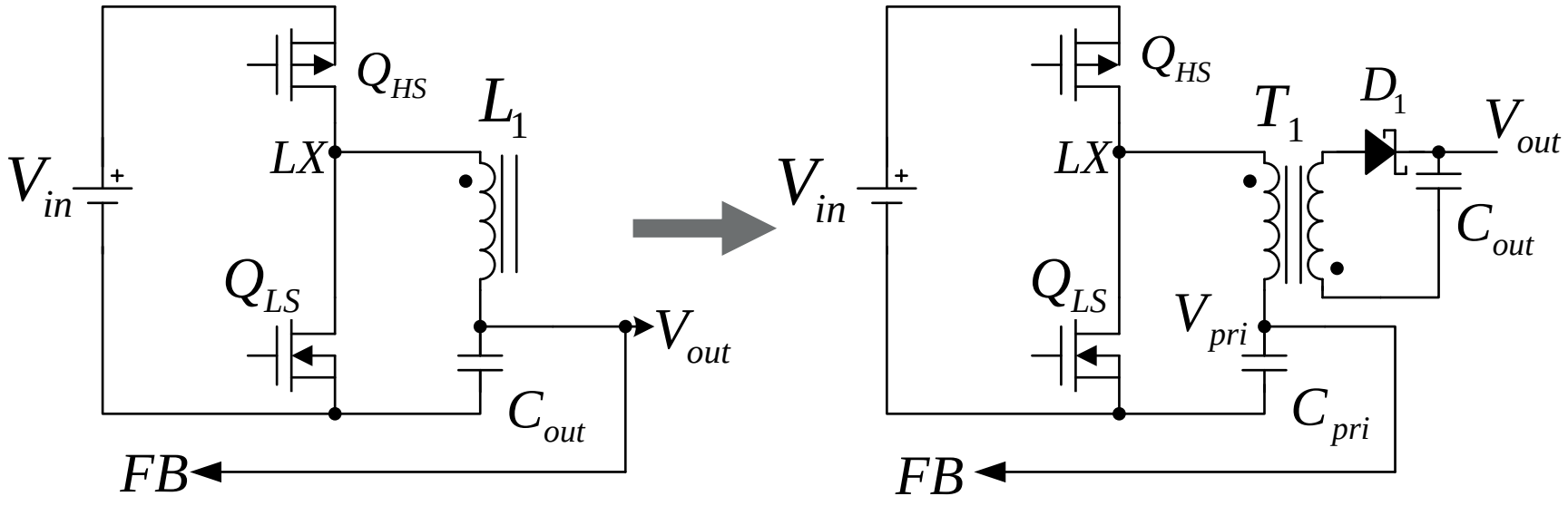

Standard synchronous buck

Iso-buck

High-Efficiency, Isolated “Iso-Buck” DC-DC Converter

4.5V to 42V input

Benefits

- Low component count (Int. Sync FETs)
- Simple transformer – no bias winding
- Small solution size
- Robust protection scheme

Features

- Wide 4.5V to 42V input voltage
- 0.9V to 92%V_{IN} output voltage
- Up to 5W output power
- Built-in primary O/P voltage monitoring
- 10Ld 2x3 TDFN

Typical operating circuit

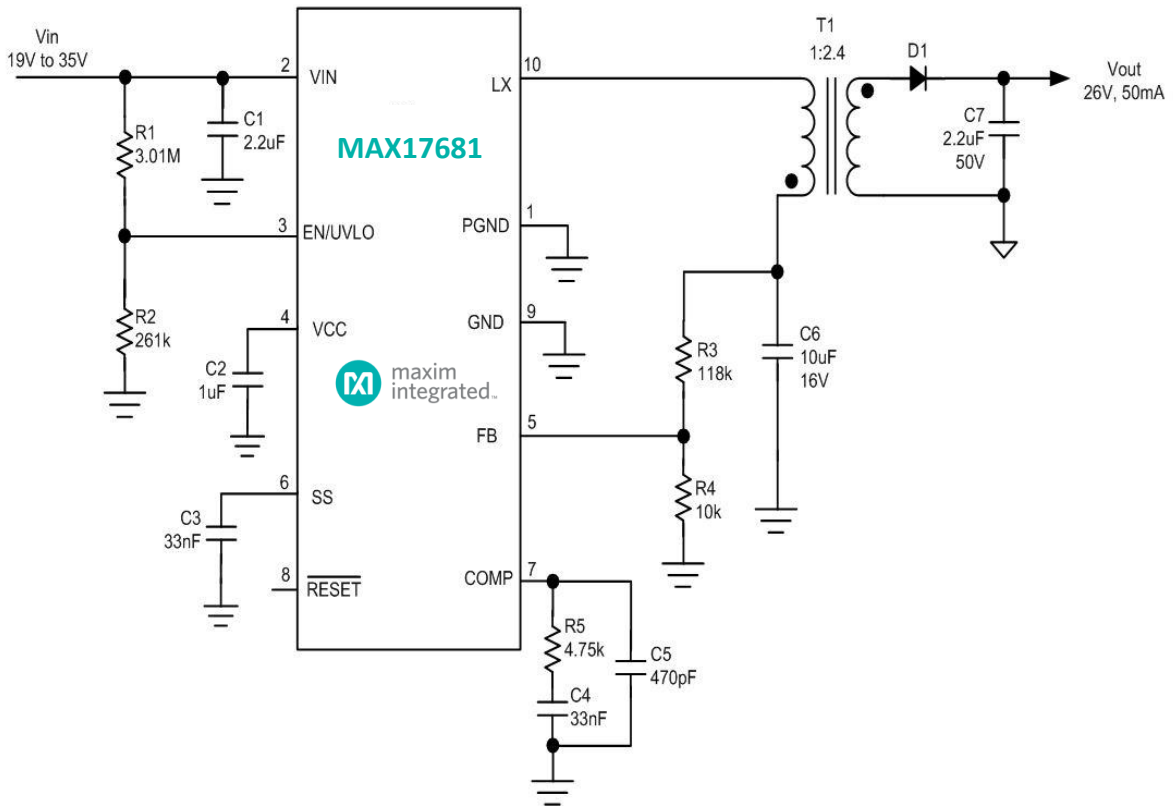

Delivers up to 5W of power

Outline

Isolation Overview

Isolator Technologies

Isolation Techniques for Power Path Feedback Loop

Summary

- Why isolation is needed?
- Isolation for signal and power paths
- Review of regulatory standards
- Review of isolator technologies: Optical, magnetic, and capacitive
- No-isolator techniques for power supply feedback loops: No-Opto Flyback & Iso-Buck

Anthony T. Huynh

Thong.Huynh@Maximintegrated.com

Thank You!