# Powering Devices Across the Isolation Barrier

APEC 2018 | LONG NGUYEN

# Agenda

- Why transfer power across the isolation barrier?
- Discrete vs. higher integration solutions
- Integration options and tradeoffs
  - External transformer
  - Internal transformer
  - Low-cost PCB transformer

# Why Transfer Power Across the Isolation Barrier?

AC Power Substation Control Center

- Isolation required to control HV system and protect operator
- Isolated grounds required between MCU and HV systems
- DC/DC converters are required to power HV output stages and MCU
- HV systems designers often too busy to spent time designing and characterizing isolated DC/DC

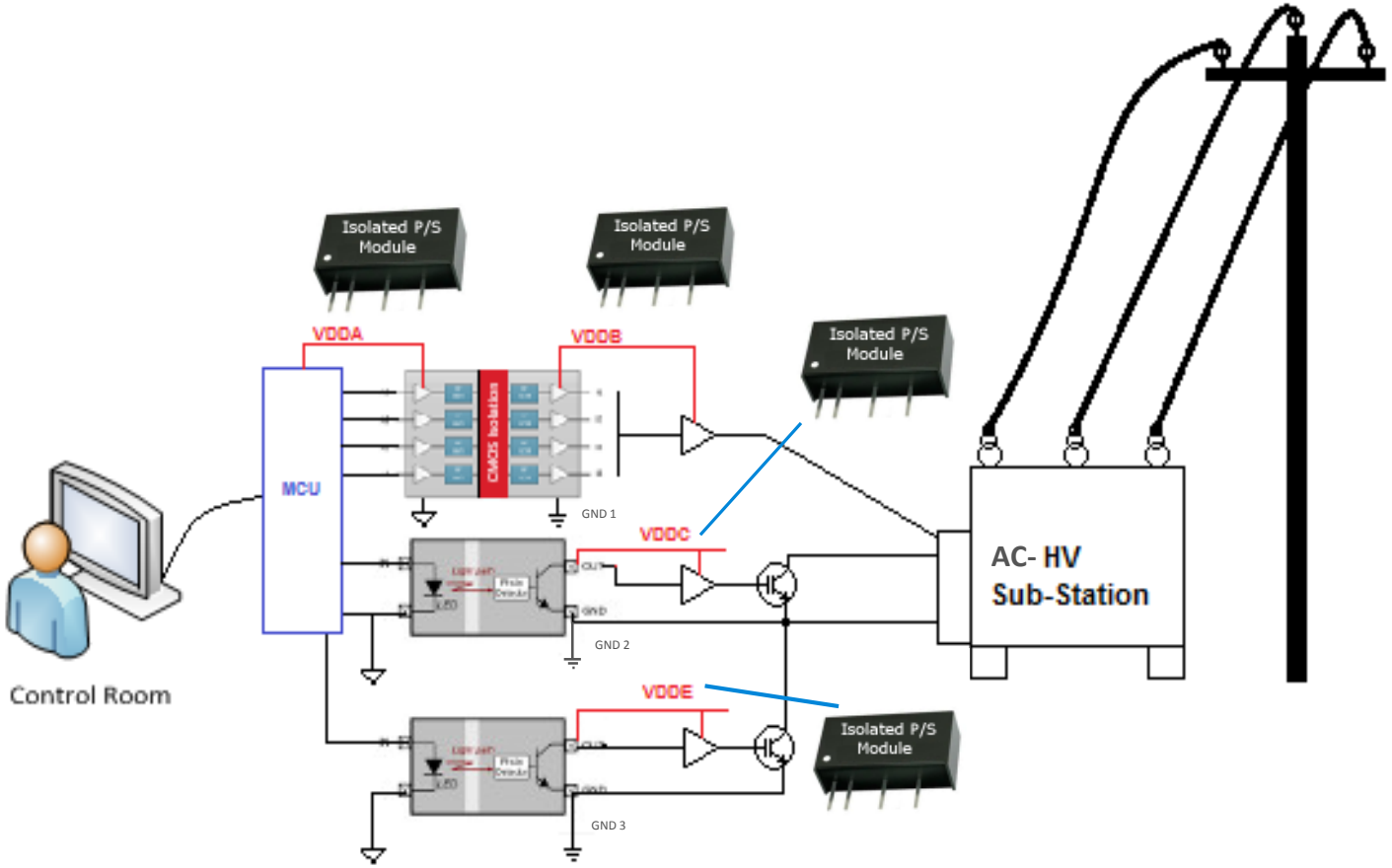

# From Discrete to Integrated Solutions

- DC-DC controller
- Isolated feedback
- Isolated transformer
- Integrated IsoVolt, Si88241 DC/DC solution

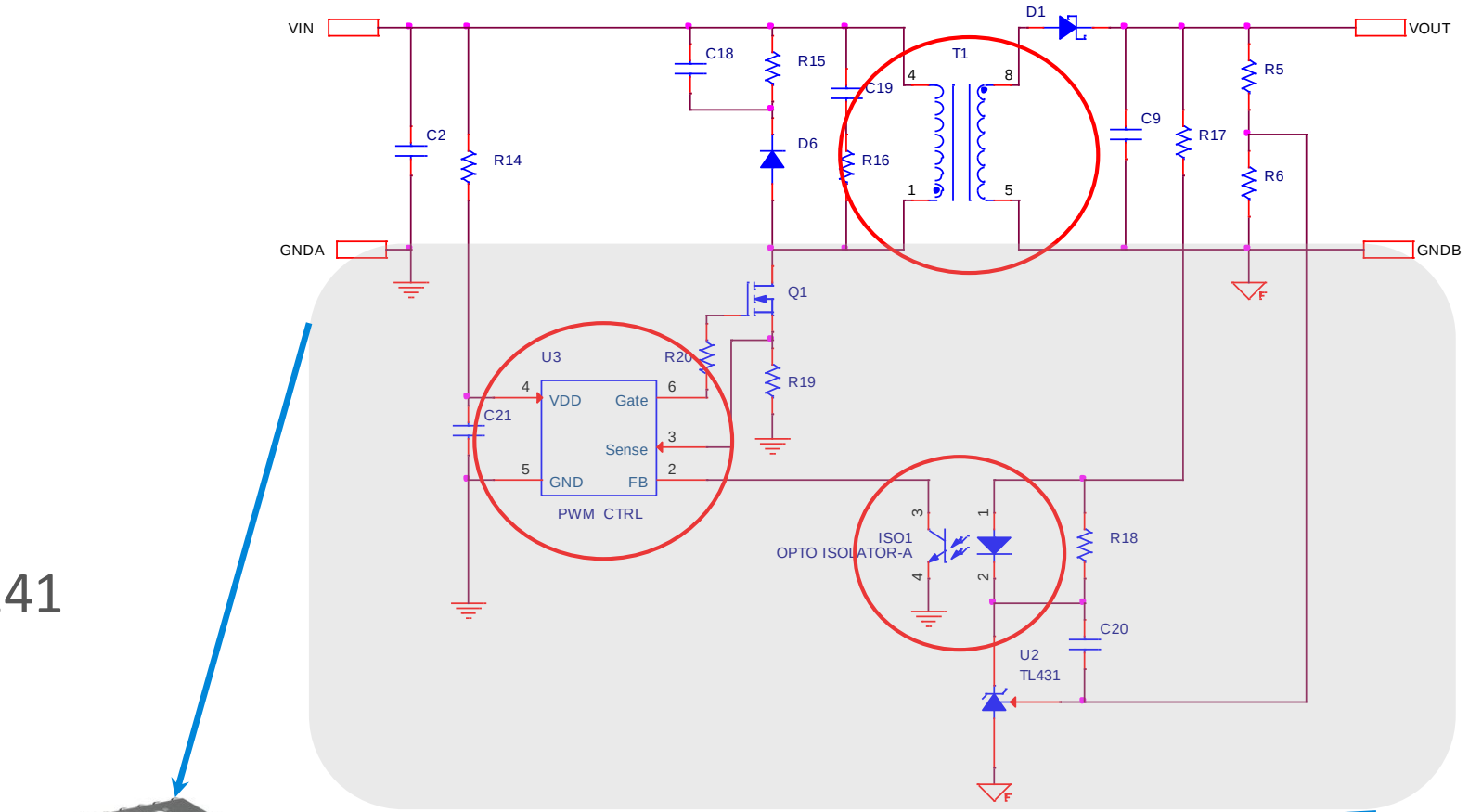


# Integrated Solution with External Transformer

- Example of isolators with built in isolated power

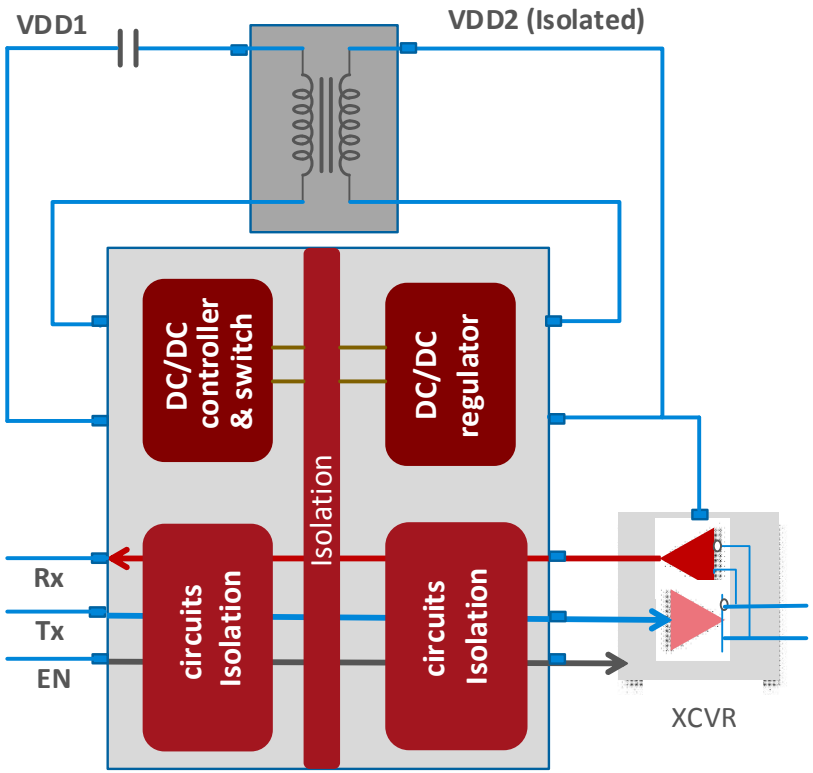


IsoVolt Si88xxx

# Turn-Key Solutions for Isolators with Integrated DC/DC

1. DC/DC with integrated switch (Vin_max = 5.5V, Pmax = 2W)
2. Wide input output voltage ranges (scalable Vin & Pout)
3. IGBT driver with integrated DC/DC
4. Efficiency up to 83%
5. Over load protection including shorted output condition

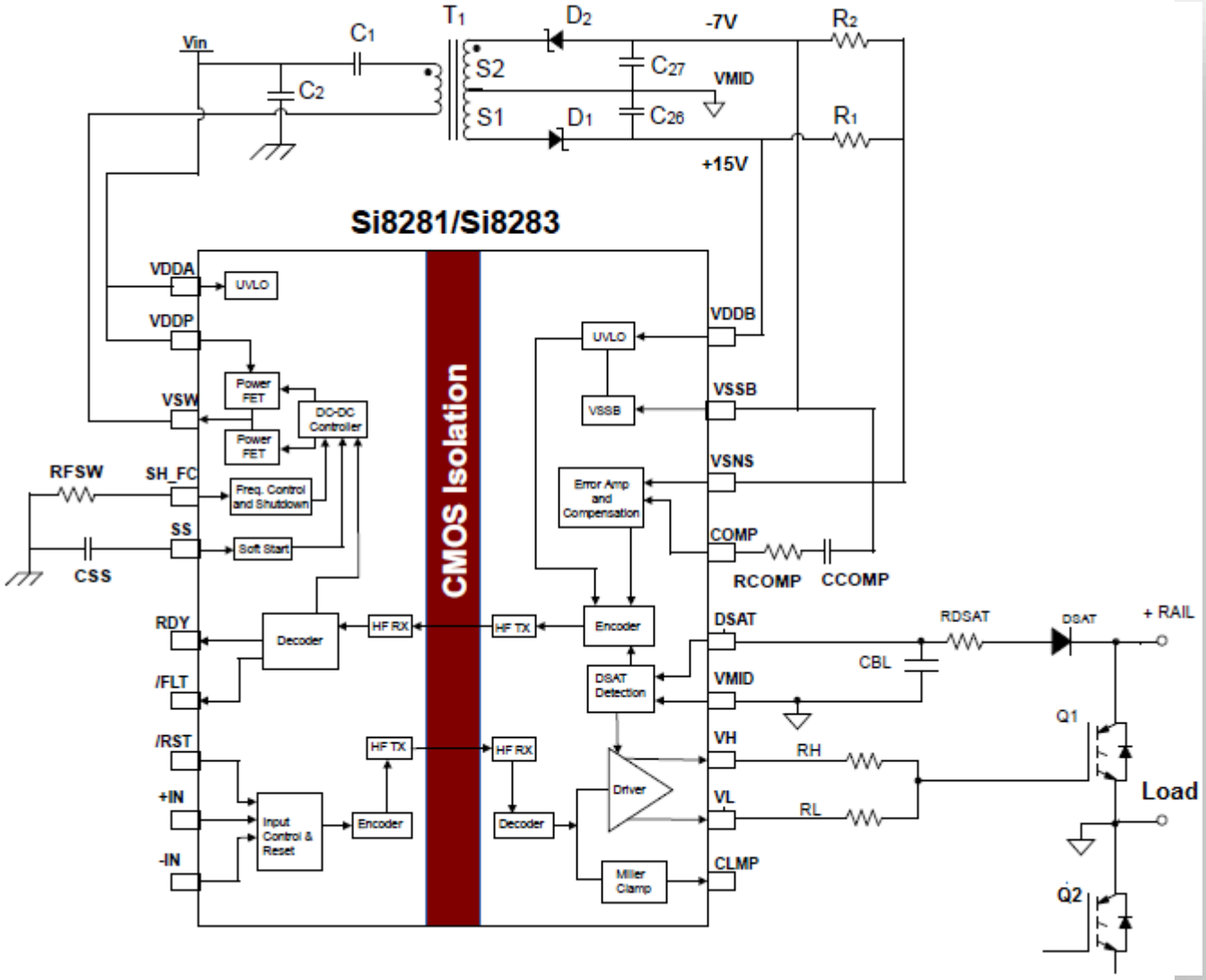

# EMI Considerations for Internal and External Transformer Solutions

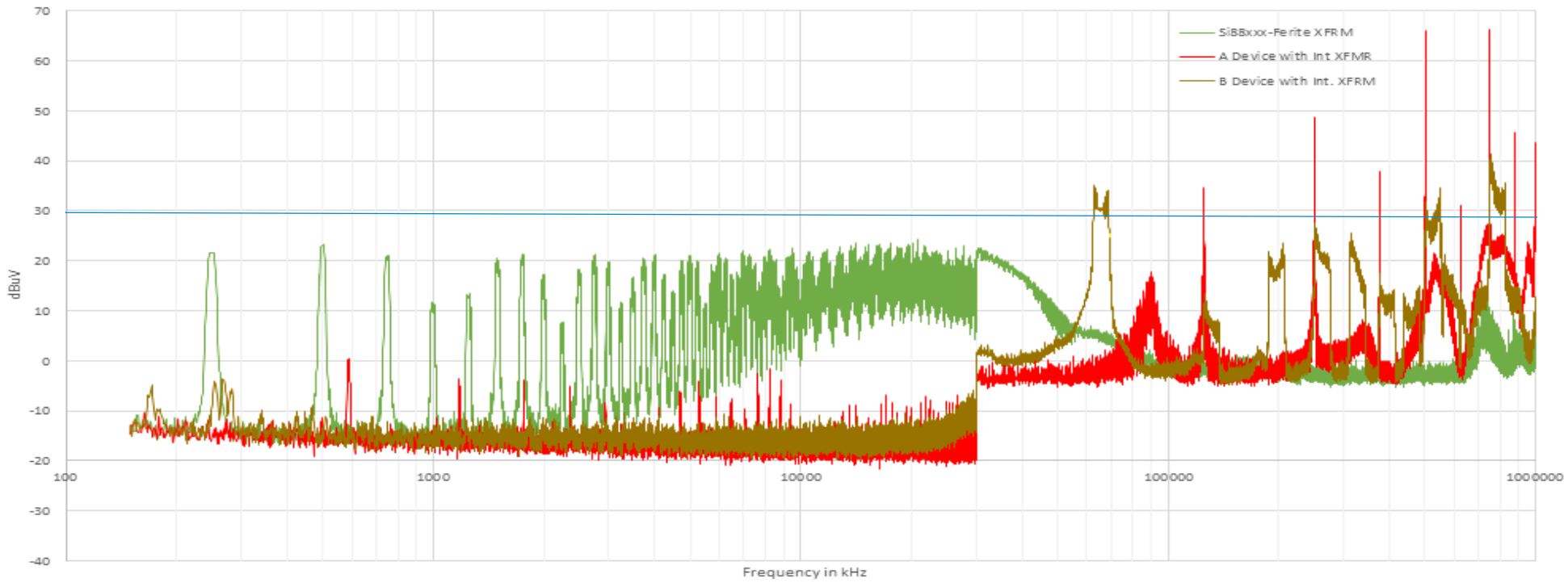


1. IsoVolt with ferrite core transformer (low fsw)
2. Off-The-Shelf device A with integrated XFMR (high fsw with narrow peaks)
3. Off-The-Shelf device B with integrated XFMR and spread spectrum on FSW (wide lower peaks)

# Low Cost PCB Transformer Implementations

- Ext. Isolated transformer with ferrite core
- Coreless PCB transformer
- Standard 4 layer FR4 PCB
- Uses layers 2&3 for maximum isolation
- FR4 provides safety insulation (40kV)
- Weakest link is distance vias-vias, vias-traces

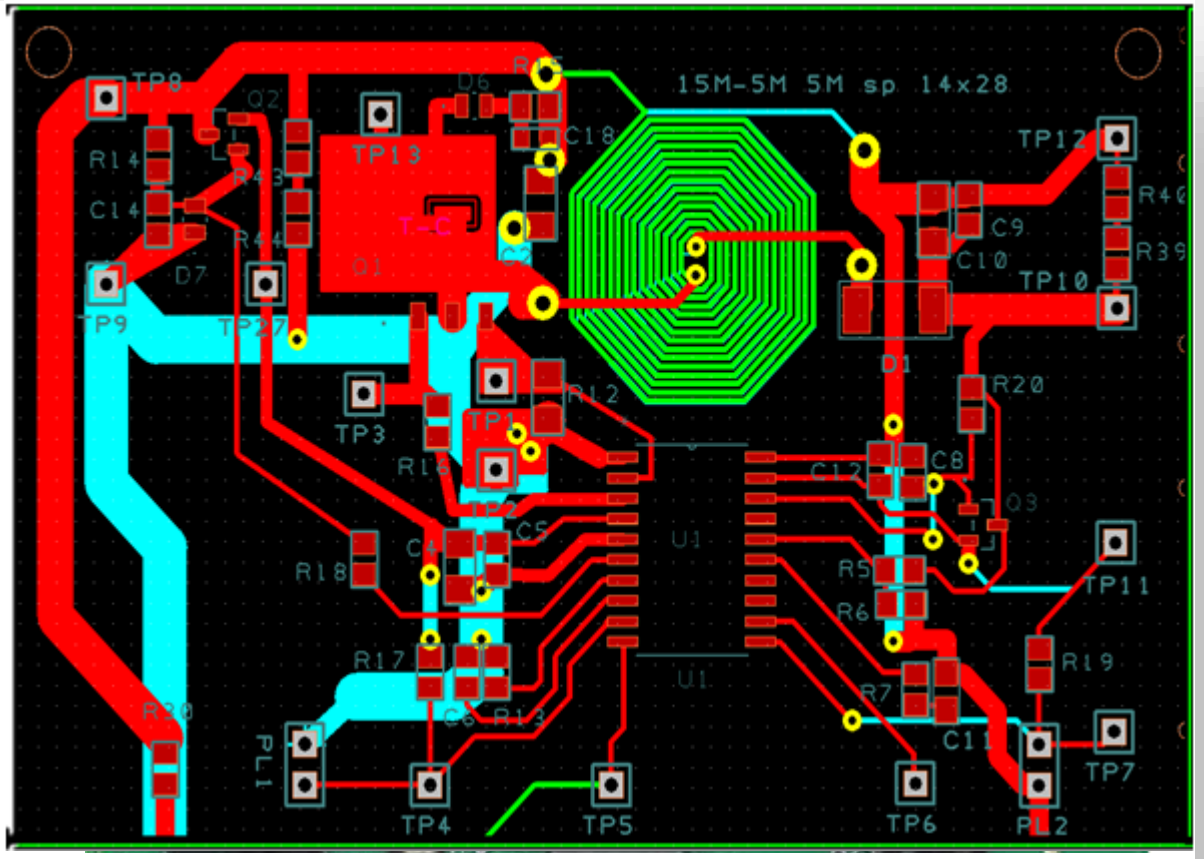


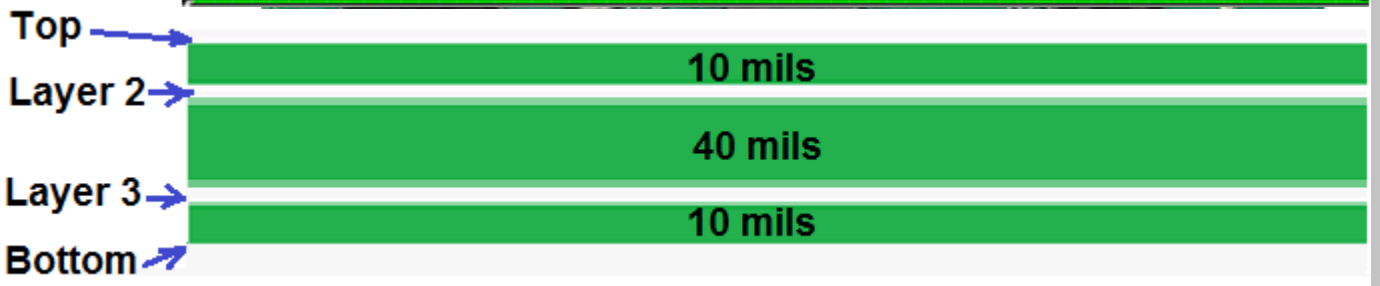


* FR4 dielectric strength is 800V/mil to 1.5kV/mil

# PCB Transformer Equations

1. Inductance equations for the spiral coil by Harold Wheeler (1928)
2. $L = 9.35\,\mu_o \frac{N^2 D_{avg}}{1+2.8\varphi}$
3. $D_{avg} = \frac{D+d}{2}$
4. $\varphi = \frac{D-d}{D+d}$
5. Two coils on 2 PCB layers form an air core transformer
6. Transformer mutual inductance is directly proportional to the distance between coils
7. $L_M = 2K_c\sqrt{L_1 L_2}$ (transformer mutual inductance)
8. Insulation performance and K coupling is inversely proportional

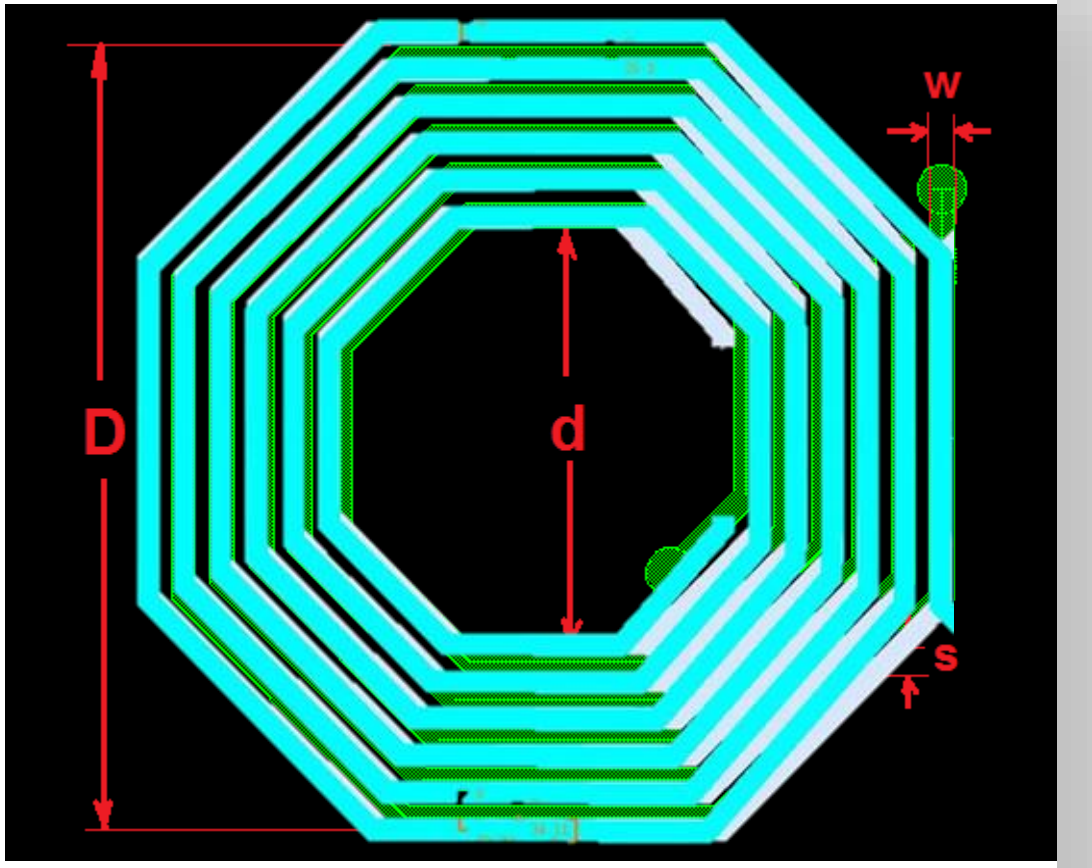

# Experimental Results

- Tested 6 PCB transformers
- Efficiency performance is greatly depended on the K coupling factor
- IsoVolt with PCB transformer performance is same as IC with integrated XFMR solution

| | N | Rp | Rs | Lp | $L_L$ | K | Eff | AC Hipot |
|---|---|---|---|---|---|---|---|---|
| T1 | 1.0 | 2.0 | 2.0 | 3.36uH | 2.2uH | 0.56 | 23.50% | >8kV |
| T2 | 1.4 | 1.9 | 4.9 | 3.63uH | 2.45uH | 0.57 | 25.20% | >8kV |
| T3 | 1.0 | 3.1 | 2.9 | 5.1uH | 3.7uH | 0.52 | 23.70% | >8kV |
| T4 | 1.9 | 1.9 | 6.3 | 2.98uH | 1.97uH | 0.58 | 28.00% | >8kV |

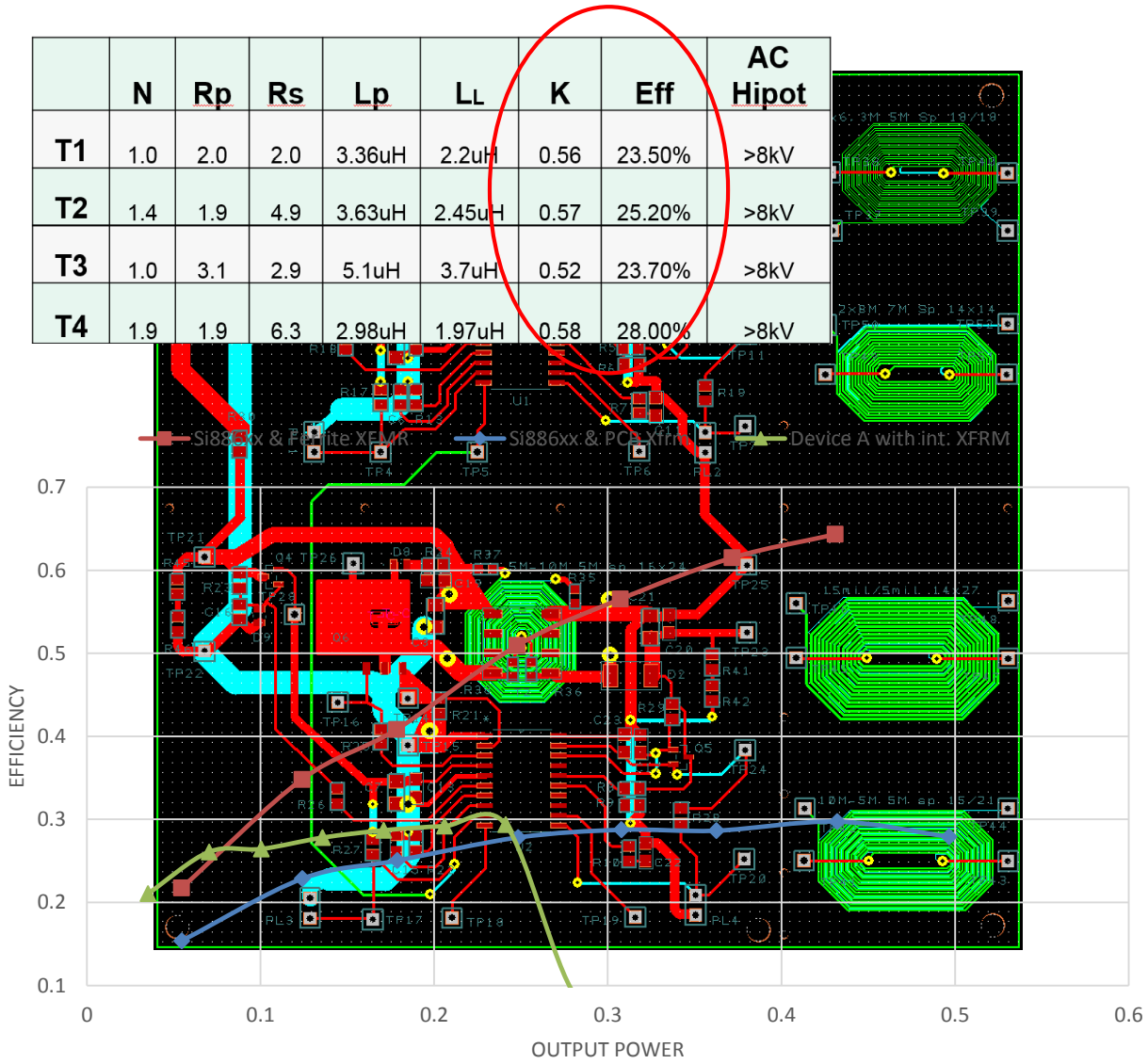

# Summary of Powering Across the Isolation Solutions

- Isolators/Drivers with integrated DC-DC are cost effective turn-key solutions
- Integrated DC-DC solution with external ferrite transformers offer
  - Higher power and efficiency
  - Larger size
- Internal transformer solutions offer
  - Smaller size
  - Reduced efficiency, power, and increased EMI
- A novel PCB transformer solution was demonstrated
  - Lower cost
  - Comparable efficiency and power to internal solutions
- The best solution for your application will depend on your system needs

# Thank you!

SILABS.COM