10A DC-DC Point-Of-Load Power Modules with Integrated Inductors and Capacitors less than 1.0mm Height for Mobile Platforms

Outline

- **Motivation**
  - Platform level challenges: space constraints and PDN bottlenecks
  - Power, Performance, and Area benefits of distributed power solutions
- **System Level Considerations**
  - Optimization for distributed, more granular power domains
  - Packaging Technology Solution
- **Measurements**
  - SiP and Power Module Evaluation
- **Conclusions**

Motivation

- Distributed Ultra-Compact Power Solutions
  - 5A-10A solutions, up to 10W sustained power and 3V-5V input
- Space Constraints and PCB routing challenges
- PDN Challenges – Platform Level Validation
  - Co-design and optimization of power delivery
  - Co-design and droop mitigation for CPU/GPU power domains
- PDN Challenges – Droop Mitigation
  - 1-10ns load transient challenge
  - 100ns load transient challenge

Space Constraints and PCB Routing Challenges

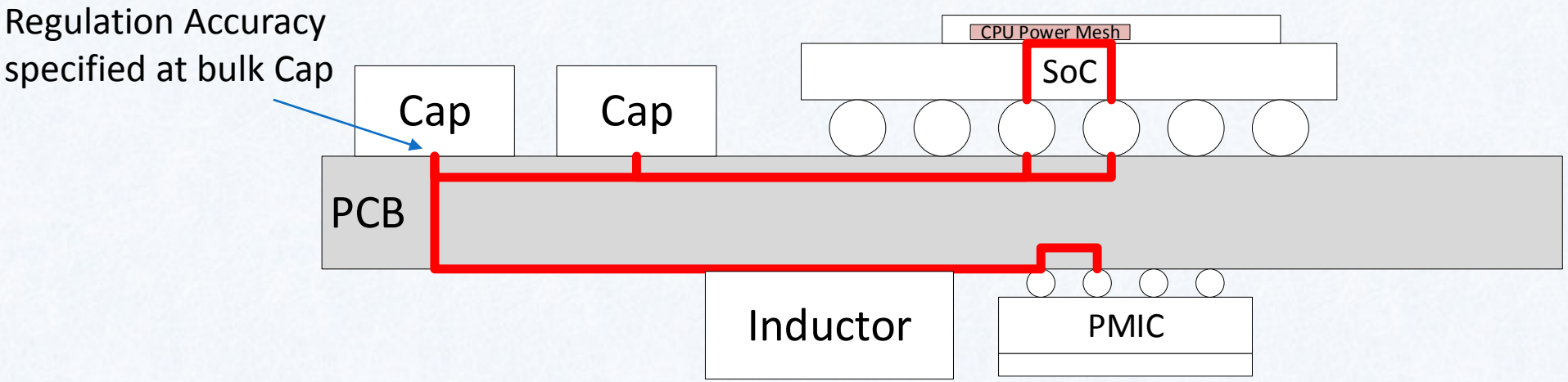

- Conventional DC-DC solutions with <5MHz switching frequencies require large inductors and array of low-ESL capacitors
- PCB routing losses need to be included in the overall efficiency calculations
- Fully integrated, POL modules or in-package integration needed to address these challenges

PDN Challenges – Platform Level Validation

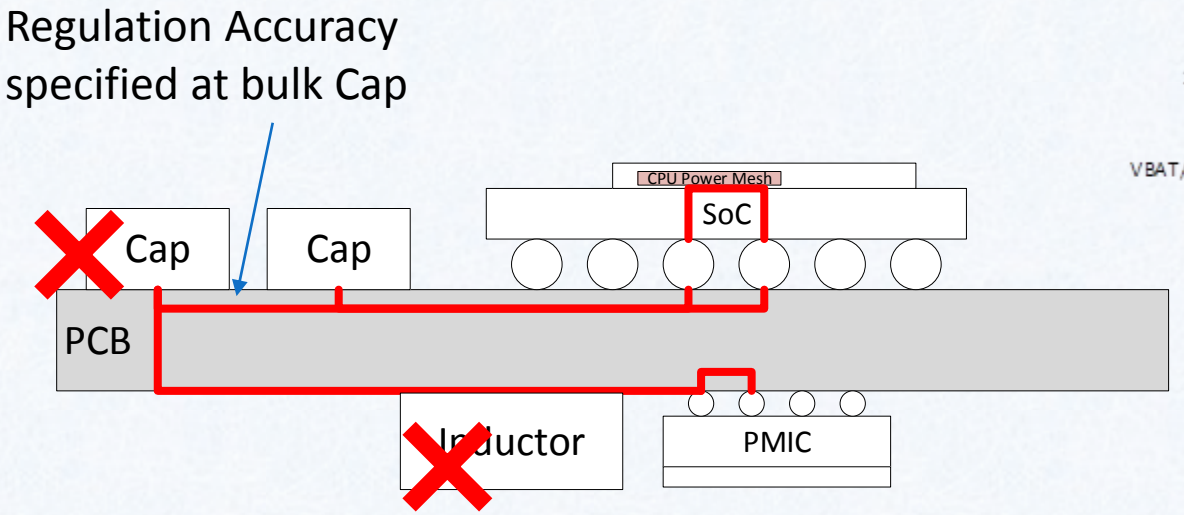

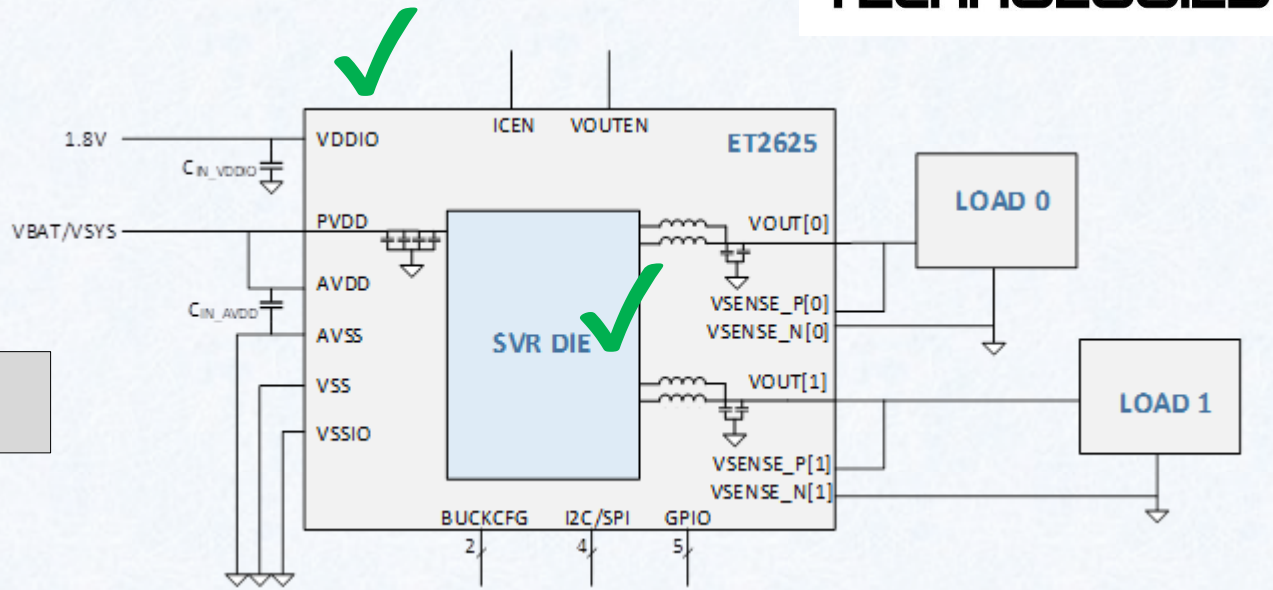

- PMIC evaluation performed with oversized components on “ideal” PCB. Final product validation performed without components.
- Regulation accuracy needs to be specified at the CPU power mesh
- Fully integrated module validation includes all components and critical routing

PDN Challenges – Droop Mitigation

- **L*dI/dt voltage drop across the parasitic inductance**
  - Current solutions rely on low-ESL capacitor array for fast load transients which is limited by the number of capacitors that can be placed in parallel next to SoC
- **R * I voltage drop across the parasitic resistance**
  - Remote sense technique is useful only for partial compensation of IR drop and only if fast load transients supported. It does not help in worst case of 0->Imax transition.
- **On-chip design solutions required to address PDN challenges**
  - 1ns-10ns load transients best handled by on-chip droop mitigation solutions
  - Droop mitigation solution such as Endura eTC™ can be extended up to 50ns
  - Voltage regulation need to seamlessly overlap the response of droop mitigation

Technical Approach

- **Active Transient Control – Integrated within CPU/GPU**
  - Gen2 eTC 10nm FF [presented at ISSCC 2017]
  - Gen3 10nm FF integrated into product
  - Gen4 eTC 12nm/7nm [to be published]
- **SiP solutions - Embedded Voltage Regulator (eVR)**
  - [presented at 3D-PEIM, 2018]
- **Ultra-Compact module solutions – Fully integrated modules**
  - Mobile Platforms (Area=18mm^2, Thickness= 0.9mm)
  - Server/Industrial Platforms (Area=25mm^2, Thickness=1.2mm)

DROOP MITIGATION <10ns Load Transients

FAST DVFS ~100ns Load Transient

COMPACT DISTRIBUTED MODULES Point of Load

Power Module Package Solution

- Package information
  - ET262x Size: 6.0x4.3x1.15; 0.4mm pitch Micro-BGA
  - ET261x Size: 4.8x3.7x0.85; 0.4mm pitch Micro-BGA
  - Assembly: one flip chip die and 12 passives using chip shooter

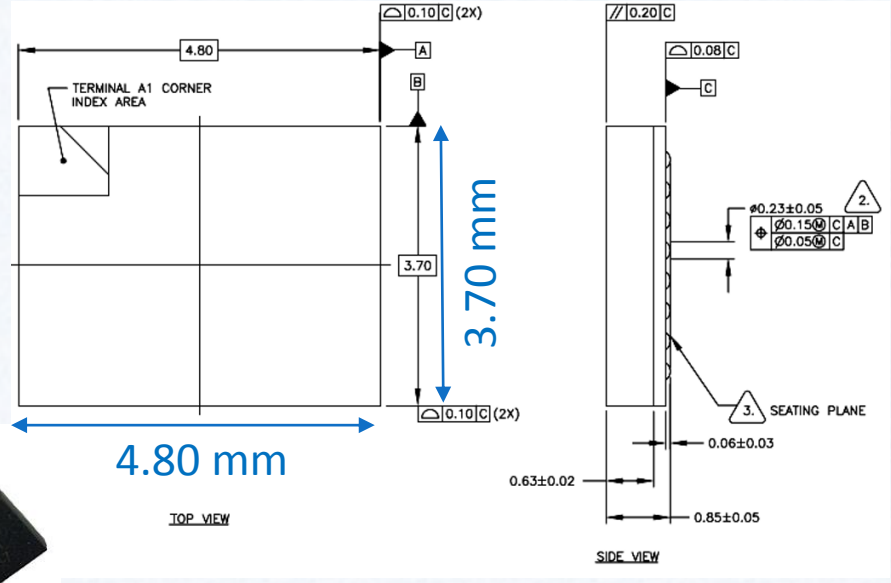

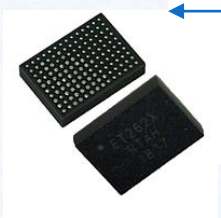

- Summary of Packaging Solution Requirements
  - Thin substrate (0.16mm coreless) vs thicker mold cap (0.63mm and 0.93mm for ET261x and ET262x)
  - High density SMT component population on thin substrate:
  - Micro-BGA ball attachment (0.15mm BGA ball): 60um height

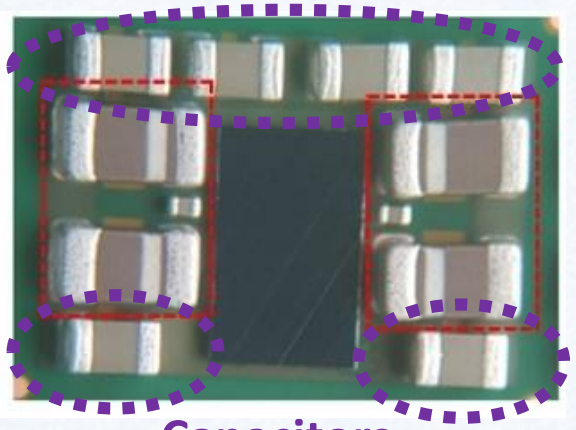

Ultra-Compact Power Module Solutions

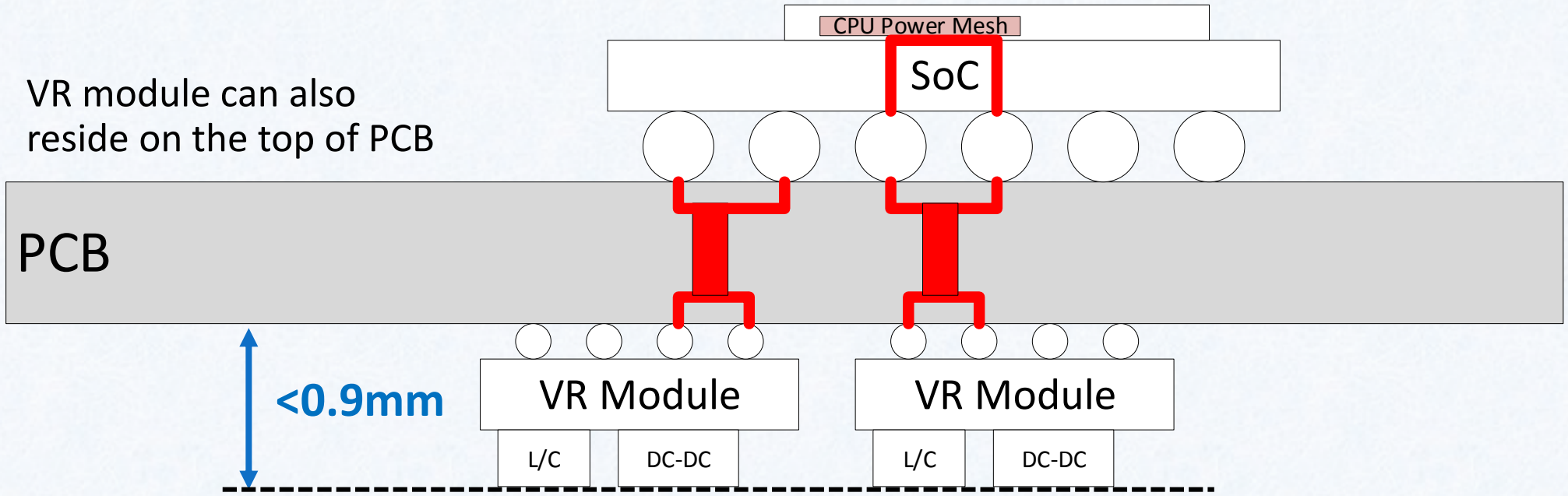

- Fully integrated compact module with less than 0.9mm height
  - Provides easy adoption and faster TTM without SoC package re-design
  - Significant PCB area reduction with integrated inductors and capacitors
  - PCB routing minimized with significant reduction of losses

SiP integration in SoC Package

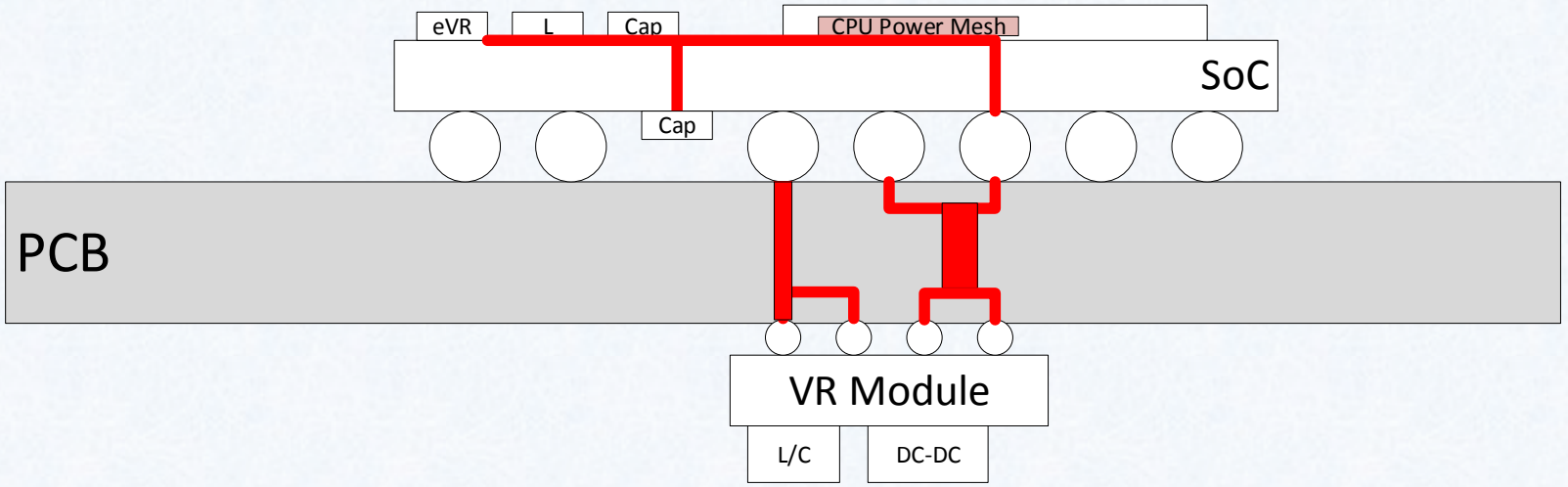

- 130MHz, 6A, 3-phase 1.8V input voltage DC-DC implemented in 1mm^3
- Programmable internal clock from 13MHz – 130MHz
- Inductor and capacitor determined based on transient response and total regulation accuracy including ripple at power mesh

Measurements: SiP and Power Module

- Measurement configurations and evaluation board
- 130MHz SiP Solution Advantages
  - Fast start-up
  - Fast Dynamic Voltage Control (DVC)
  - Fast load transient
  - Switching frequency vs Inductor values
- Extending the solution to Power module with Li Ion battery input
  - Efficiency: SiP solution and Power Module
  - Thermal performance: 10A, 10W, 10MHz Power Module
  - Benefits of Load Line regulation

Evaluation Board and Configurations

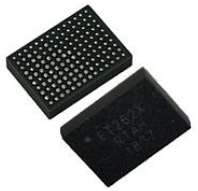

Fully Integrated Power Module for distributed power on PCB

- Vin : 3.0V – 5.5V, Fsw : 10MHz
- Imax : 10A, Max. Power: 10W

SiP prototype suitable for PoP integration

- (2.5mm x 2.0mm, T<0.2mm)
- Vin : 1.6V to 2.0V
- Fsw : 13MHz to 130MHz
- Imax : 6A

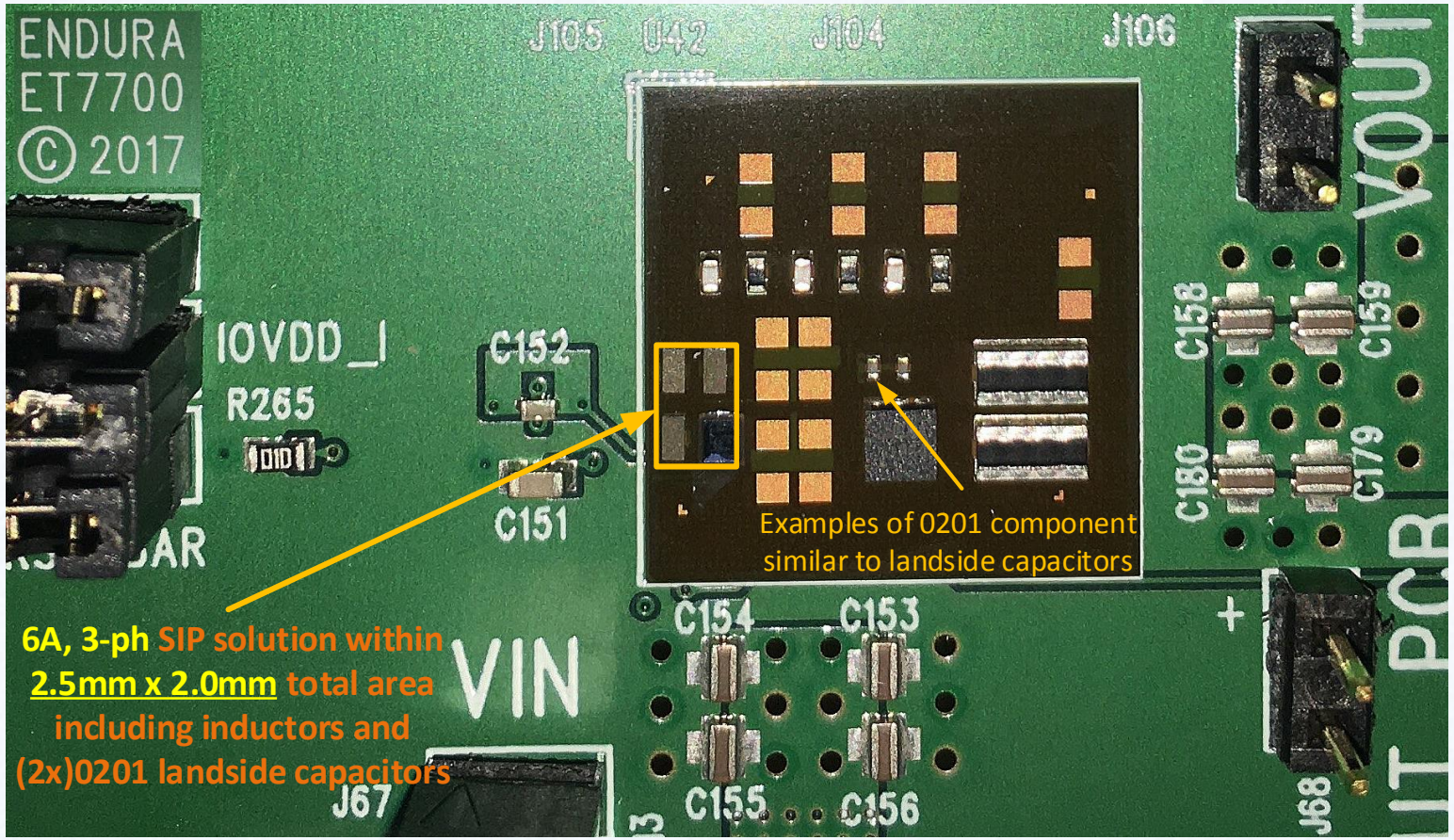

Fast Start-Up

- Dormant to regulation in 200ns
- Ability to provide regulation for the entire load range at 200ns

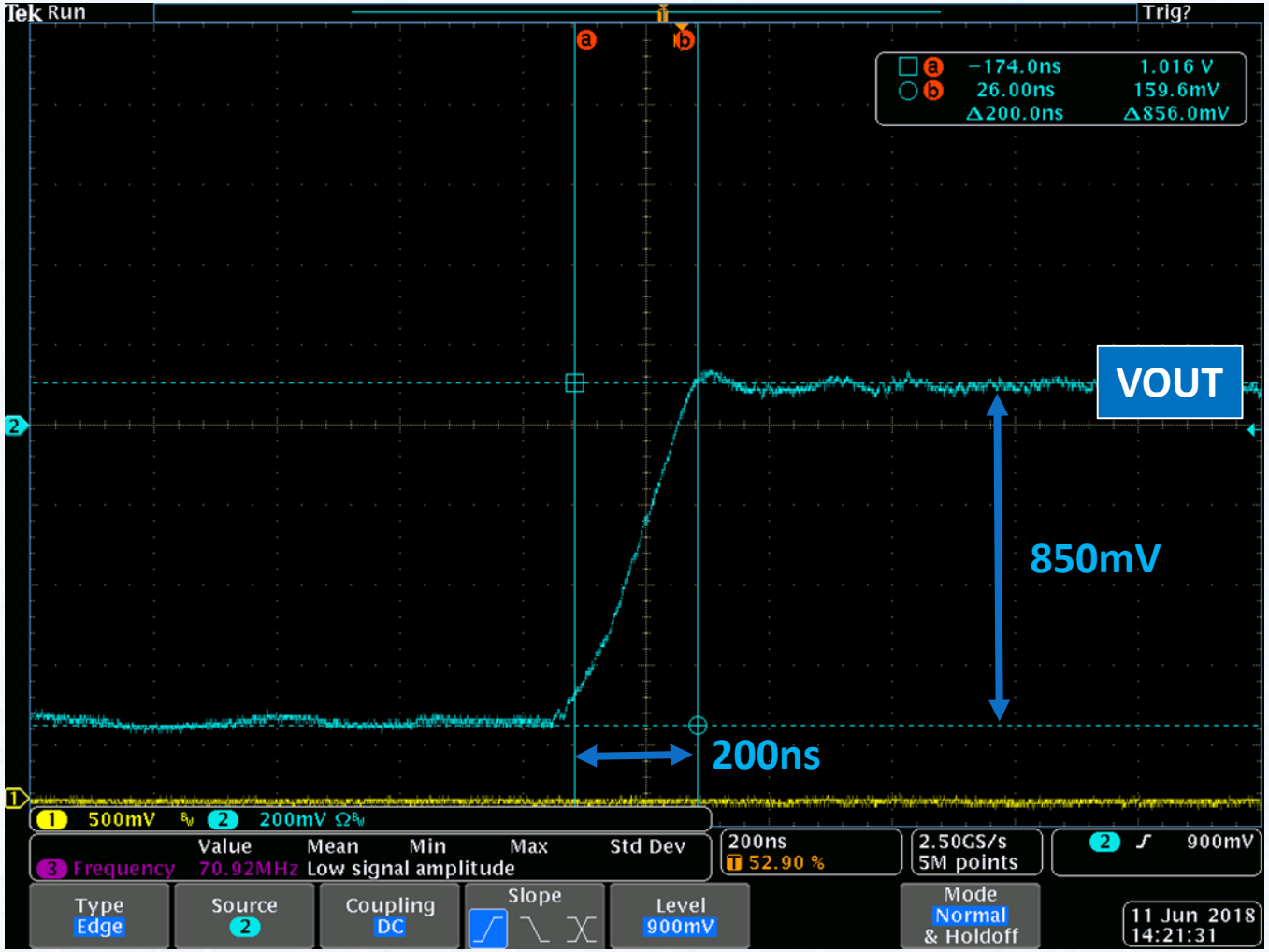

Fast Dynamic Voltage Control (DVC)

- Fast DVC : 400mV / 120ns
- Suitable for High Definition Dynamic Voltage and Frequency Scaling (DVFS) control of SoC power domains

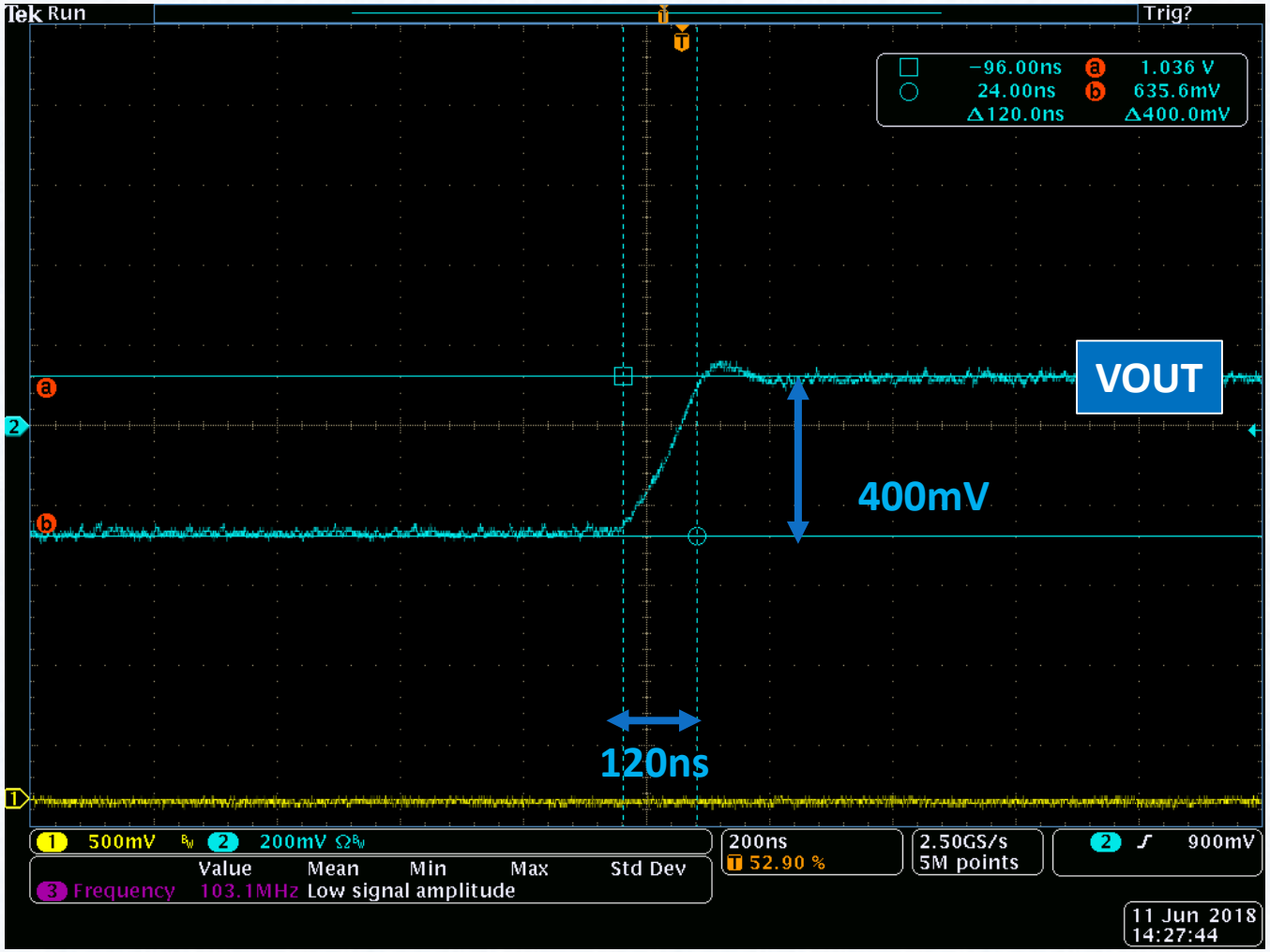

Fast Load Transient

- Load Transient:
  - 1.5A → 4.5A in 100ns
  - 4.5A → 1.5A in 100ns

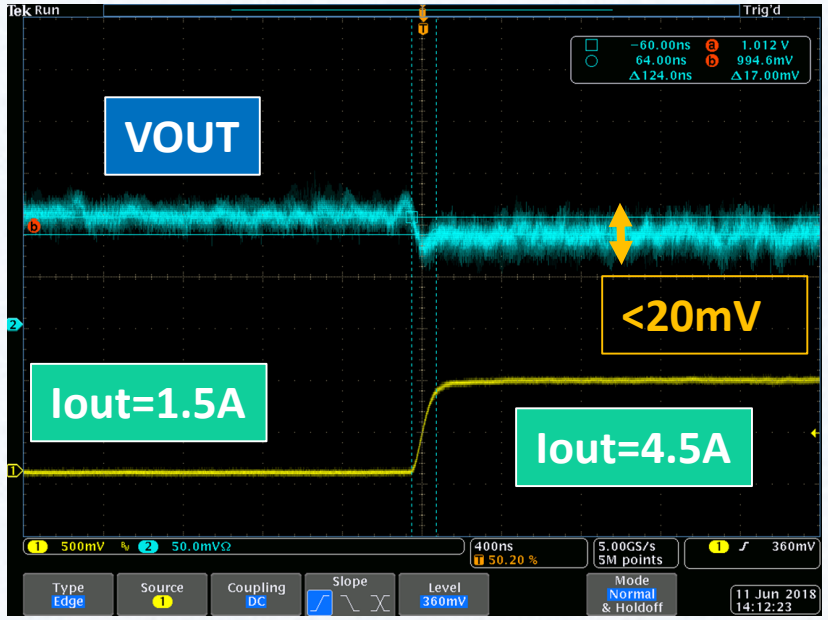

Zoomed in showing light load to high load transient

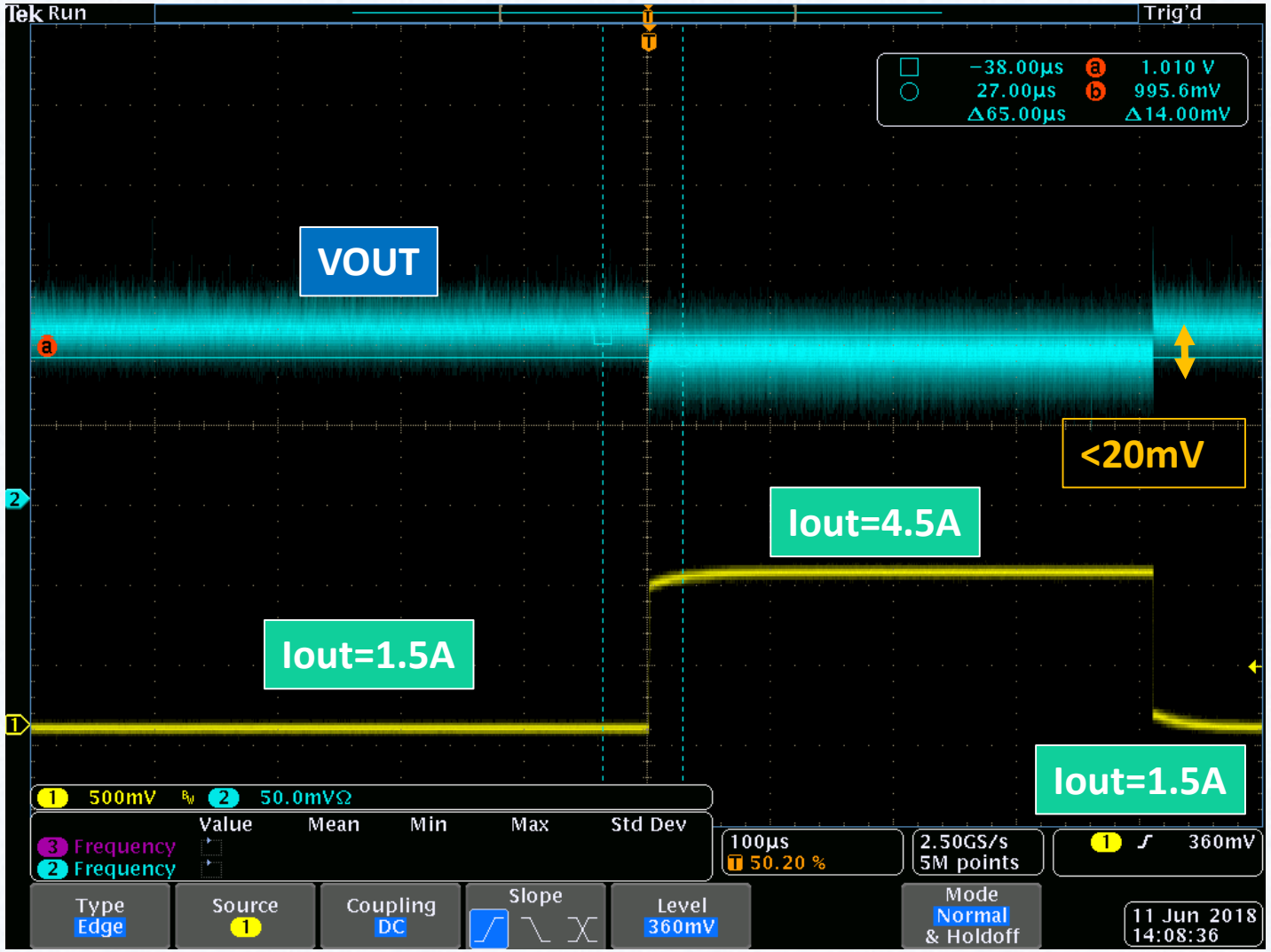

Switching Frequency vs Inductors

- Optimum switching frequency for maximum efficiency
  - SiP solution: L = 2nH – 10nH
  - Power Module: L = 60nH
- Switching loss vs RDSon optimized to achieve >85% efficiency for the entire load range
  - SiP solution: Imax up to 6A
  - Power Module: Imax up to 10A

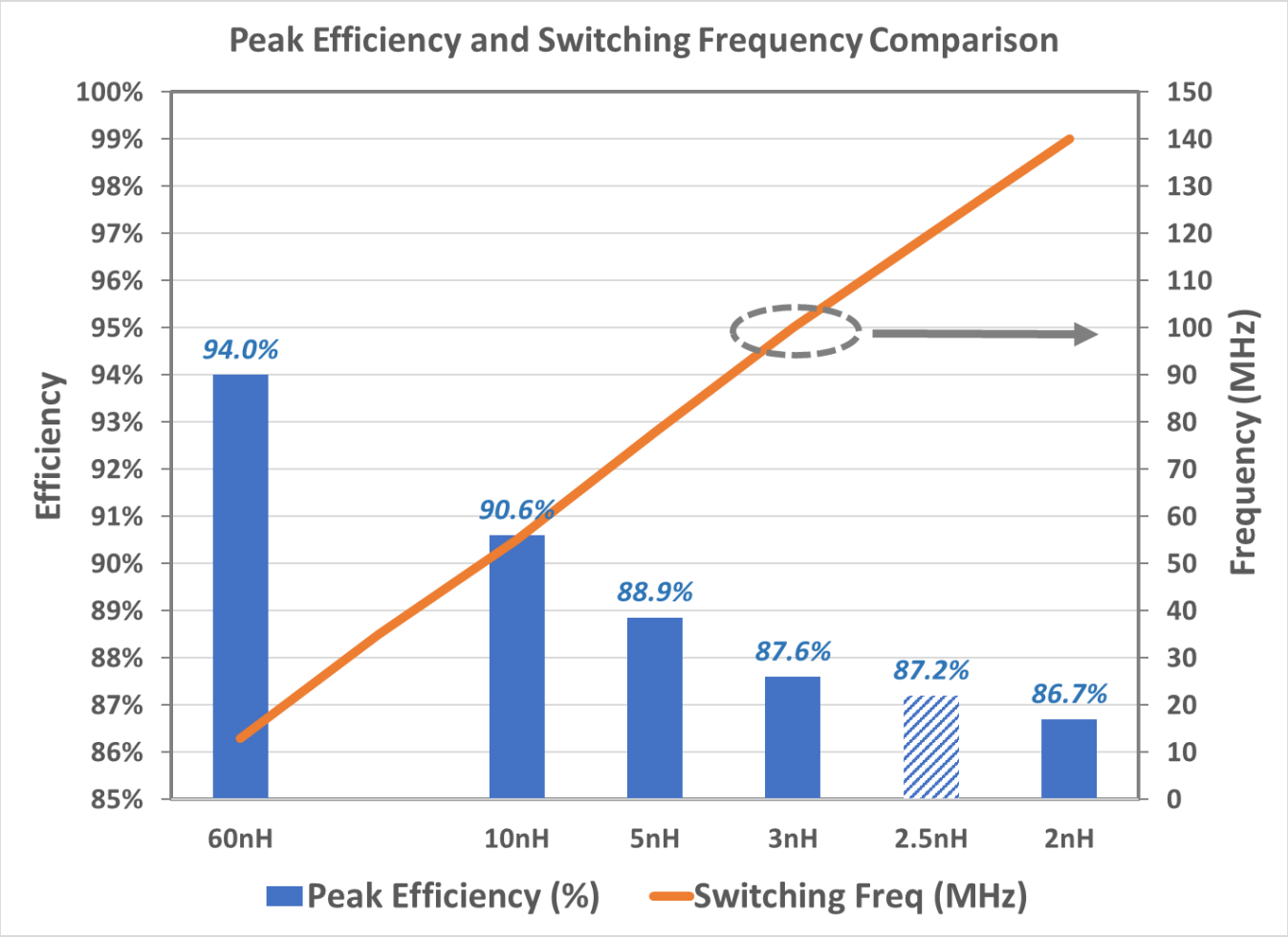

ET7730 Efficiency Measurements

- 3-phase, up to 2A/phase
- Single mode operation for the current load range 20mA to 6A
  - Seamless DCM/PFM to CCM/PWM transition
  - Seamless phase-shedding
- >88% efficiency up to 2.5A (SiP) with 10nH inductors
- 94% efficiency with 0.5mm thick 1.0mm x 0.5mm footprint 60nH inductors (module)

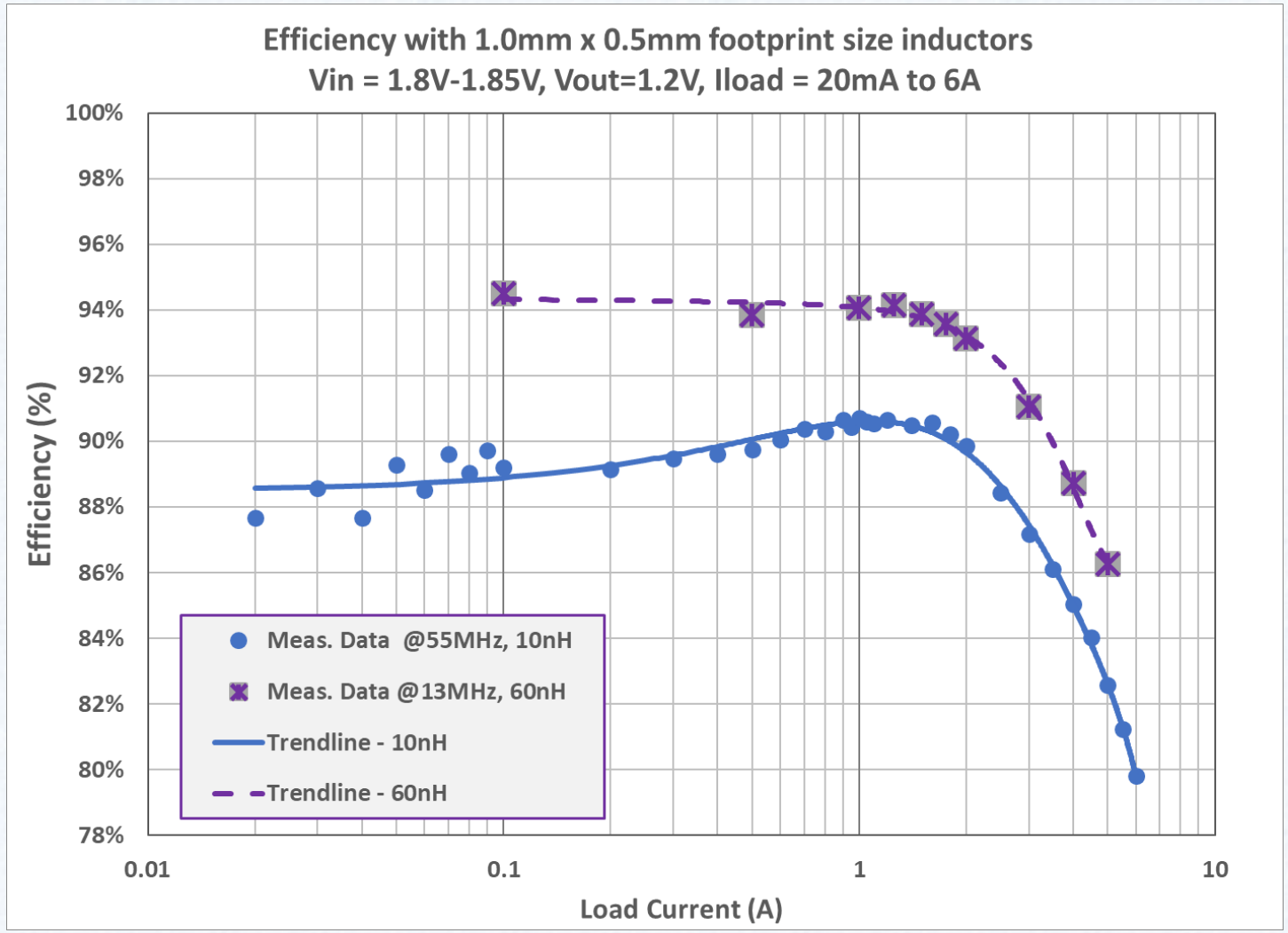

Fully Integrated Module Efficiency

- Single or Dual output configurations with Li Ion battery input (Vin = 3.0V→5.5V)
  - 4-phase 10A
  - 2x2-phase 2x5A

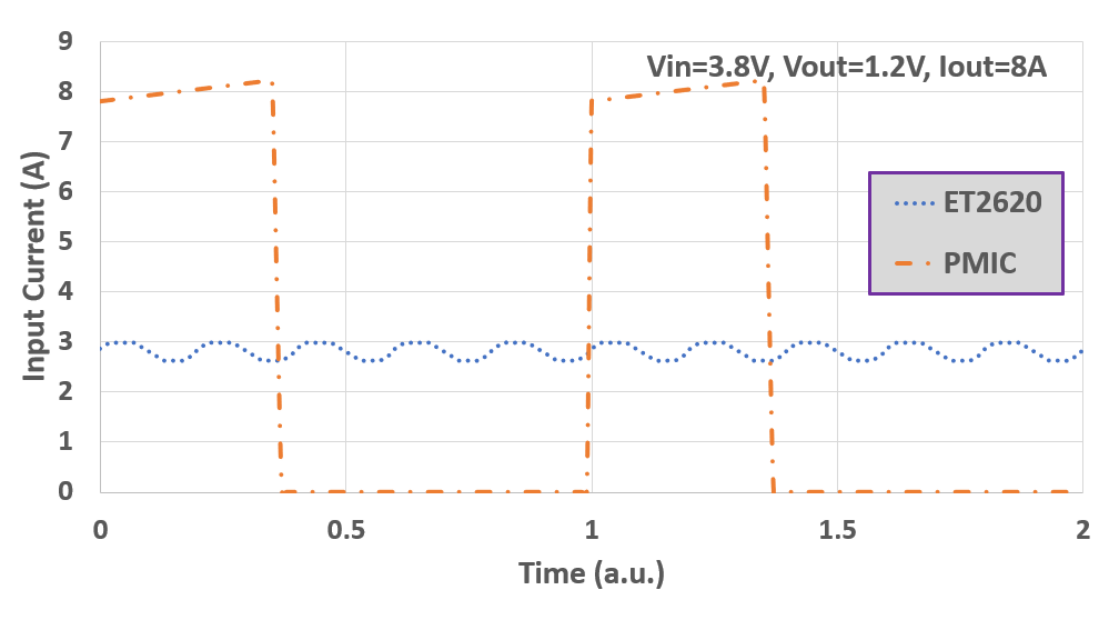

High input peak current with additional rms losses

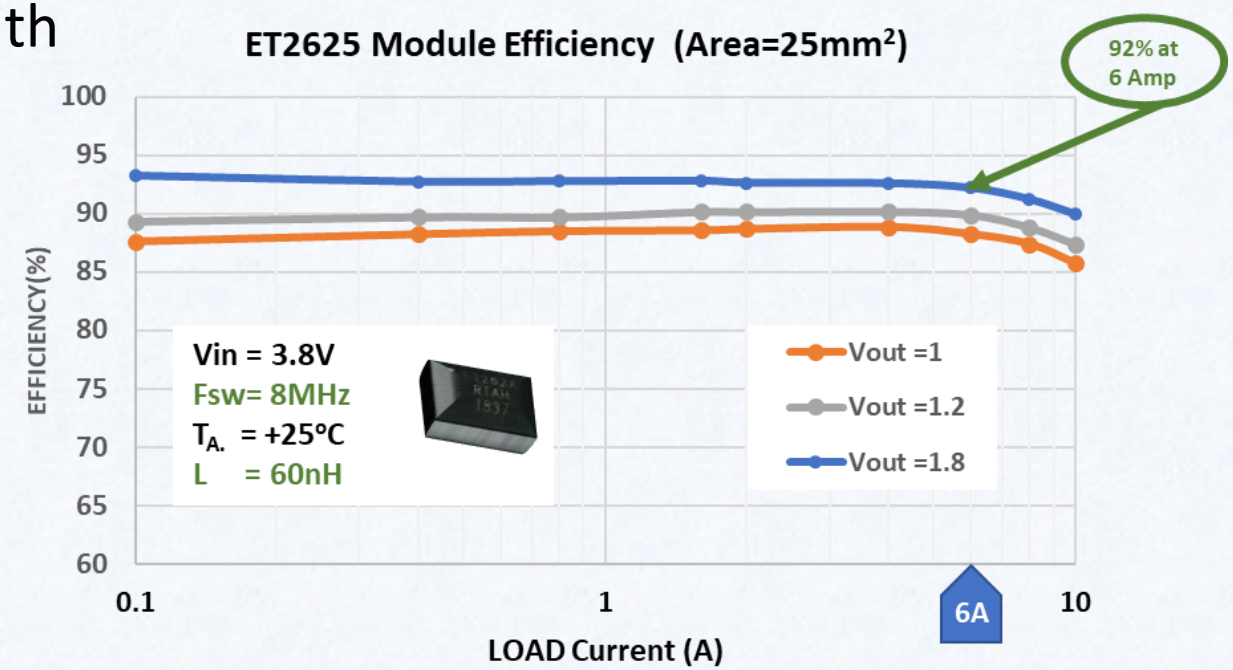

Multi-phase with integrated input capacitor

- No additional peak current losses at the input
- High current single phase PMIC has <u>additional</u> 3%-4% loss in platform

Thermal Measurements

- 10A, 10W, 10MHz Fully Integrated Power Module
  - Sustained 5W delivery at 40C (20C above ambient)
  - Sustained 10W delivery at 70C (50C above ambient)

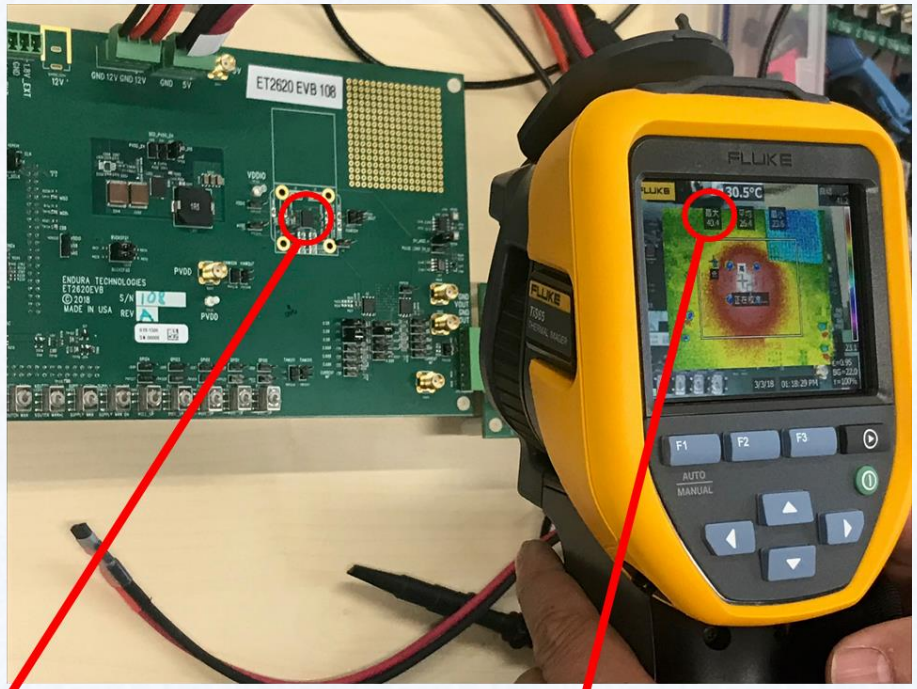

ET2620 Module

Iout= **5Amps** , 40 Degree C

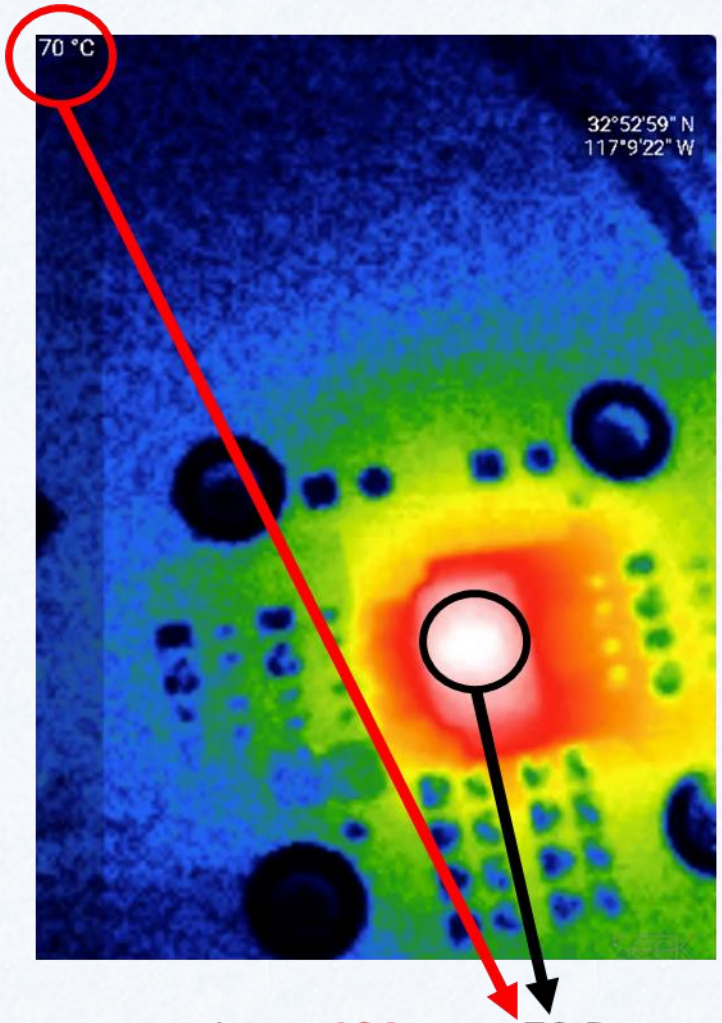

Iout= **10Amps** , 70 Degree C

Demonstration of Load Line Regulation

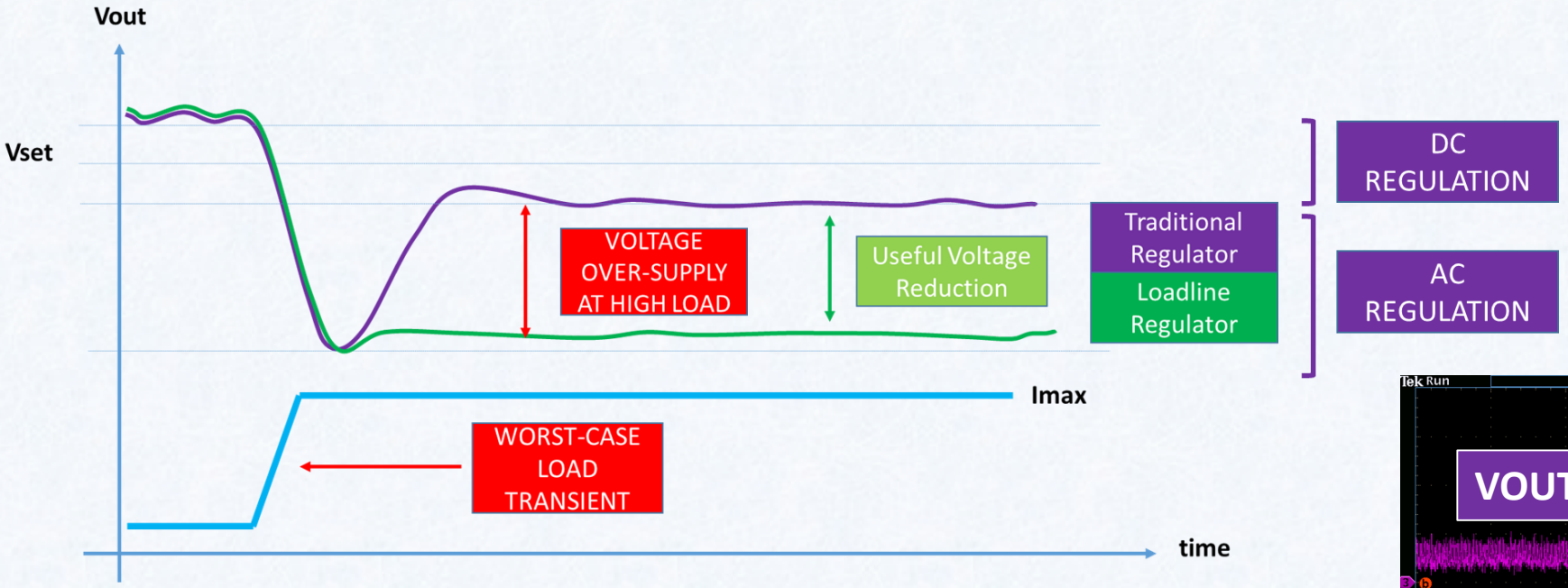

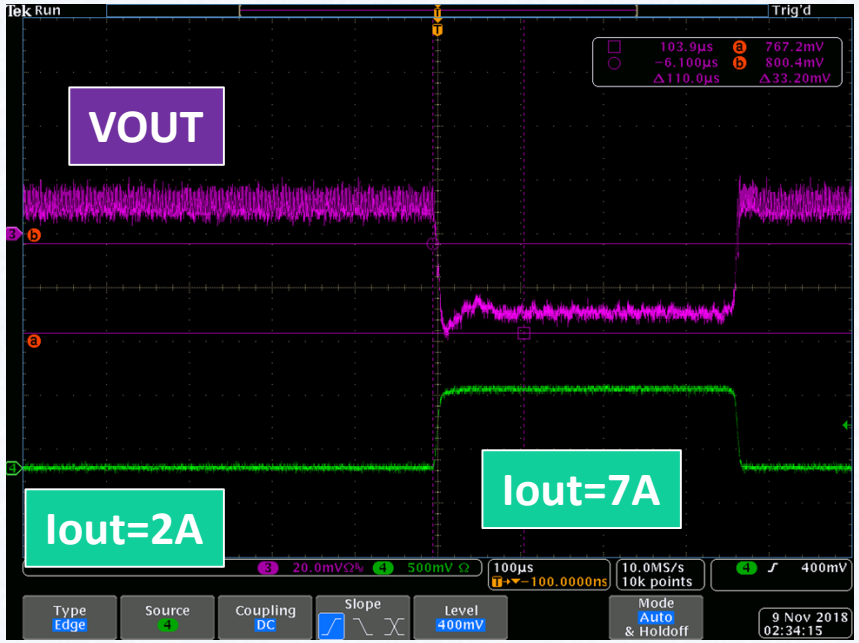

- ET2620 load line with 5A load step transient
- Step response with DC regulation optimized to match AC regulation in fully integrated module

Distributed Power Solutions

- System level optimization require compact flexible solutions
  - Fast DVFS require fast switching frequencies and smaller output capacitors
  - Fast switching regulators implemented at point of load may require lower input voltage
  - Fully integrated module solutions allow full control of components and minimize routing of high frequency switching nodes
  - Best optimization achieved by integrating the power delivery solution in the packaged product or power modules with integrated components
- Co-design power solution from battery to CPU/GPU power mesh with SoC Team
  - Active Transient Control – Integrated within CPU/GPU
  - SiP solutions - Embedded Voltage Regulator (eVR)
  - Compact module solutions – Fully integrated modules

Conclusions

- Power Management and SoC Requirements
  - Defining regulation on PCB capacitor is inadequate
  - Need to define Vmin at SoC power mesh at max clock frequency target and worst case load transient
  - Regulation requirements need to be reconsidered based on Vmin (power saving with load line)
  - Power savings of up to 20% can be achieved with granular power and fast dynamic voltage control
- Distributed Power Solutions
  - Embedded Voltage Regulator (eVR) for SiP integration
    - Fast start-up in 200ns for power savings in frequent burst mode operations and power cycling
    - Fast Dynamic Voltage Control for high definition DVFS with ramp rate >3V/µs
    - Fast switching frequency for up to 1A/30ns load transients
    - Fast switching frequency for up to 30mV DVFS set point in 10ns
  - Fully Integrated Compact Power Modules
    - Can be placed very close to power domains without additional routing to/from components
    - Validation and testing include actual inductor and capacitor components

THANK YOU!