WÜRTH ELEKTRONIK

Accurate Estimation of Losses of Power Inductor in Power Electronics Applications

By:
Jochen Baier
Würth Elektronik eiSos, Waldenburg, Germany

APEC 2016, Long Beach, CA

Table of Contents

Introduction

- Applications of Power Inductor in Power Electronics & the necessity to estimate losses accurately

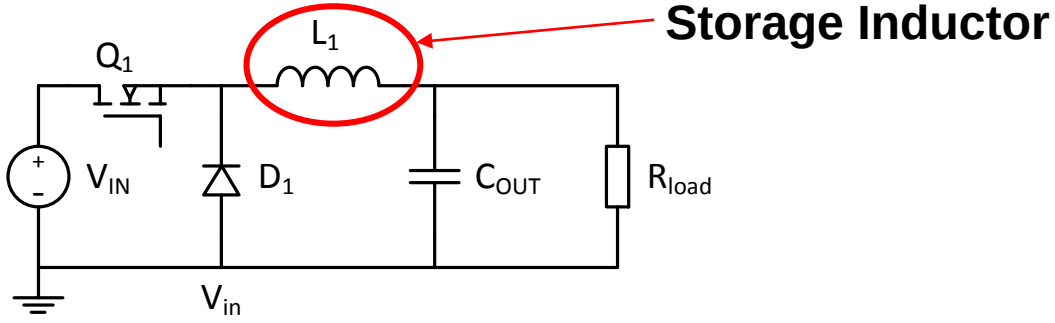

Fig:1 Buck Converter

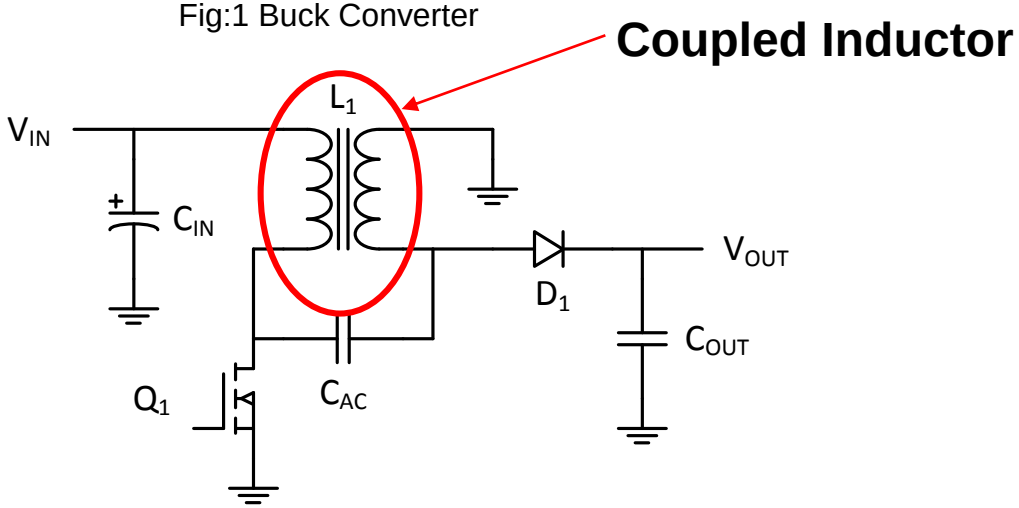

Fig 2: SEPIC Converter

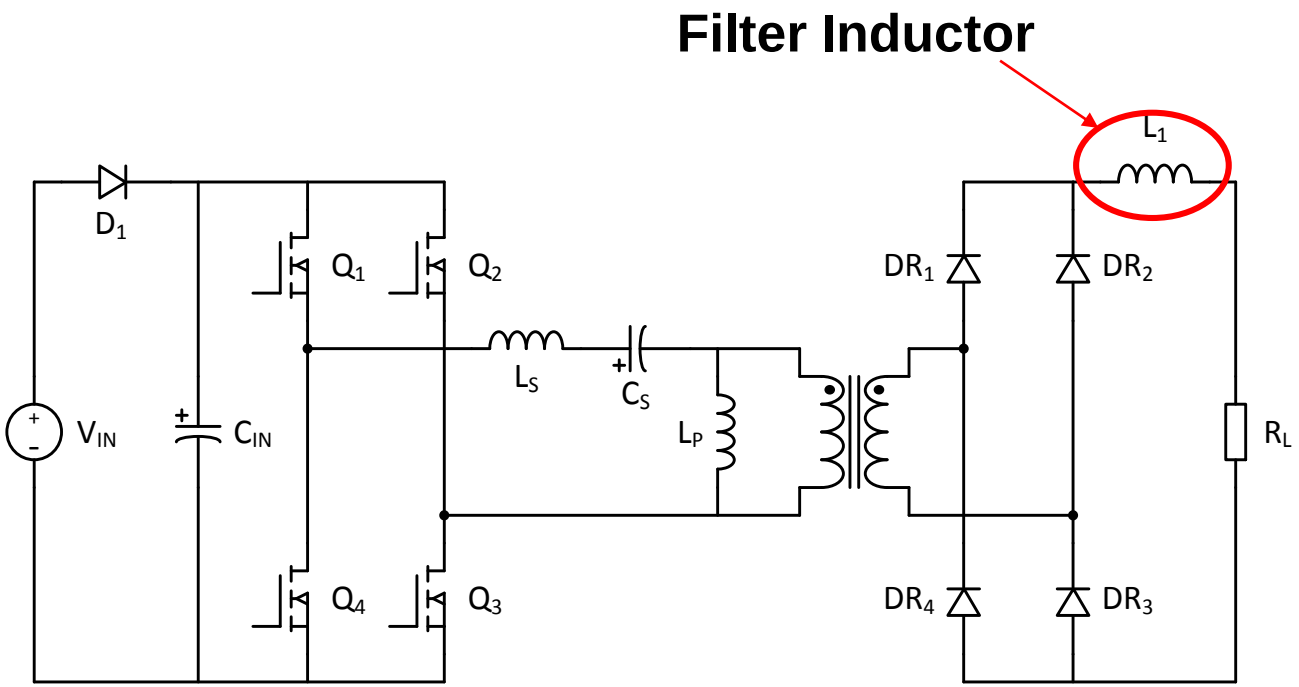

Fig 3: LLC Full Bridge Converter

Losses

- Loss in Magnetic components
  - Ohmic copper Loss
  - Winding loss due to AC & DC current
  - Core Loss – Hysteresis & Eddy current loss

  - Hysteresis loss $\propto f \cdot (B_m)^{\alpha}$
  - Eddy Current loss $\propto f^2 \cdot (B_m)^2$

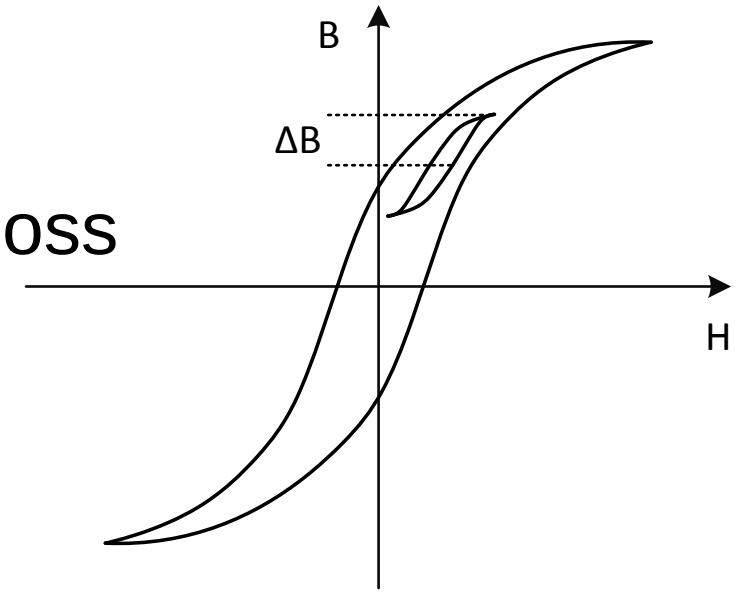

Fig 4: Typical B-H Curve of a magnetic material with Sine-wave excitation

Estimation of Losses

- Copper Ohmic loss: $\boldsymbol{I_{rms}^2 \cdot R_{DC}}$
- Winding Loss due to AC current – Skin effect, Proximity effect
  → Finite Element Analysis

- Hysteresis & Eddy Current Loss due to AC flux in the core
  – Steinmetz Equation(SE): $\boldsymbol{P_v = K_1 \cdot f^{\alpha} \cdot \Delta B^{\beta}}$
  – Modified Steinmetz Equation(MSE): $\boldsymbol{P_v = K_1 \cdot f_{eq}^{\alpha} \cdot \Delta B^{\beta} f}$
  – Separation of Eddy Current & Hysteresis loss
  – Core manufacturer models, etc.

Estimation of Losses

Empirical Data & Test Setup:-

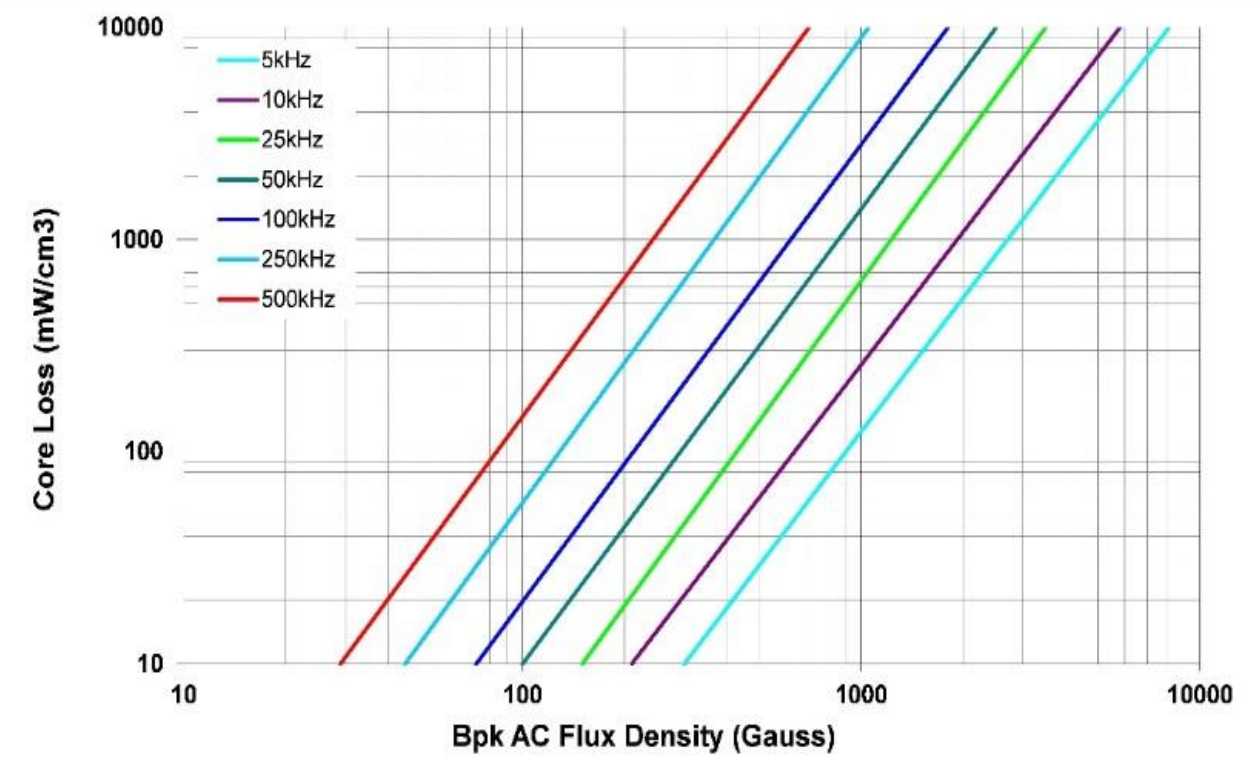

Figure 5: Typical Core Loss graph plotted against peak flux density at different frequencies

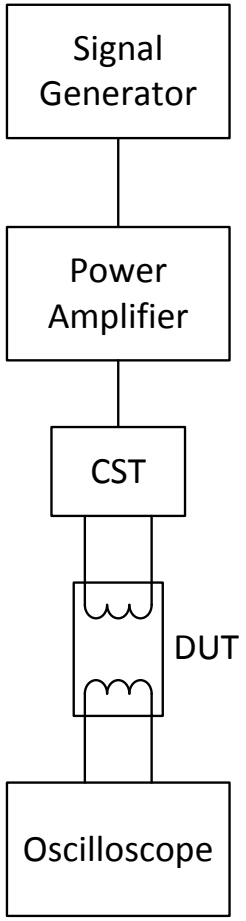

Figure 6: Classical Core loss measurement test set up

Disadvantages

- Low accuracy with Pulsating and triangular waveforms
- Mostly applicable for 50% duty cycle
- Limitations over frequency range
- Dependent on Core Manufacturer's empirical data
- Inaccuracy with Iron powder materials & Metal alloys
- Omission of AC losses in the winding
- No estimation of losses in the component which has more than one material
- Complexity of the set up to produce empirical data

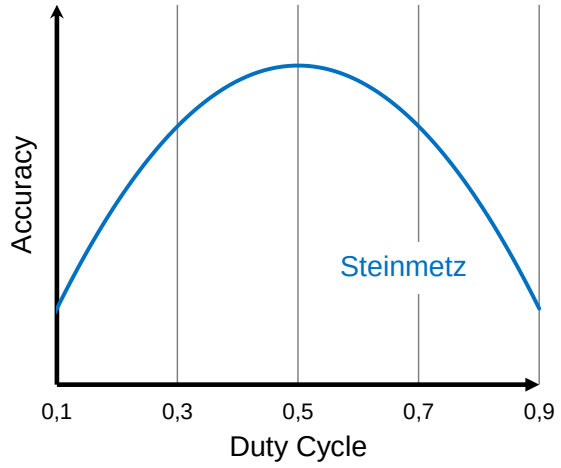

Würth Elektronik AC loss Model

- Description & Set up:

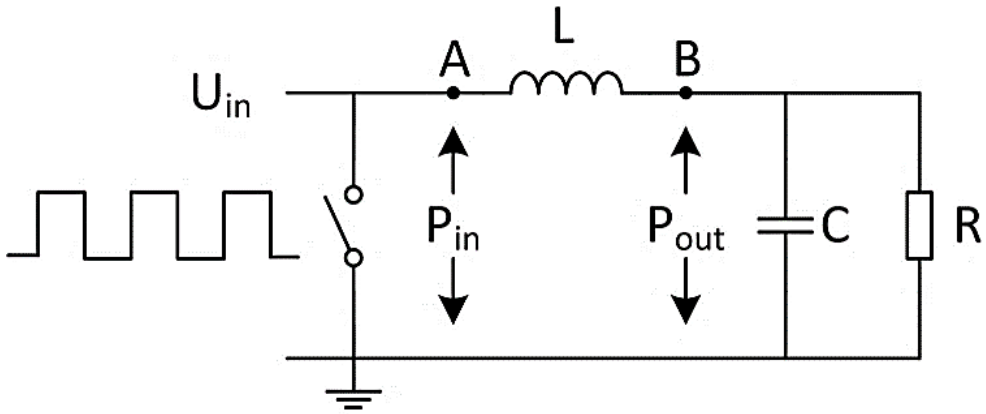

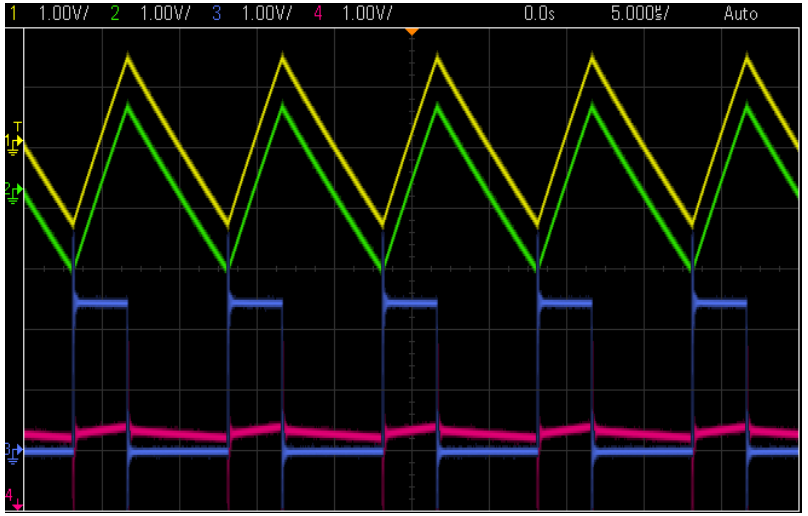

Fig 7 & 8 : Practical DC-DC converter set-up & resulting scope shots

- A pulsating input voltage is applied over the Inductor
- $(P_{in} - P_{out})$ is the power loss in the Inductor
- Divide losses of the Inductor in to AC & DC loss

Würth Elektronik AC loss Model

- DC Loss: Ohmic loss in copper
- AC Loss: Loss due to AC flux swing in the core & windings
- This process is repeated over wide range of parameters to produce our own empirical data

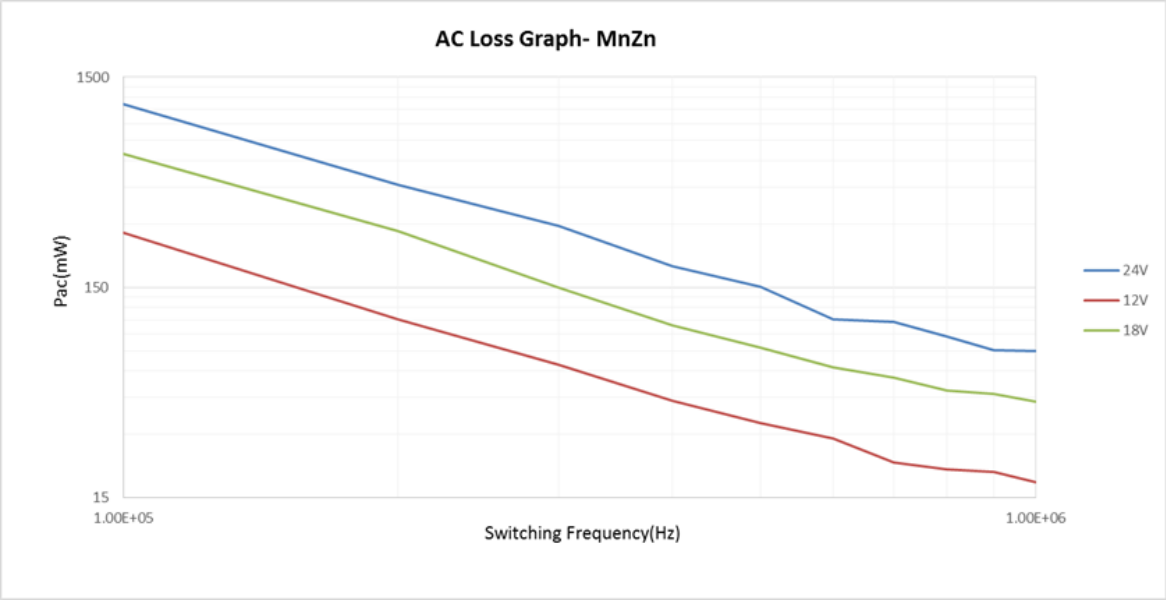

Fig 10: AC loss plotted against Switching frequency

- This empirical data is then used to plot a AC loss graph & create an equation to calculate AC loss as shown in figure 10

$$P_{AC} = f(V, Fsw, k1, k2, \dots)$$

Würth Elektronik AC loss Model

- Point of Operation Approach

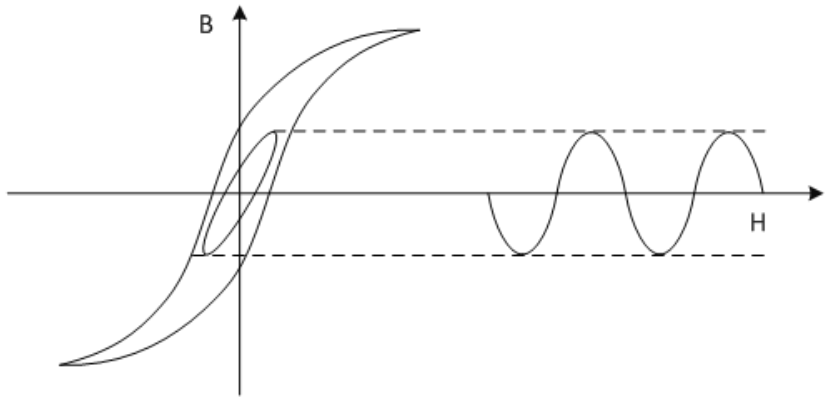

Fig 11:Typical approach for extracting core loss data

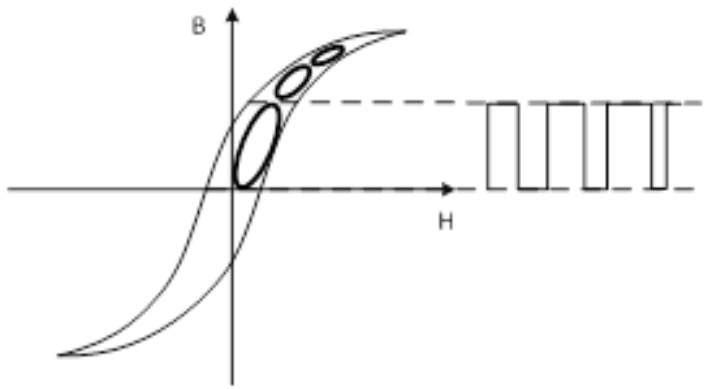

Fig 12: Würth Elektronik's Point of Operation approach

Experimental results

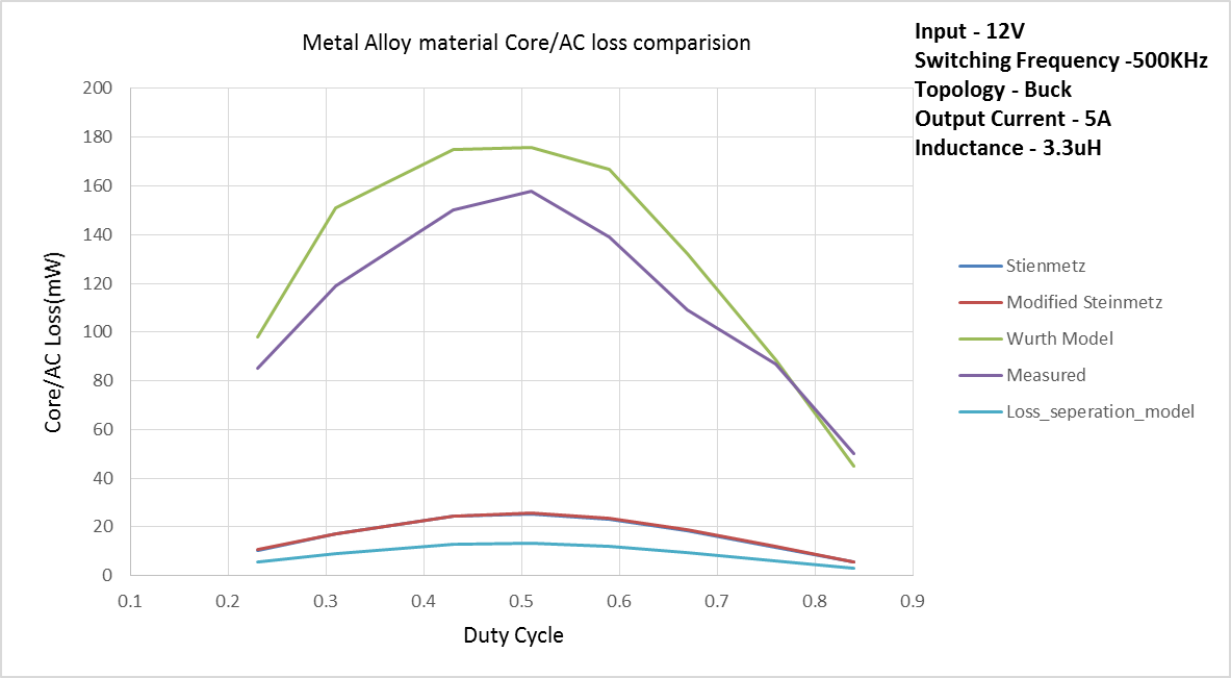

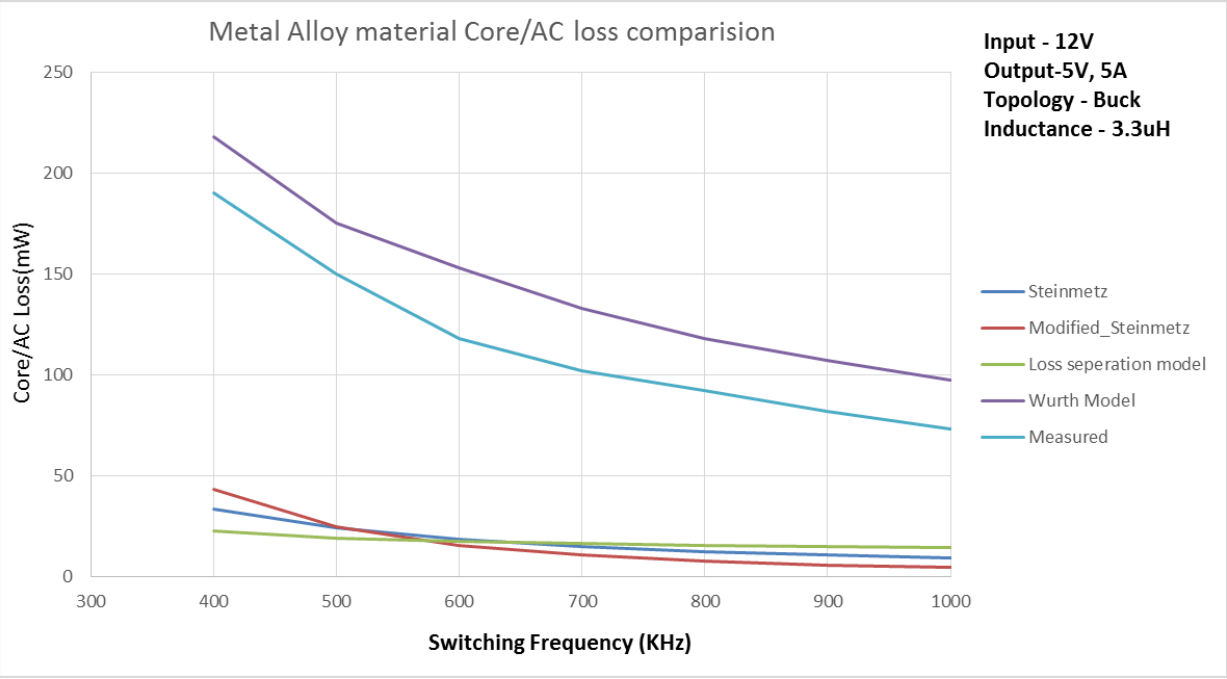

Experimental results

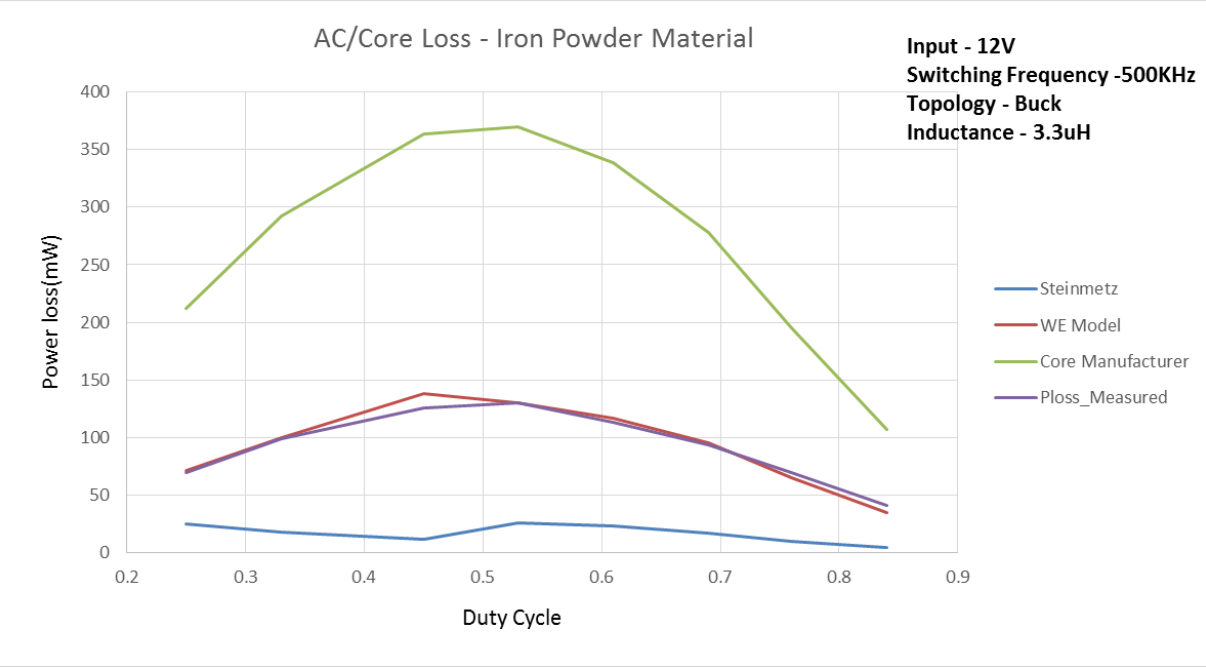

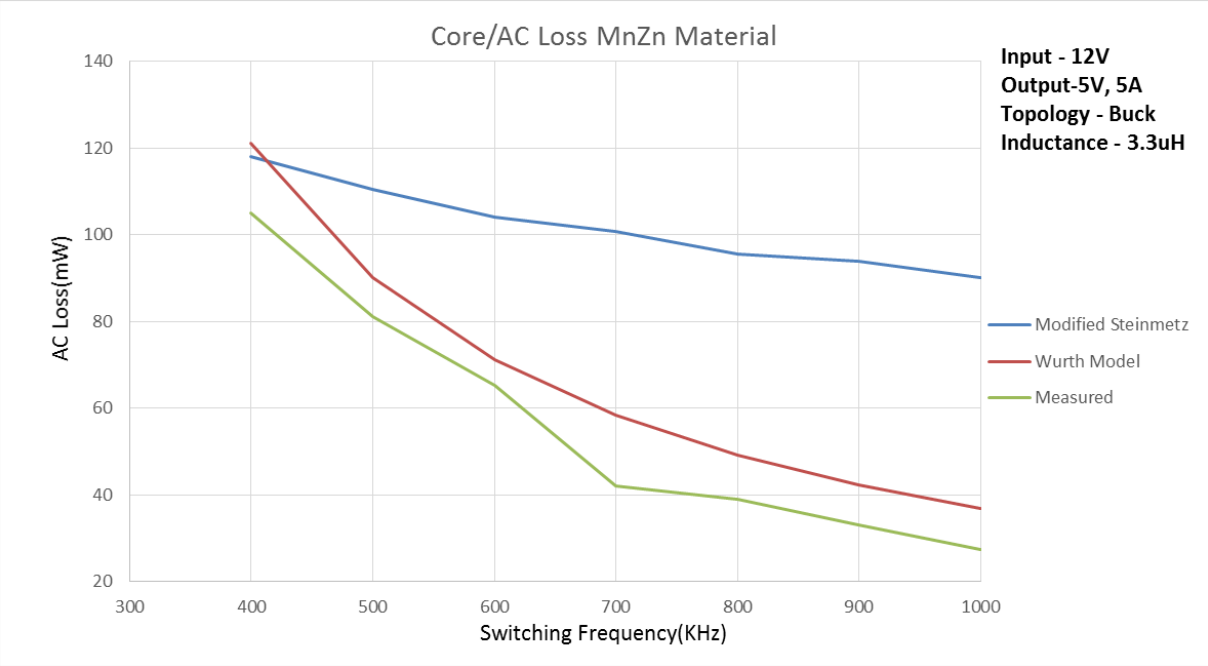

Advantages & Disadvantages

Würth AC Loss Model

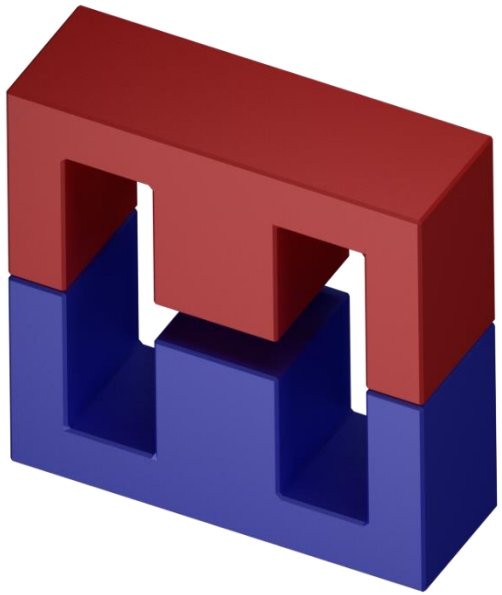

- **multiple materials** supported
- i.e. NiZn, MnZn, iron powder, metal alloy, etc.

Steinmetz Models

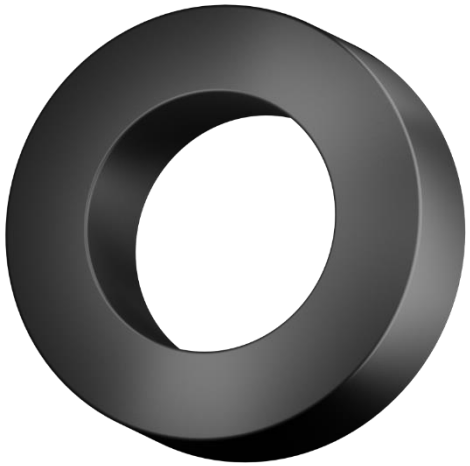

- only **single** material,
- mainly for NiZn, MnZn
  Not applicable for iron power & metal alloy

Advantages & Disadvantages

Würth AC Loss Model

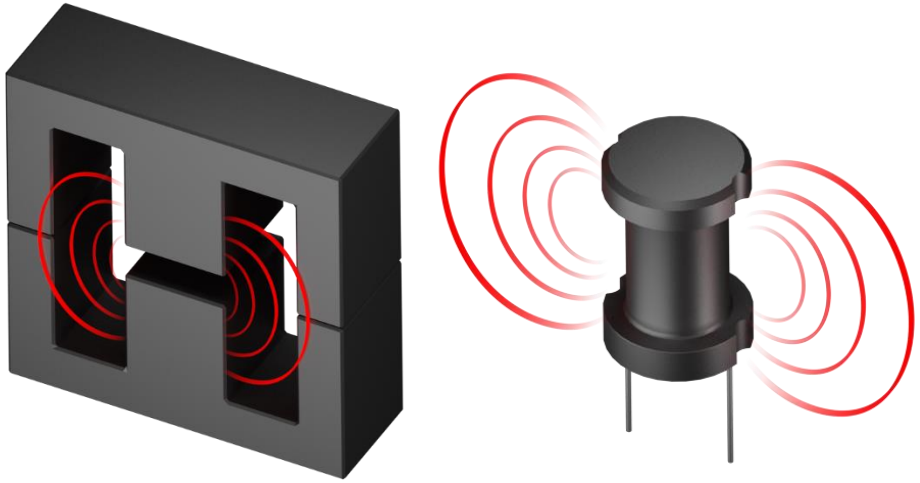

consideration of:

- real core shapes
- losses due to air gap (fringing effects)
- winding structure
- Considers even small change in core material and winding structure

Steinmetz Models

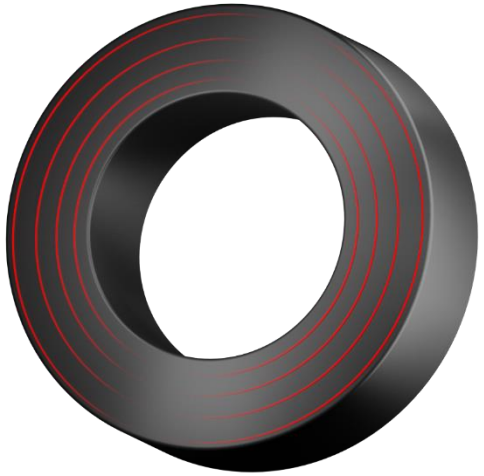

consideration of:

- ring cores only

Advantages & Disadvantages

Advantages:

- Accurate calculation of losses for any given Duty Cycle
- Accurate over wide range of frequency
- Estimation of temperature rise
- Includes AC winding losses
- Constantly improving and adding the new data based on the customer feedback

Disadvantages:

- Cannot separate Core loss & AC winding losses

Implementation in REDEXPERT

www.we-online.com/redexpert

WÜRTH ELEKTRONIK

Start | Würth Elektronik Group | Jochen | English | more than you expect

Power Inductors REDEXPERT®

Buck Converter

PARAMETERS EDIT

Input	Output	Switch	Inductor	Diode
12.0 V 10.0-15.0 V	5.00 V 1.00 A	800 kHz	40 % Single	0.30 V

DETAILS

I_{rms}	I_{max}	L_{opt}
≥ 1.00 A	≥ 1.20 A	9.43 µH

WE-MAPI - 74438336068

t_{on}	DC	ΔI_L	I_{peak}
539 ns	0.43	555 mA	1.28 A

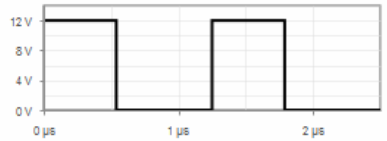

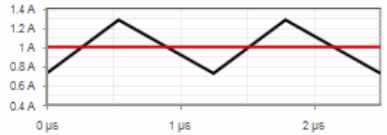

AC Losses	DC Losses	Total Losses	Temp.Rise
40.7 mW	168 mW	209 mW	22.0 K

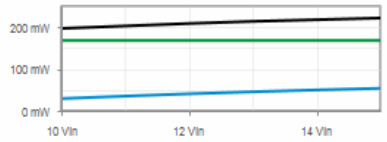

Filters: Type = Single | I_R ≥ 1.00 A | I_{sat} ≥ 1.20 A | 6.60 µH ≤ L ≤ 12.3 µH

100 / 252 items

Order Code	Series	Size	Inte	Spec	R_1	R_2	Type	L	$R_{DC,typ}$	I_R	I_{sat}	AC Losses	DC Losses	Total Losses	Temp.Rise	Length	Width
74438335068	WE-MAPI	3015		PDF	M...	71...	Single	6.80 µH	250 mΩ	1.10 A	2.40 A	47.5 mW	250 mW	297 mW	39.4 K	3.0 mm	
74438336068	WE-MAPI	3020		PDF	M...	71...	Single	6.80 µH	168 mΩ	1.60 A	2.85 A	40.7 mW	168 mW	209 mW	22.0 K	3.0 mm	
74438336100	WE-MAPI	3020		PDF	M...	71...	Single	10.0 µH	280 mΩ	1.20 A	2.35 A	27.7 mW	280 mW	308 mW	32.0 K	3.0 mm	
744025006	WE-TPC	2828		PDF	M...		Single	6.80 µH	142 mΩ	1.10 A	1.30 A	53.9 mW	142 mW	196 mW	44.6 K	2.8 mm	

74438335068	74438336068	74438336100
WE-MAPI · 3015	WE-MAPI · 3020	WE-MAPI · 3020
6.80 µH · 250 mΩ	6.80 µH · 168 mΩ	10.0 µH · 280 mΩ
1.10 A · 2.40 A	1.60 A · 2.85 A	1.20 A · 2.35 A

Drop Order Codes in the bar to add

Drag out buttons to delete them

Free Samples

Tidy Up

Inductance / Current

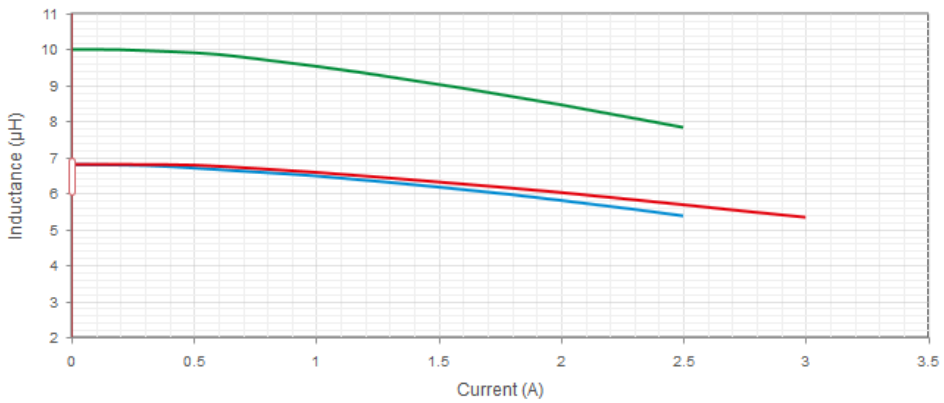

Temperature Rise / Current

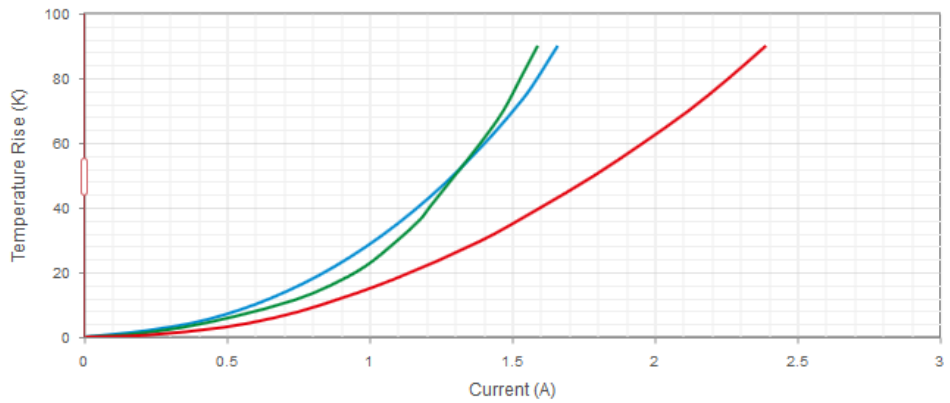

Future Work & Conclusion

- Model for Coupled Inductors
- Estimating loss of Inductors in Inverters (Averaged Sine wave)
- Verify the performance in DCM mode

Conclusion:

Application based extraction of empirical is way forward to estimate losses for efficient design(s).

Questions

WÜRTH ELEKTRONIK

????

www.we-online.com/redexpert