Rompower

Tucson Arizona

GaN Technology as an enabler for Higher Efficiency Magnetics

Ionel Dan Jitaru

Rompower Energy Systems Inc.

6262 N. Swan Rd, Suite 200

Tucson, Arizona 85718

OUTLINE

- New Trends in Power Conversion Technology influences the Magnetics
- New Soft Switching Technology
- Trends in Magnetics
- GaN technology a tool in increasing the Magnetic Efficiency
- Conclusion

TRADITIONAL SOFT SWITCHING TOPOLOGY

Full Bridge Phase Shifted (Old Technology)

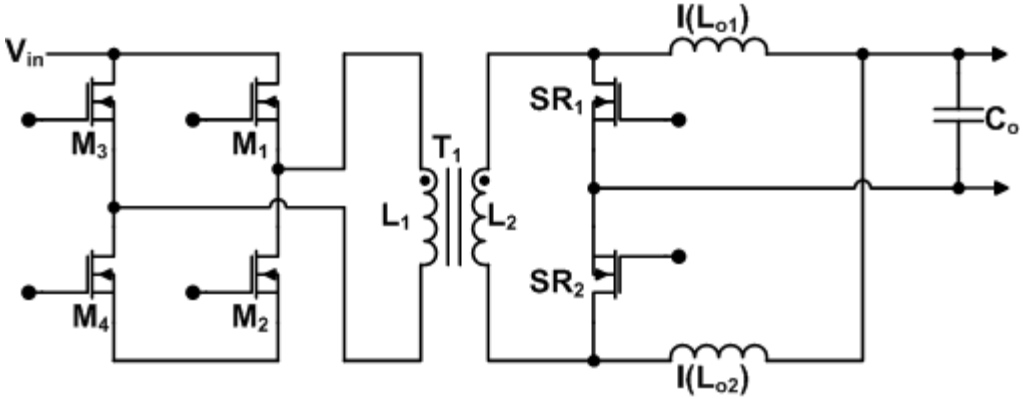

Full Bridge Phase Shifted with Current Doubler

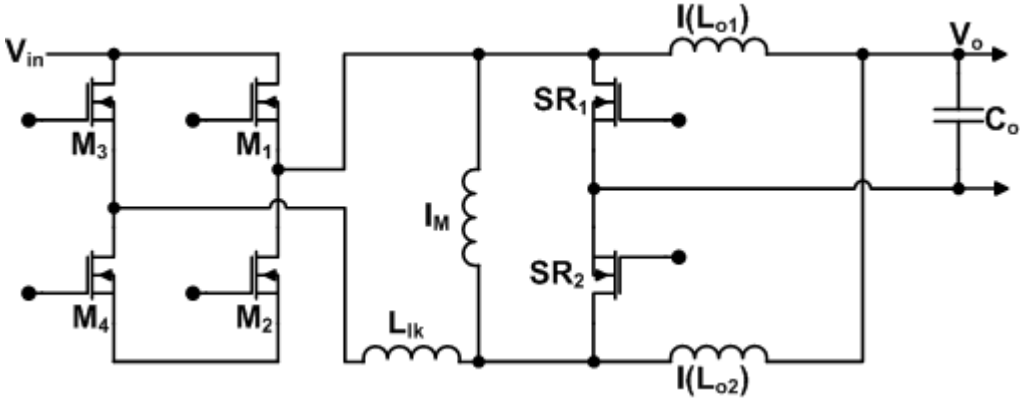

Equivalent Circuit of the Full Bridge Phase Shifted with Current Doubler

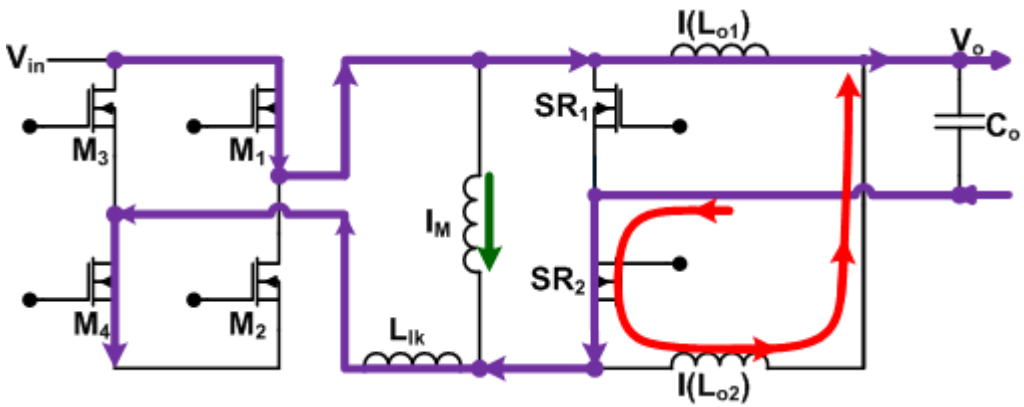
Vin
M3
M1
M4
M2
IM
LIk
SR1
SR2
I(Lo1)
I(Lo2)
Vo
Co

t0-t1

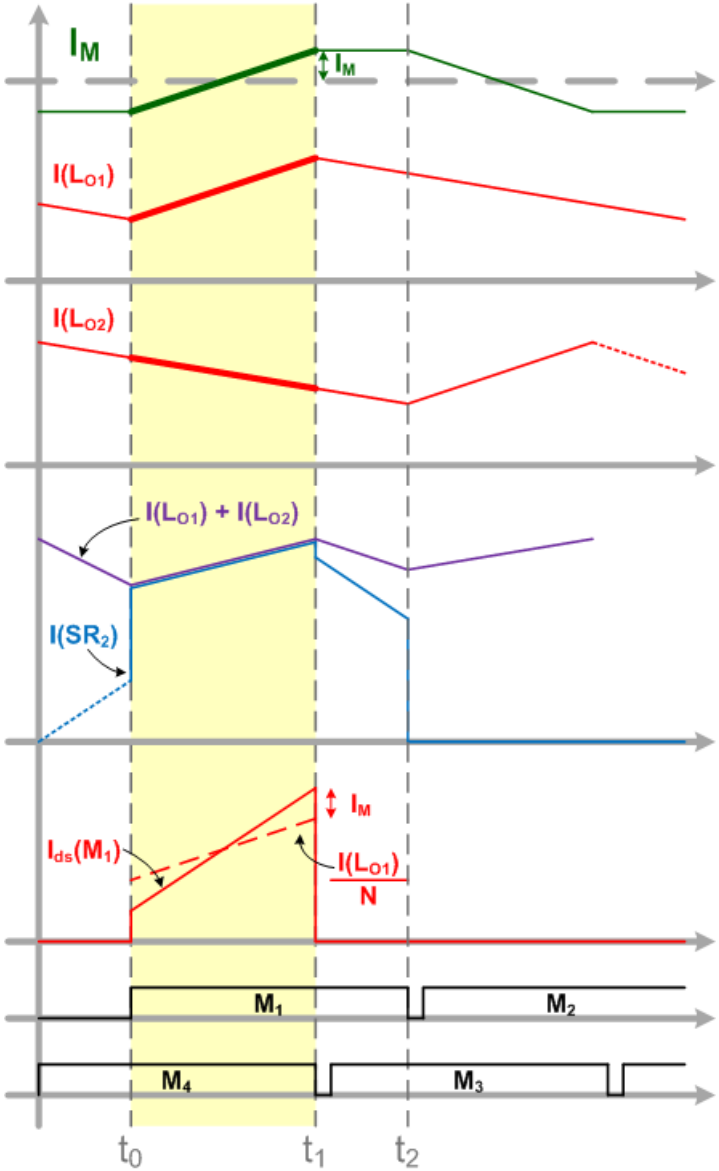
IM
IM
I(LO1)
I(LO2)
I(LO1) + I(LO2)
I(SR2)
IM
Ids(M1)
I(LO1)
N
M1
M2
M4
M3
t0
t1
t2

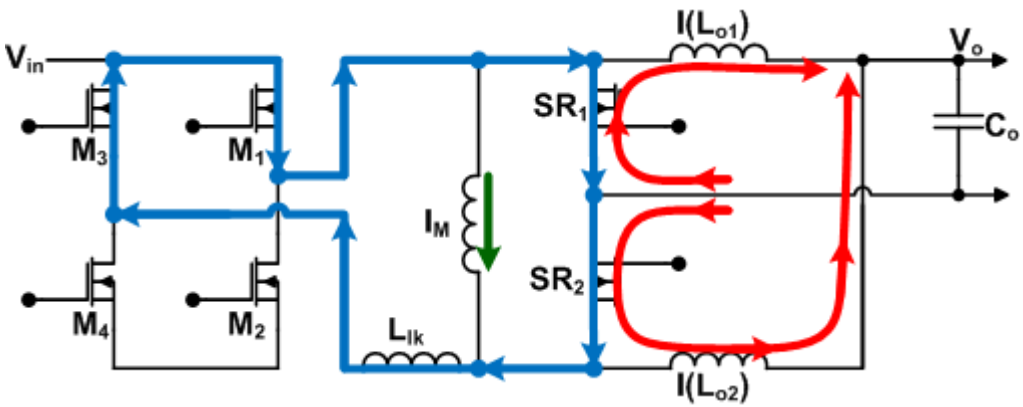
Vin
M3
M1
M4
M2
IM
Llk
SR1
SR2
I(Lo1)
I(Lo2)
Vo
Co

t1-t2

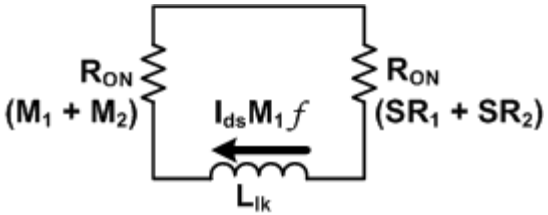
RON
(M1 + M2)
Ids M1 f
RON
(SR1 + SR2)
Llk

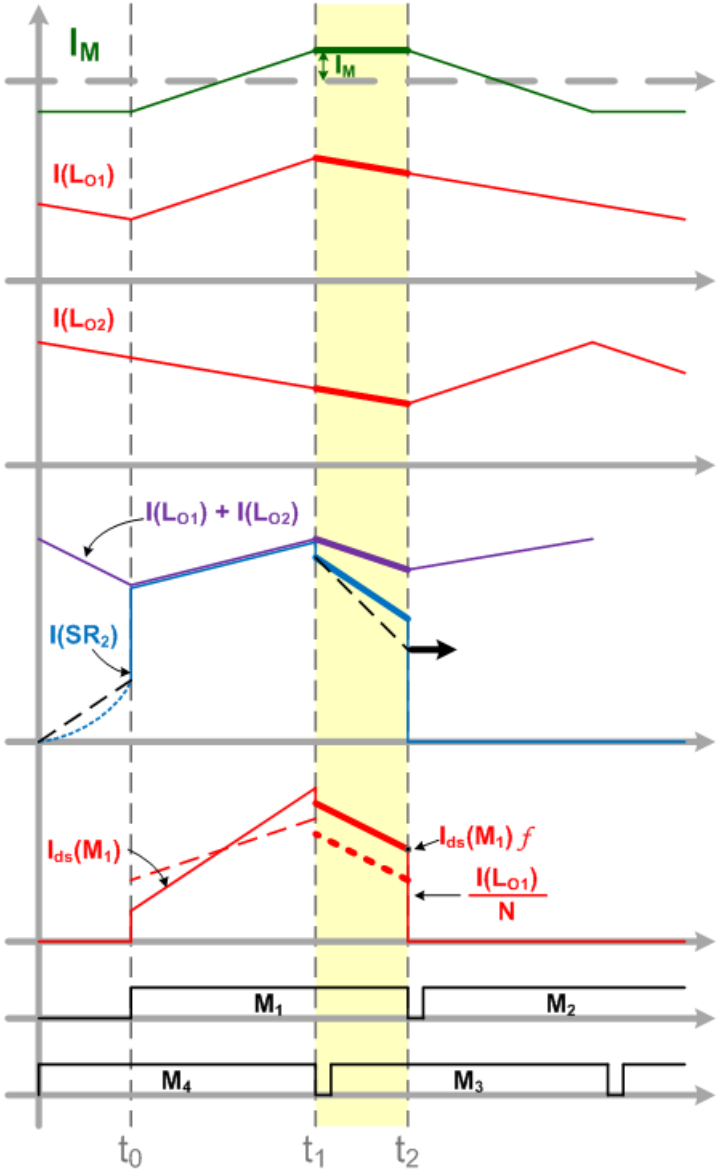
IM
IM
I(LO1)
I(LO2)
I(LO1) + I(LO2)
I(SR2)
Ids(M1)
Ids(M1) f
I(LO1)
N
M1
M2
M4
M3
t0
t1
t2

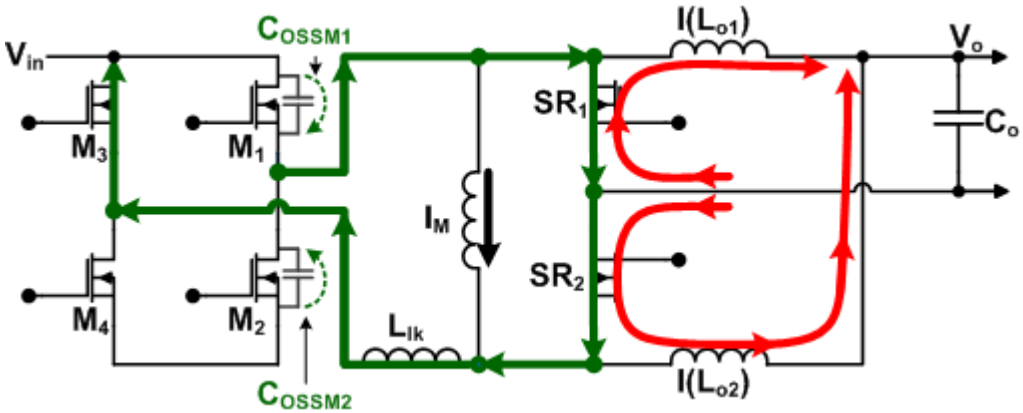

$$\Delta V_{rez} < V_{in}$$

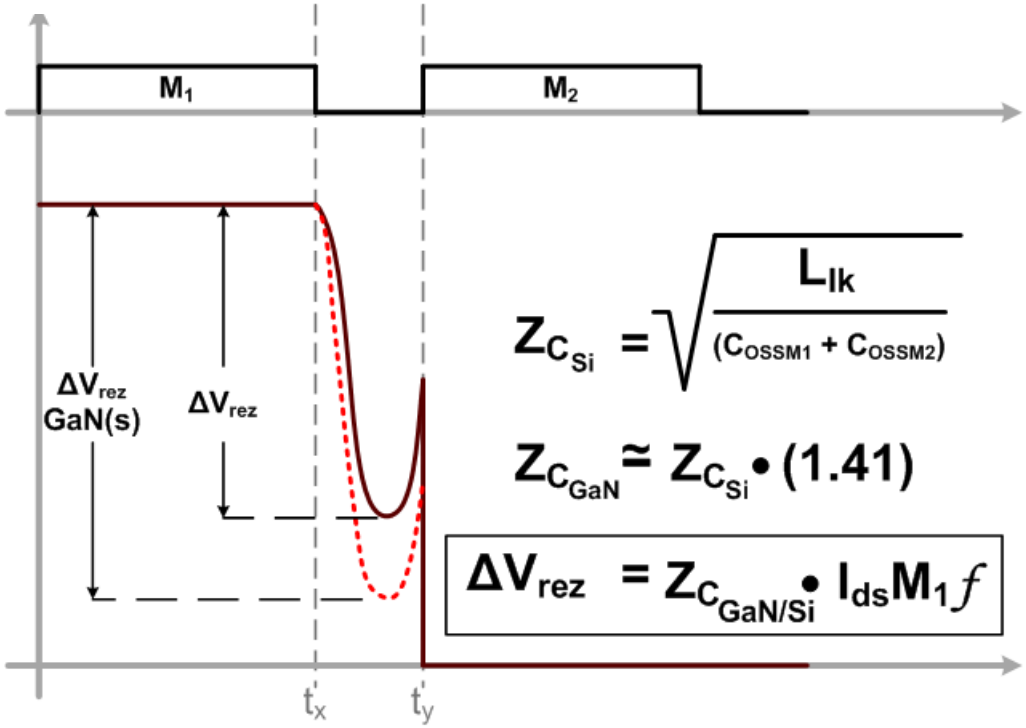

Resonant Transition

$$Z_{C_{Si}} = \sqrt{\frac{L_{lk}}{(C_{OSSM1} + C_{OSSM2})}}$$

$$Z_{C_{GaN}} \simeq Z_{C_{Si}} \bullet (1.41)$$

$$\Delta V_{rez} = Z_{C_{GaN/Si}} \bullet I_{ds} M_1 f$$

GaNs have the advantage of a smaller Coss

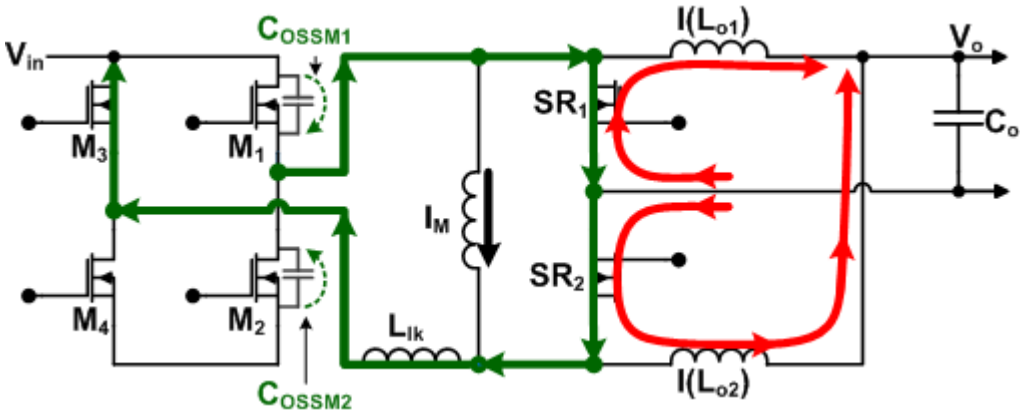

$$\Delta V_{rez} > V_{in}$$

Larger Leakage Inductance can lead to ZVS

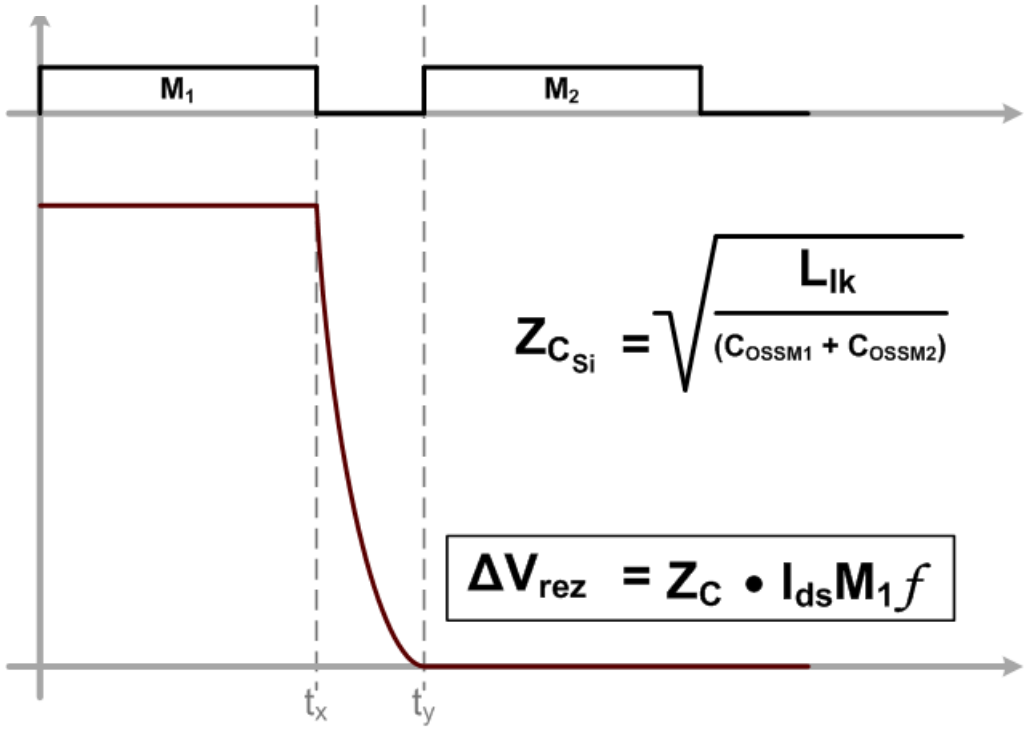

$$Z_{C_{Si}} = \sqrt{\frac{L_{lk}}{(C_{OSSM1} + C_{OSSM2})}}$$

$$\Delta V_{rez} = Z_C \bullet I_{ds}M_1 f$$

Traditionally ZVS topologies required a larger leakage inductance in the transformer

- In ZVS full bridge phase shifted topology the leakage inductance was used as an energy storage element for discharging the parasitic capacitances of the primary switchers.

- In other topologies such as single ended forward with active clamp the leakage inductance was used to delay the magnetizing current flow into the secondary until the soft transition was finalized.

- In some applications additional inductive elements are placed in series with the primary winding to add to the leakage inductance.

New Technology in Soft Switching

“True” soft switching

"TRUE" SOFT SWITCHING TECHNOLOGIES

- Current Shaping is a methodology wherein the current is "shaped" in a such way that it reaches zero before the switch is turned off.
- By "shaping" the current in a switching device we prevent the conduction of the switch when reverse voltage is applied.

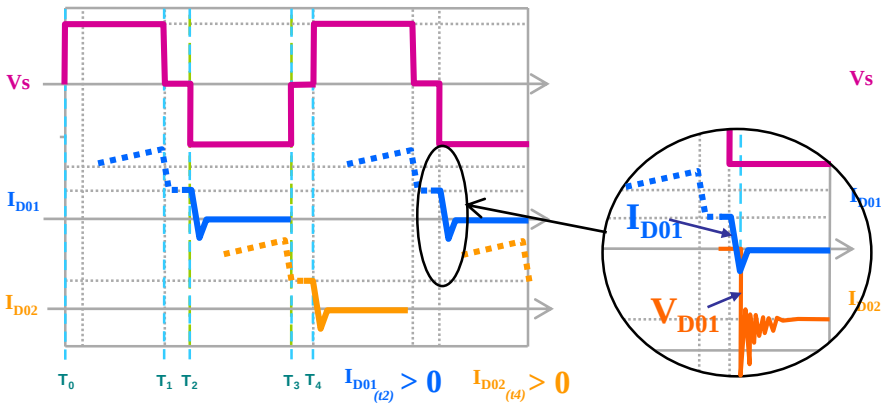

Before Current Shaping

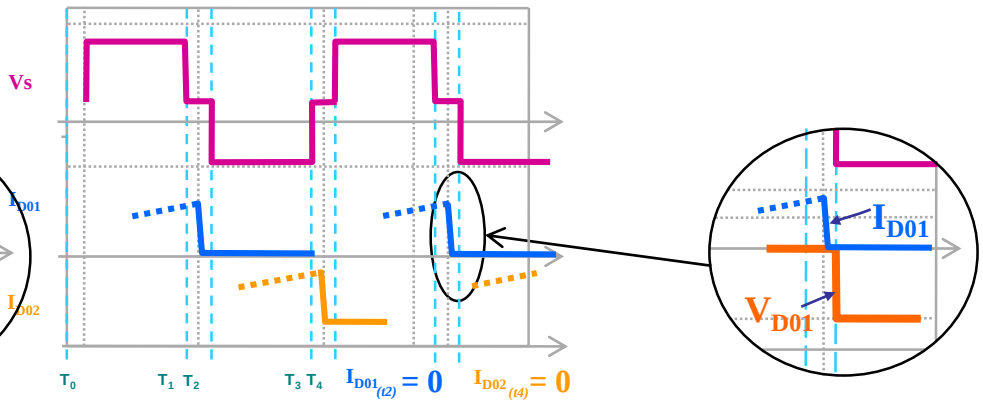

After Current Shaping

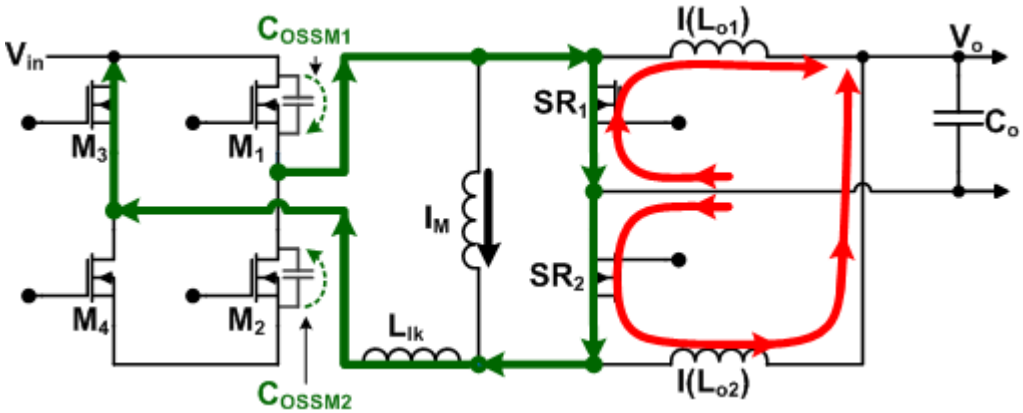

$\Delta V_{rez} < V_{in}$

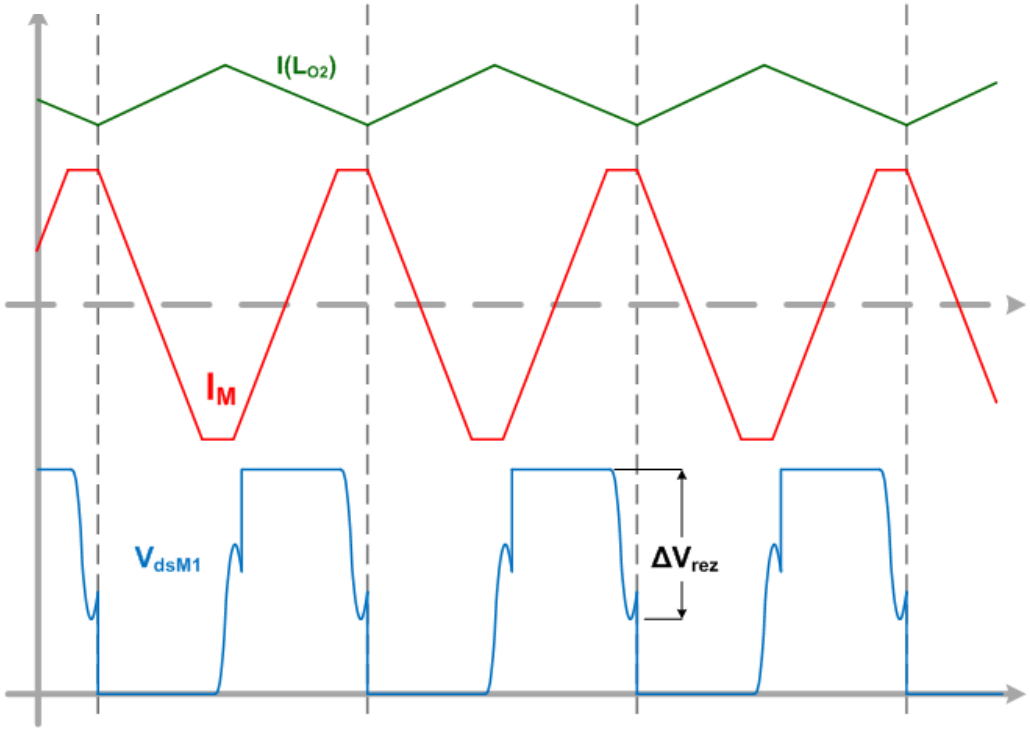

For small Leakage Inductance Transformers we do not reach ZVS over the entire load range.

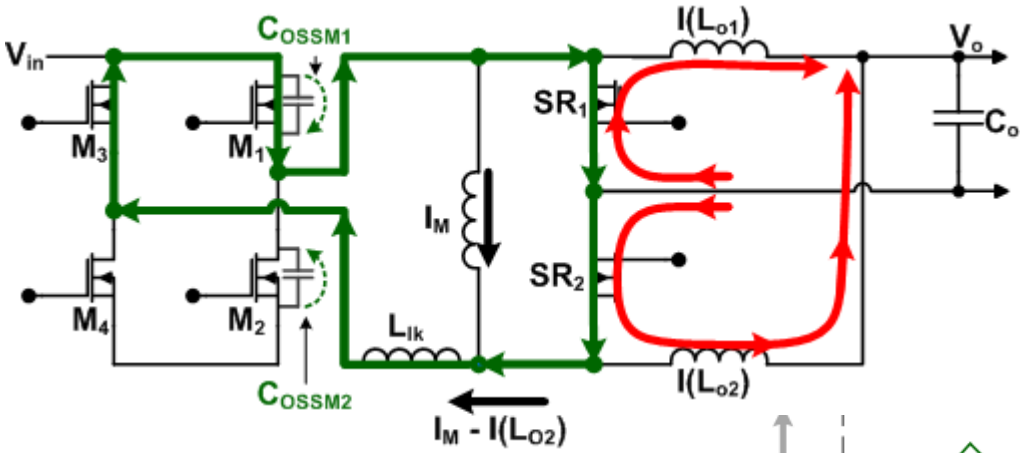

$I_M > I(L_{O2})$ Between (tx → ty)

$$\int_{tx}^{ty} (I_M - I_{LO2})\, dt > (Q_{COSSM1_{tx}} + Q_{COSSM2_{tx}})$$

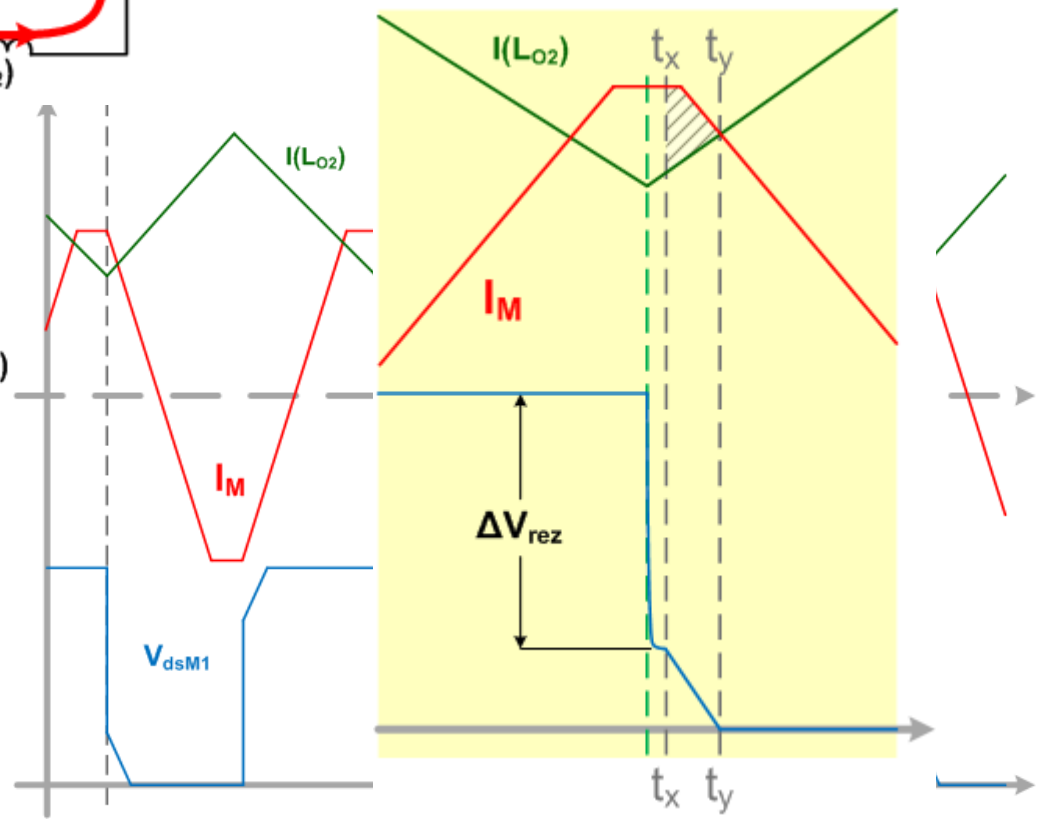

This ZVS technique can be employed at any load if we increase IM

[1] [4]

ZVS At any Line and Load Conditions

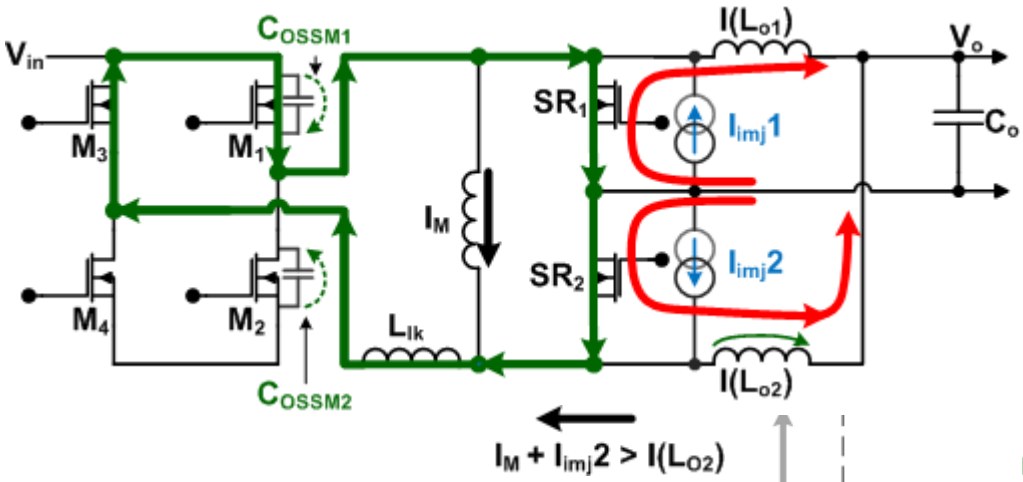

$$\int_{tx}^{ty} (I_M + I_{imj} - I_{LO2})\, dt > (Q_{COSSM1_{tx}} + Q_{COSSM2_{tx}})$$

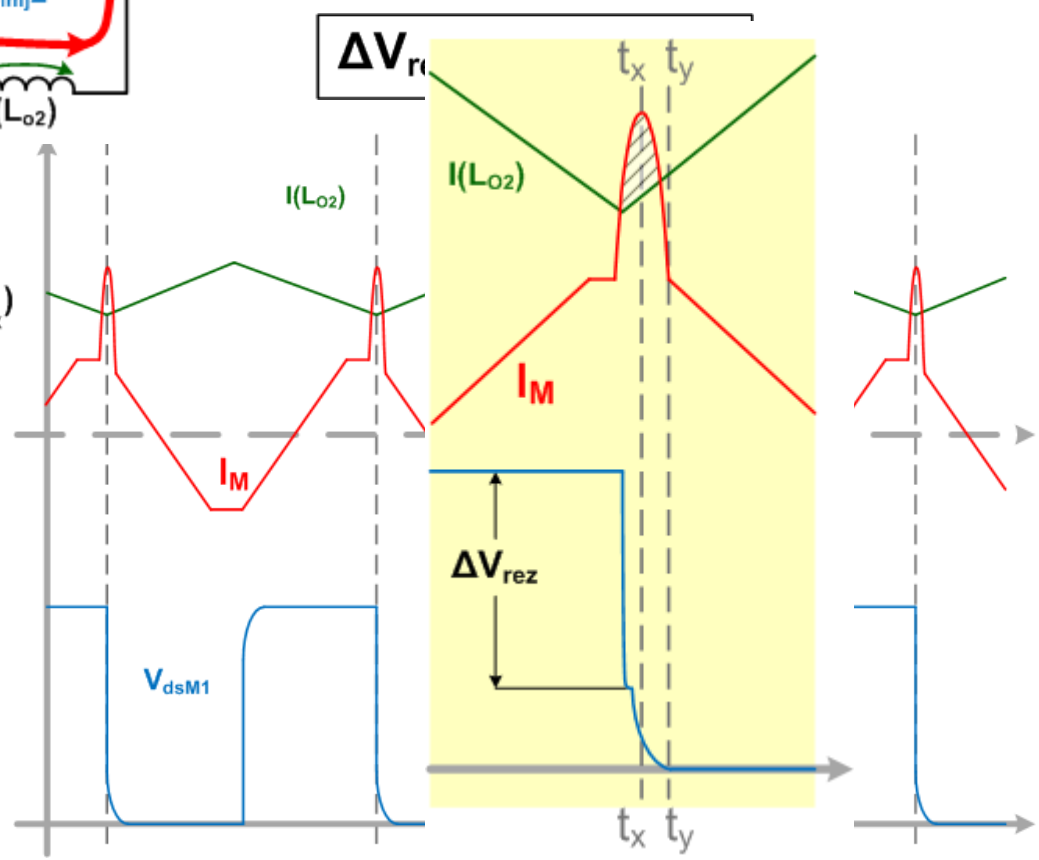

Current Injection technology can ensure ZVS at any operating conditions and even at zero leakage Inductance

[2] [4]

Magnetics for the New ZVS Technology

- A Larger Leakage inductance will reduce the effective duty cycle and create ringing and spikes across the SRs in the old technology.

- The New Technology does not require a large leakage inductance and it will operate even with zero leakage inductance.

- In the New Technology there are no spikes or ringing across any of the switching elements.

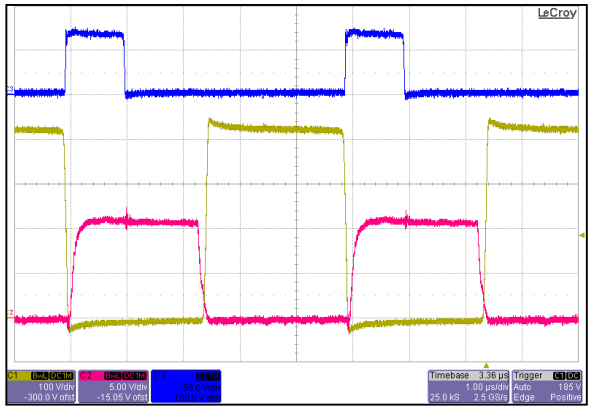

Figure 3: Vin=405V, Iout=120A, Vout=14V
Blue is Syncro Drain, Red is Primary Gate, Yellow is Primary Drain

Efficiency plot & Power Budget @ 100% Load

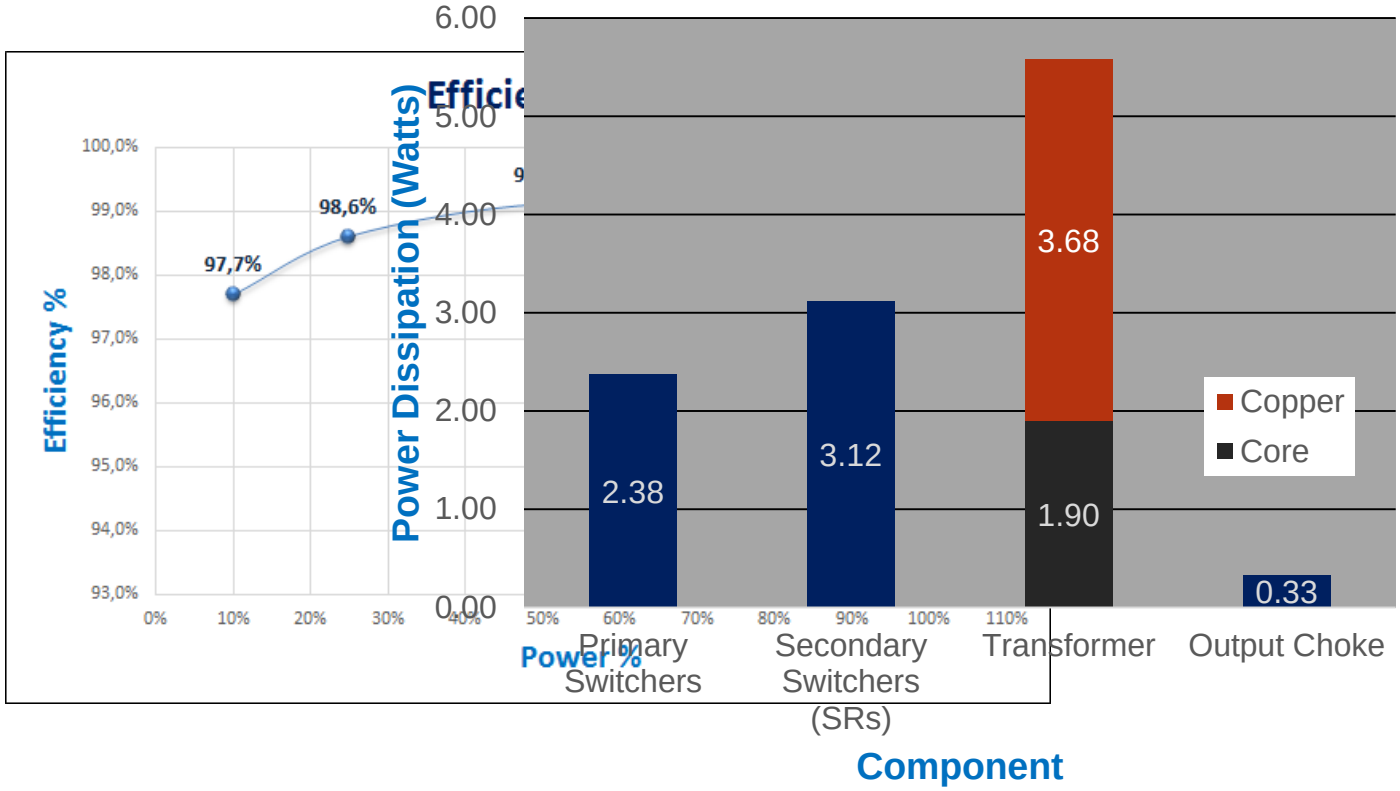

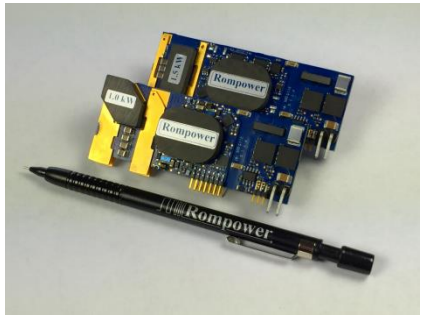

Magnetics For the New Soft Switching Technology

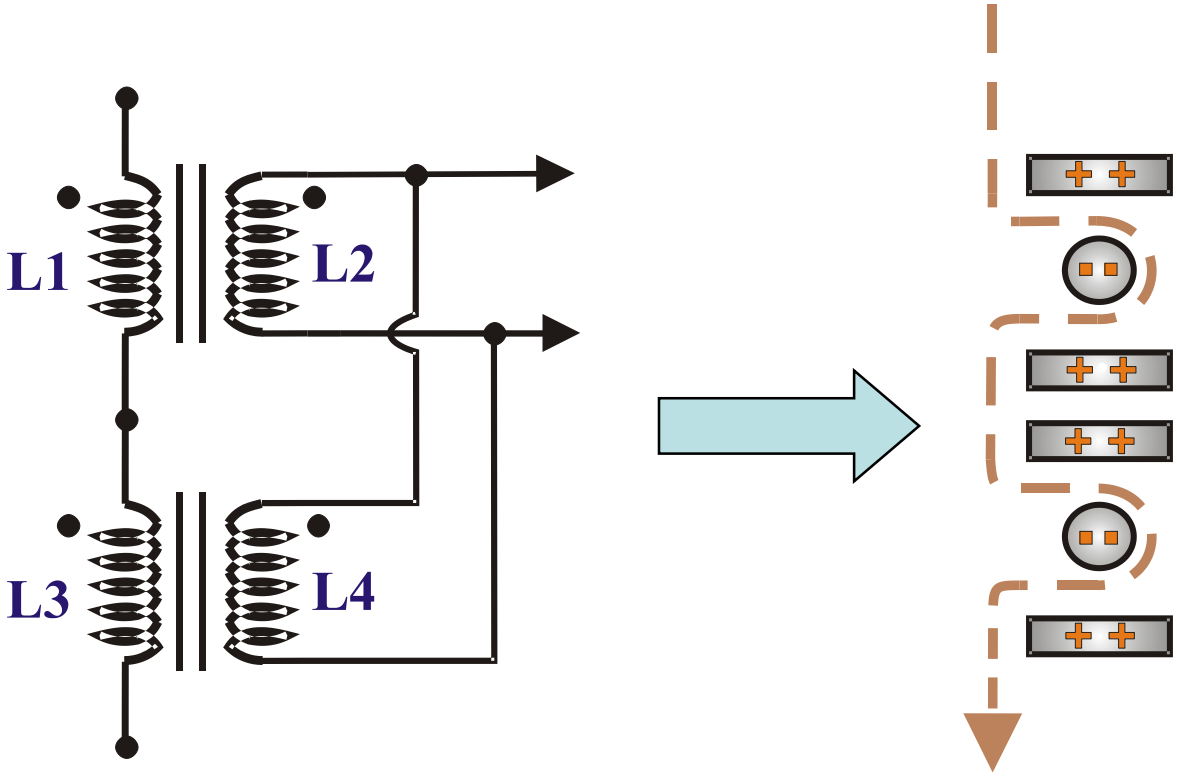
L1
L2
L3
L4

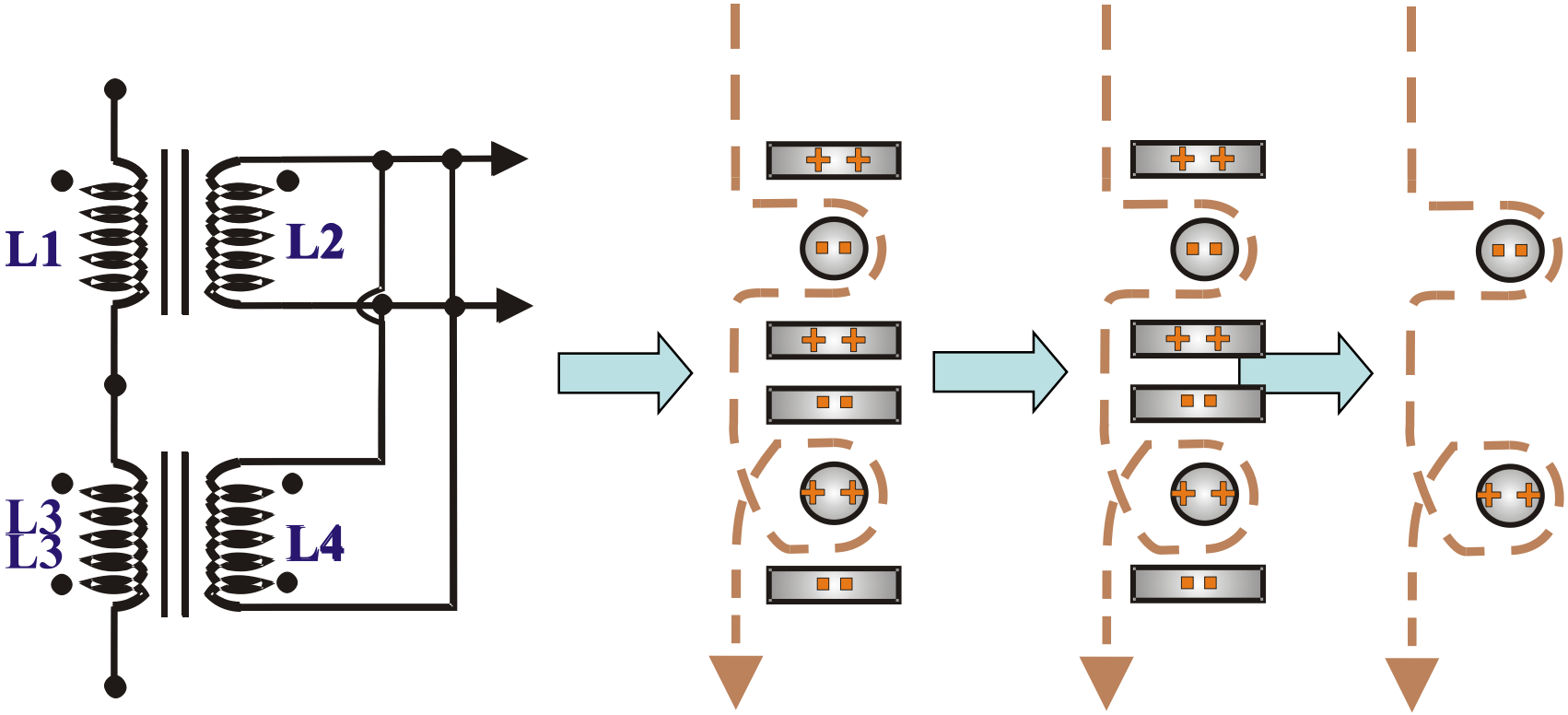
L1
L2
L3
L3
L4

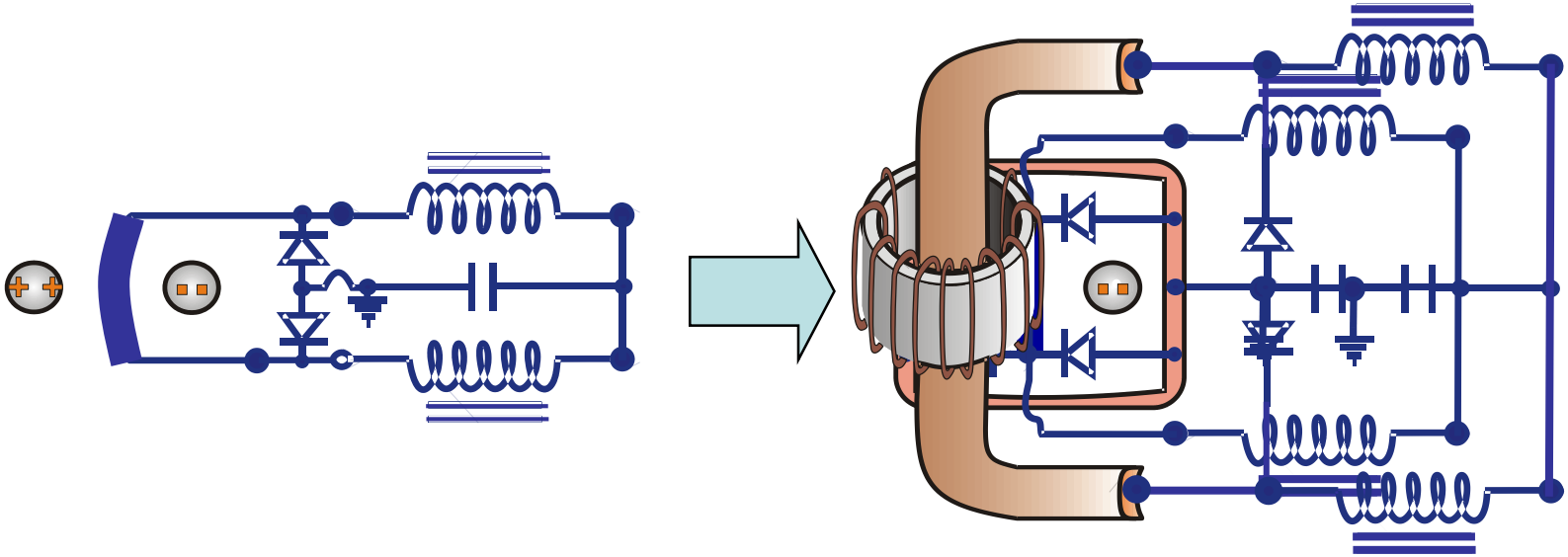

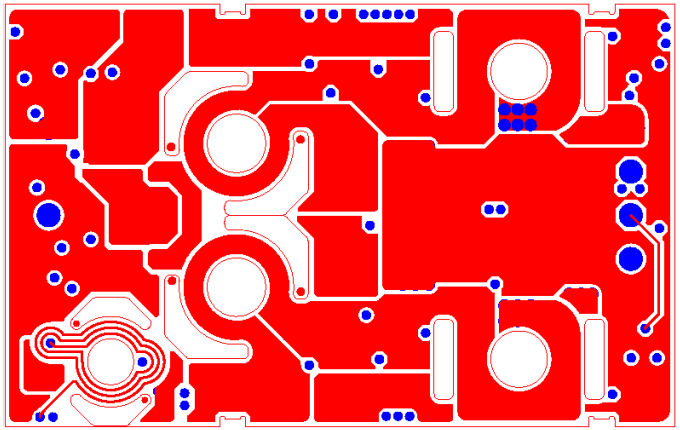

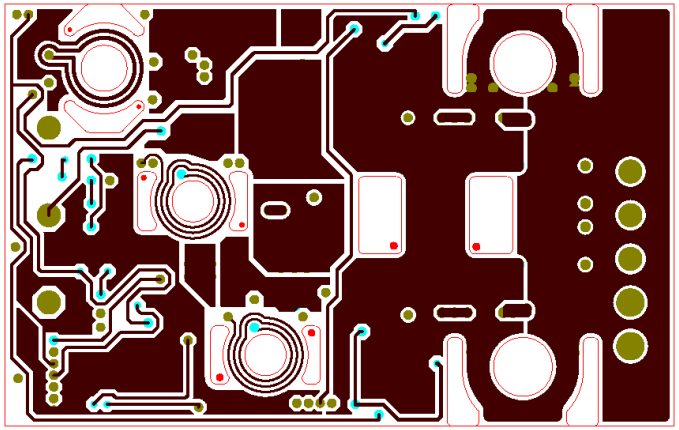

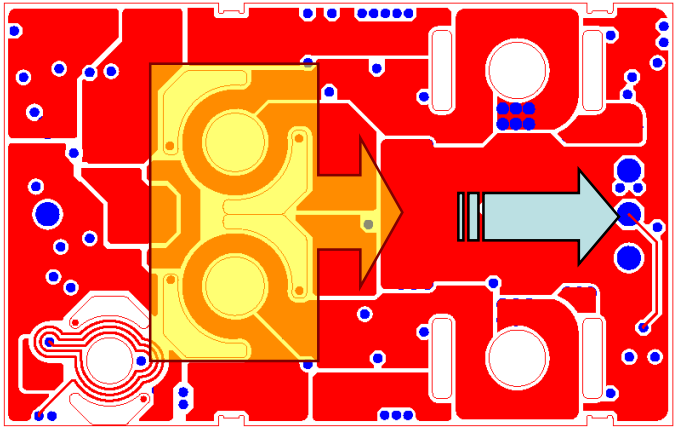

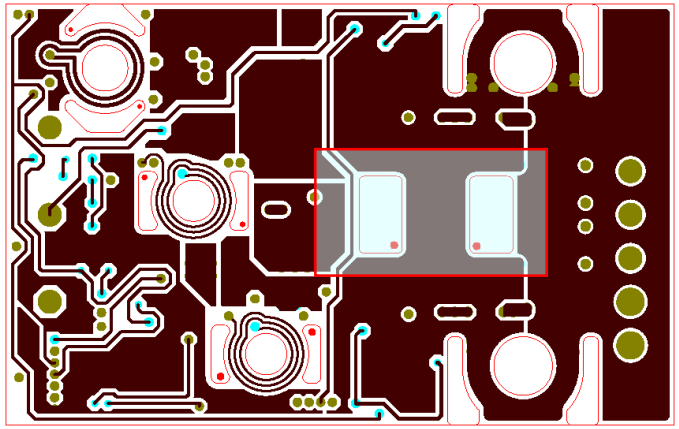

Winding Termination Effects

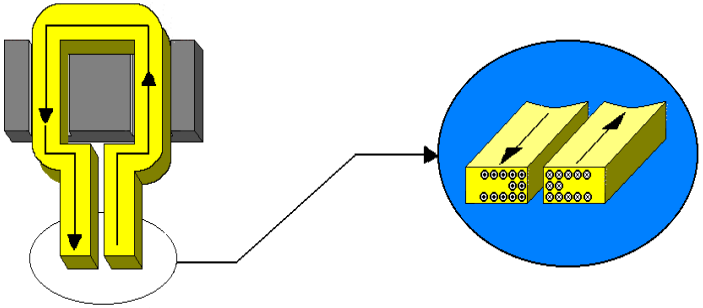

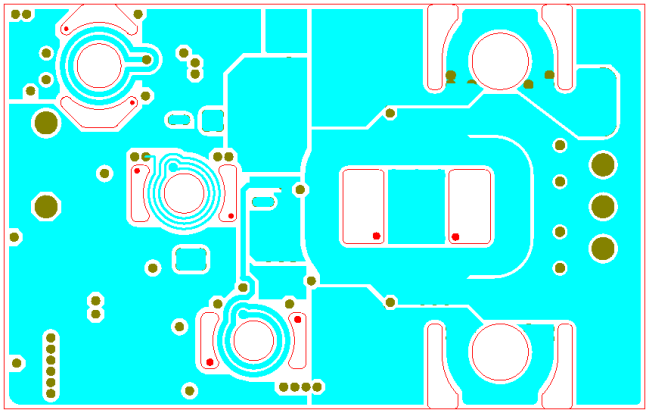

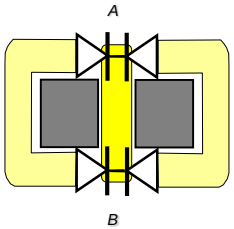

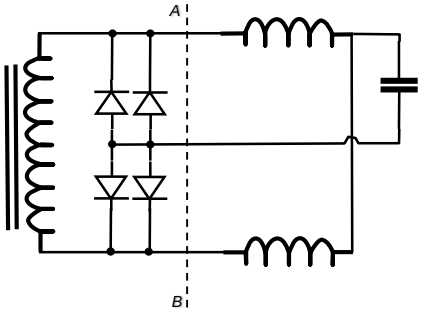

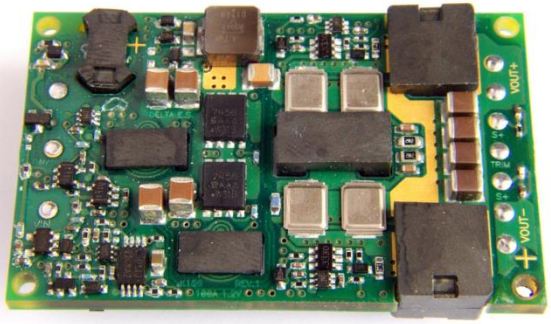

GaNs versus Silicon

- Lower drain to source capacitance than Silicon.
- Less energy required for Soft Transition by comparison with equivalent silicon devices.
- Higher efficiency due to the reduction of the circulating current for Soft Transition.
- Lower Ron without the penalty of a large output capacitance
- Smaller size for the same Ron

POTENTIAL BENEFITS OF HIGHER FREQUENCY

1KW , Vo=12V @ 83A

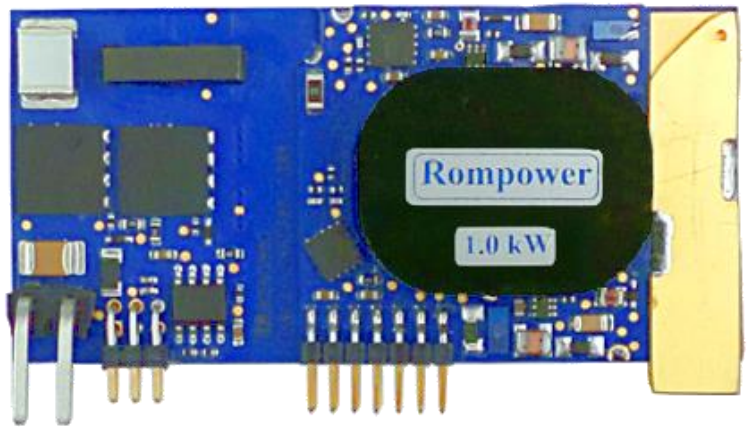

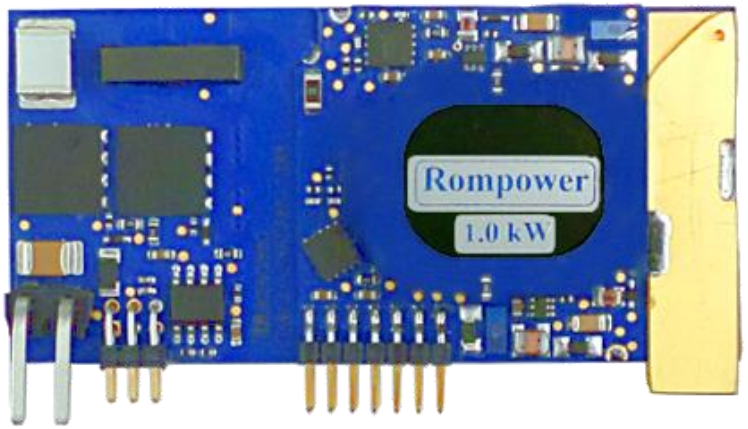

We decreased the size of the core cross section by 30% and increase the frequency to have the same core loss.

What would be the impact on the transformer efficiency and the efficiency of the converter ?

POTENTIAL BENEFITS OF HIGHER FREQUENCY

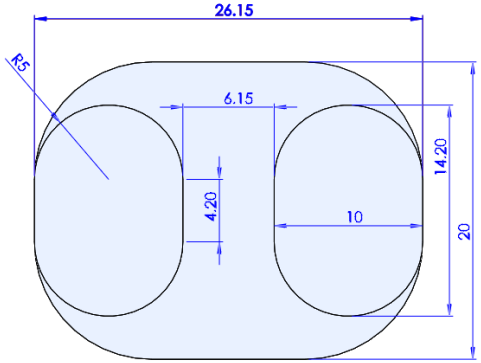

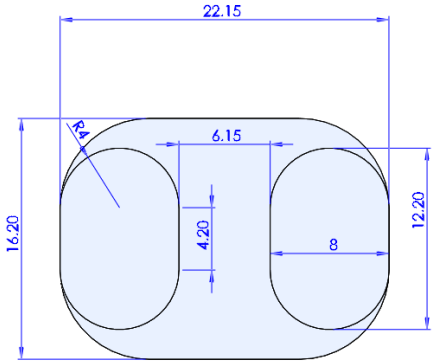

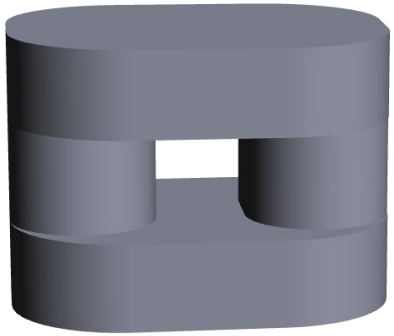

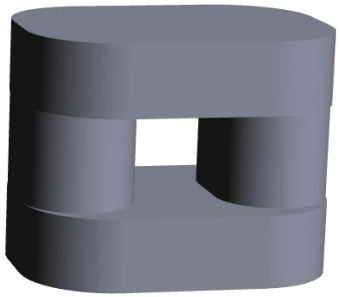

Ae=1.2cm^2 , Ve=6cm^3
*Np=24 Rdc primary=**115mOhm***
*Ns=1:1 Rdc secondary=**.6 mOhm***

Switching Frequency =250Khz

Core loss =1.9W

*Ae=**0.85cm**^{2} , Ve=**4cm**^{3}*
*Np=24 Rdc primary=**105mOhm***
*Ns=1:1 Rdc secondary=**.31 mOhm***

Switching Frequency =350Khz

Core loss= 1.94W

1KW , Vo=12V @ 83A

POTENTIAL BENEFITS OF HIGHER FREQUENCY

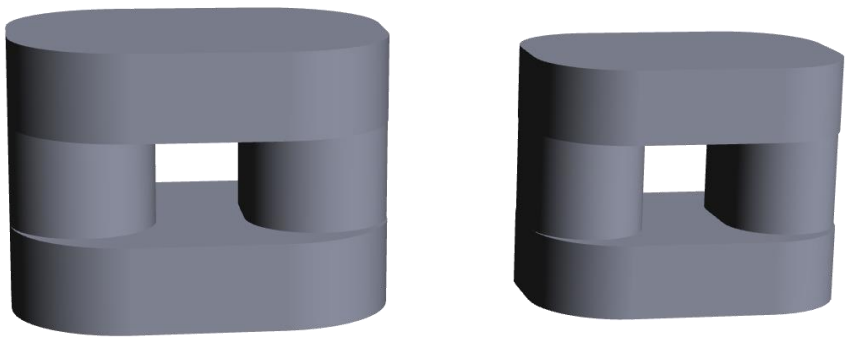

26% Reduction in power dissipation in transformer

10% Reduction in power dissipation in Converter

Switching Frequency=250Khz

Core loss =1.9W

*Pd primary winding =**0.795W***
*Pd Secondary winding =**2.88 W***
*Total Transformer Loss = **5.57W***

η transformer=99.44%

Switching Frequency =350Khz

Core loss= 1.94W

*Pd primary winding =**0.740W***
*Pd Secondary winding =**1.44W***
*Total Transformer Loss = **4.12W***

η transformer=99.58%

1KW , Vo=12V @ 83A

NEW TRENDS IN MAGNETICS

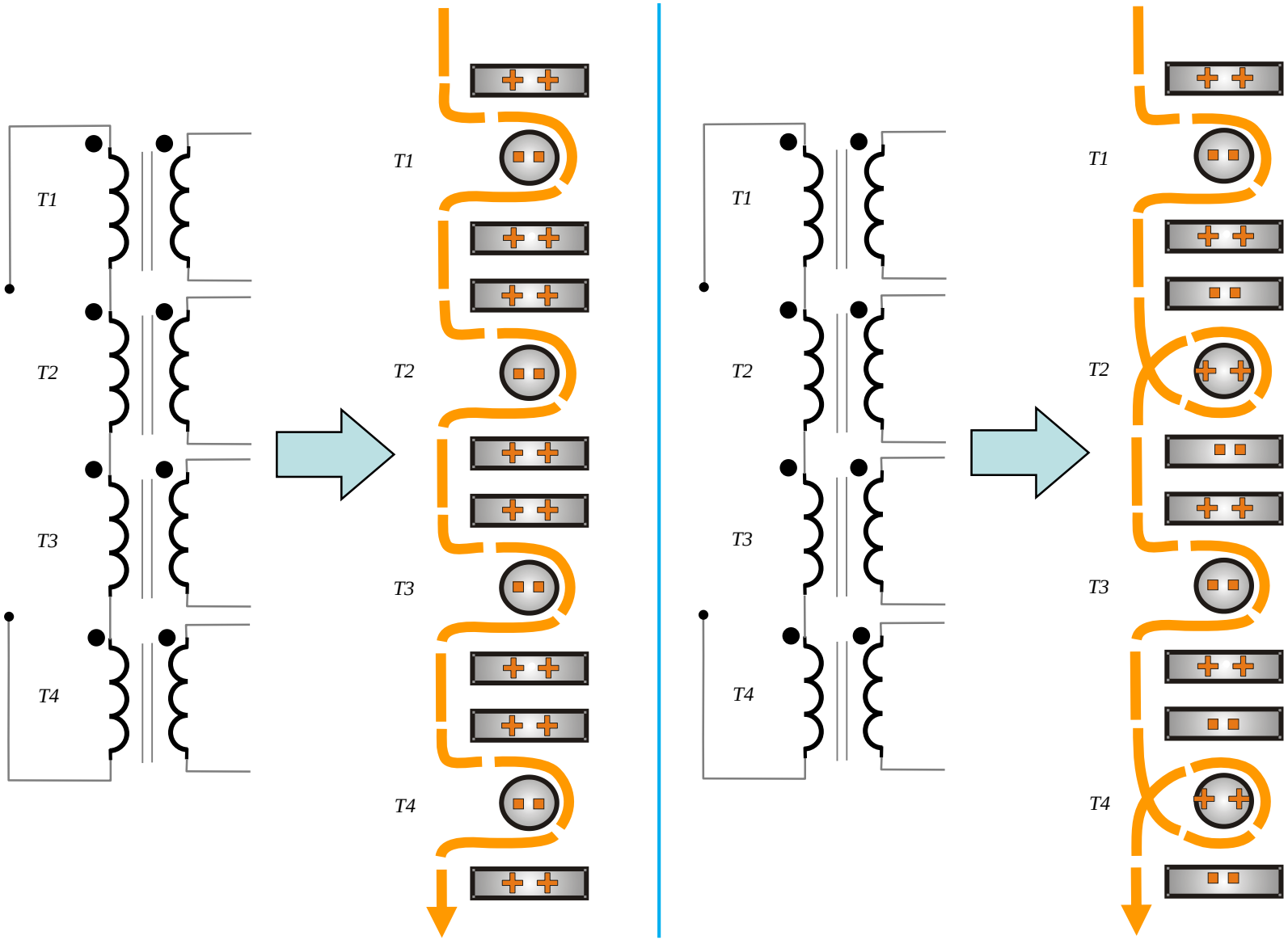
T1
T2
T3
T4
T1
T2
T3
T4
T1
T2
T3
T4
T1
T2
T3
T4

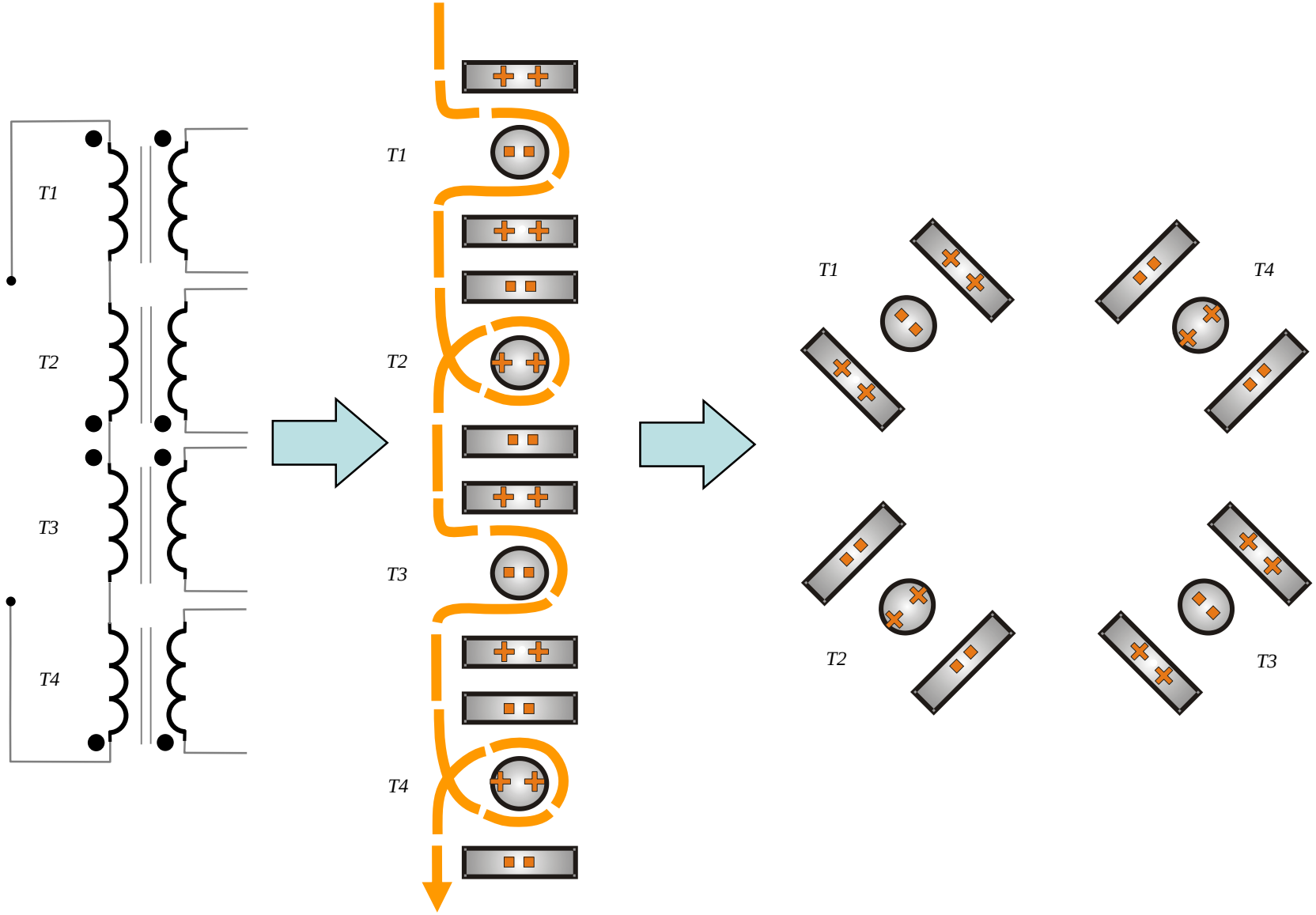
T1
T2
T3
T4
T1
T2
T3
T4
T1
T4
T2
T3

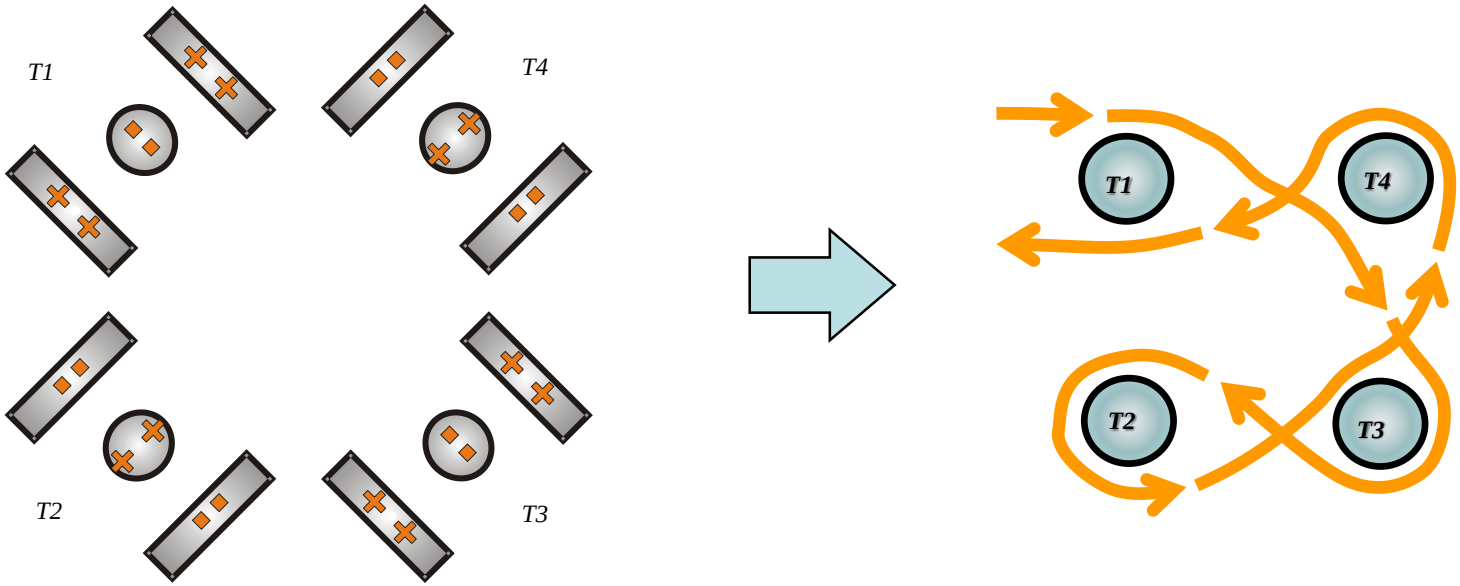

APEC 2014 [3]

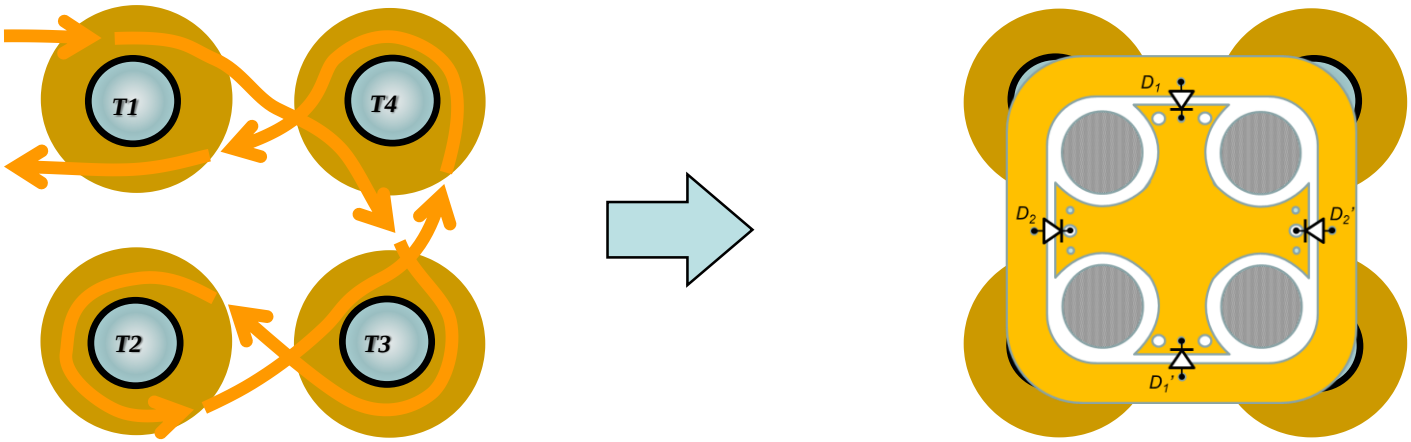

APEC 2014 [3]

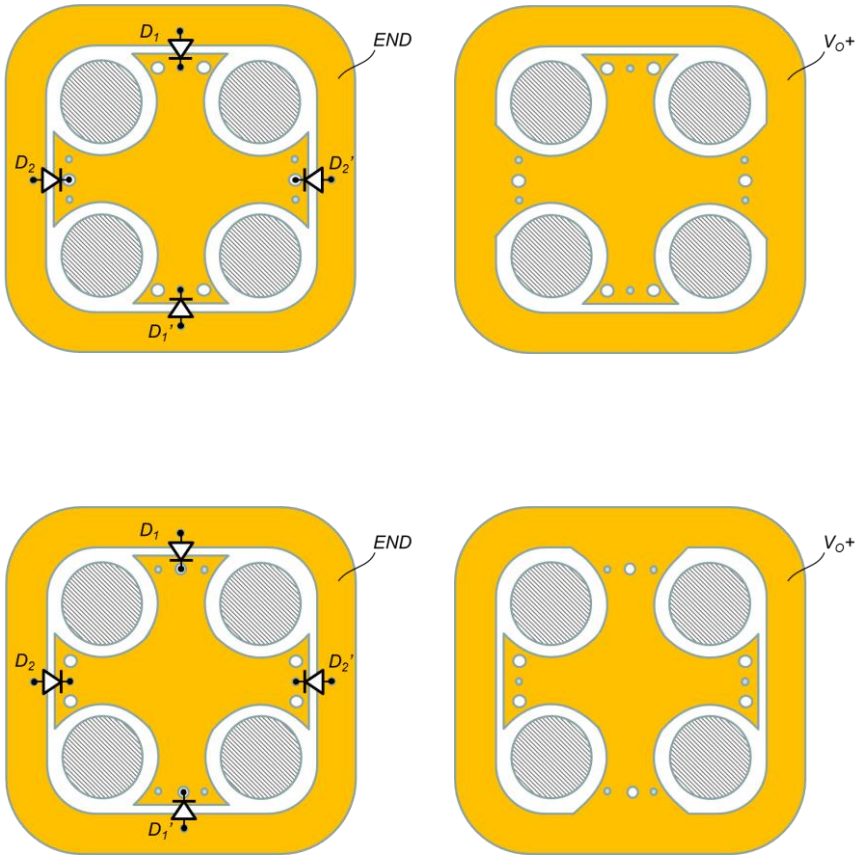

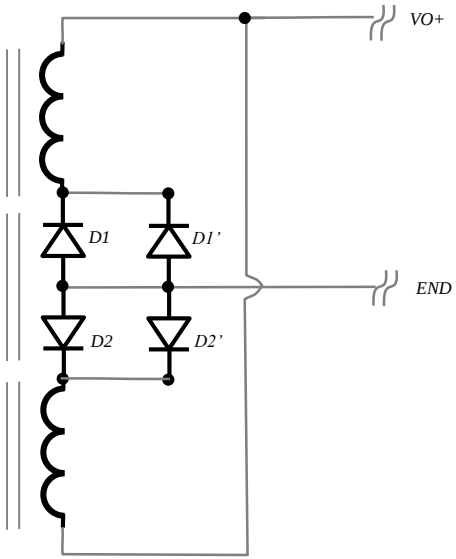

APEC 2014 [3]

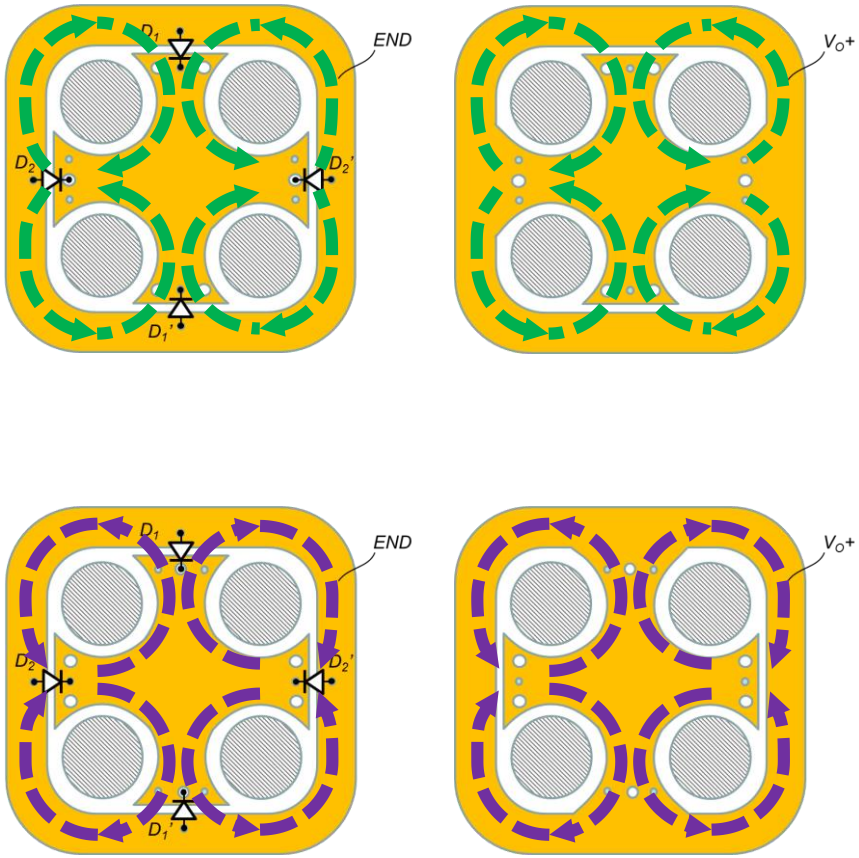

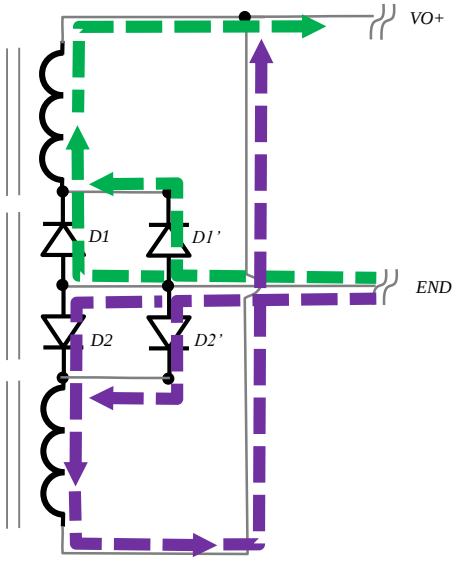

APEC 2014 [3]

CONCLUSION

The evolution in power processing technology does impact the magnetic requirements

- **Lower Leakage Inductance in the transformer led us towards magnetic structures which are inherently more efficient.**

- **The quest for lower leakage inductance also led to the multi-leg transformer technology which has additional benefits like a better copper utilization.**

- **Higher frequency operation can increase the transformer efficiency in application wherein there are size limitations and limited copper availability.**

- **New power conversion technology did enable the development of more efficient magnetic structures.**

The New Technology and the New Magnetic Structures allowed us to reach 99% Efficiency in isolated DC-DC Converters

Thanks!

References

[1] Ionel Jitaru " Soft Switching Converter by Steering the Magnetizing Current" Patent Pending

[2] Ionel Jitaru " Method and Apparatus fro Obtaining a Soft Switching on all the Switching Elements through Current Shaping and Intelligent Control" Patent Pending

[3] Ionel Jitaru "Magnetic Structures for Low Leakage Inductance and Very High Efficiency" Patent Pending, 2014

[4] Ionel Jitaru " Full Bridge Converter with soft switching on all the switching elements" US Patent Pending

Some of the technologies presented in this seminar may be the subject of patent applications, please contact Rompower Energy Systems for further details.