Design Space of Flyback Transformers

George Slama

Senior Application and Content Engineer

What is the design space?

- Background – flyback transformers
- Energy storage concept
- Minimum energy curve – inductance - discontinuous
- Maximum energy curve – inductance - continuous mode
- Duty cycle limits
- Reflected voltage limits
- Mixed mode operation
- Tolerances

Background

- The term ‘flyback’ comes from the days of cathode ray tube (CRT) in televisions and monitors where the beam had to fly back after each scan to the start position for the next scan line. This required a high horizontal deflection voltage between 10 - 50 kV
- Today typically used in universal wide input charging adapters outputting low voltage
- Flyback converters come in many flavors
  - DCM, CCM, BCM, QRM, …

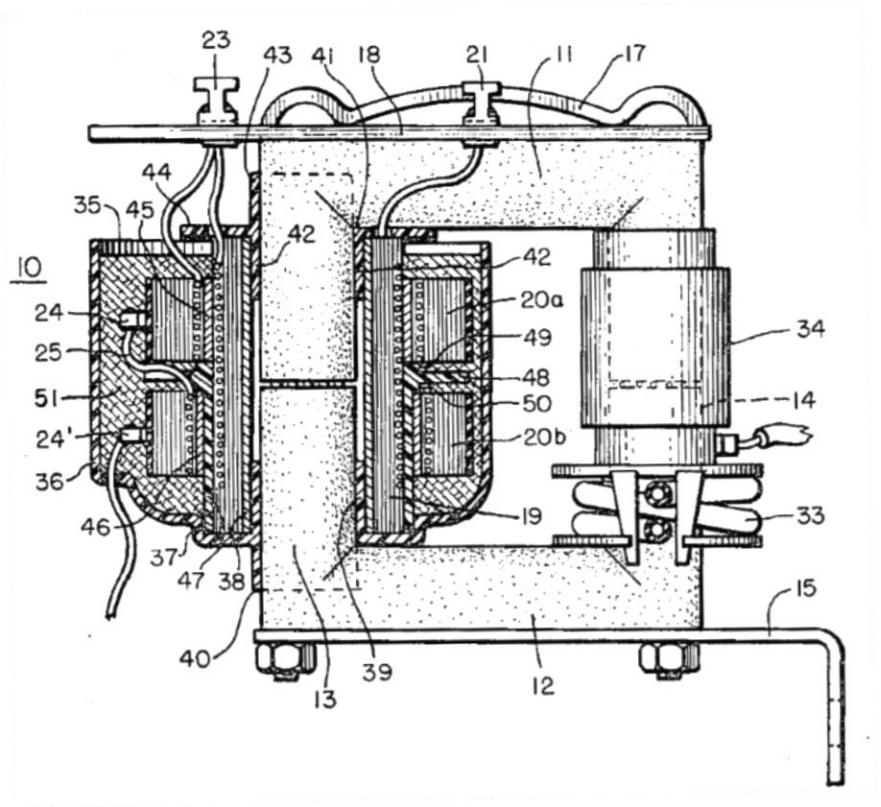

US Patent US3665288A - 1972
Theodore J Godawski
Zenith Electronics LLC

Operation

- T1 – switch is on – increasing current flow through primary winding building magnetic field – no current in secondary winding - load supplied from capacitor
- T2 – switch is off – decreasing current flow in secondary winding as magnetic field collapses – no current in primary winding
- Only one winding carries current at a time
- Energy transfer through magnetic field

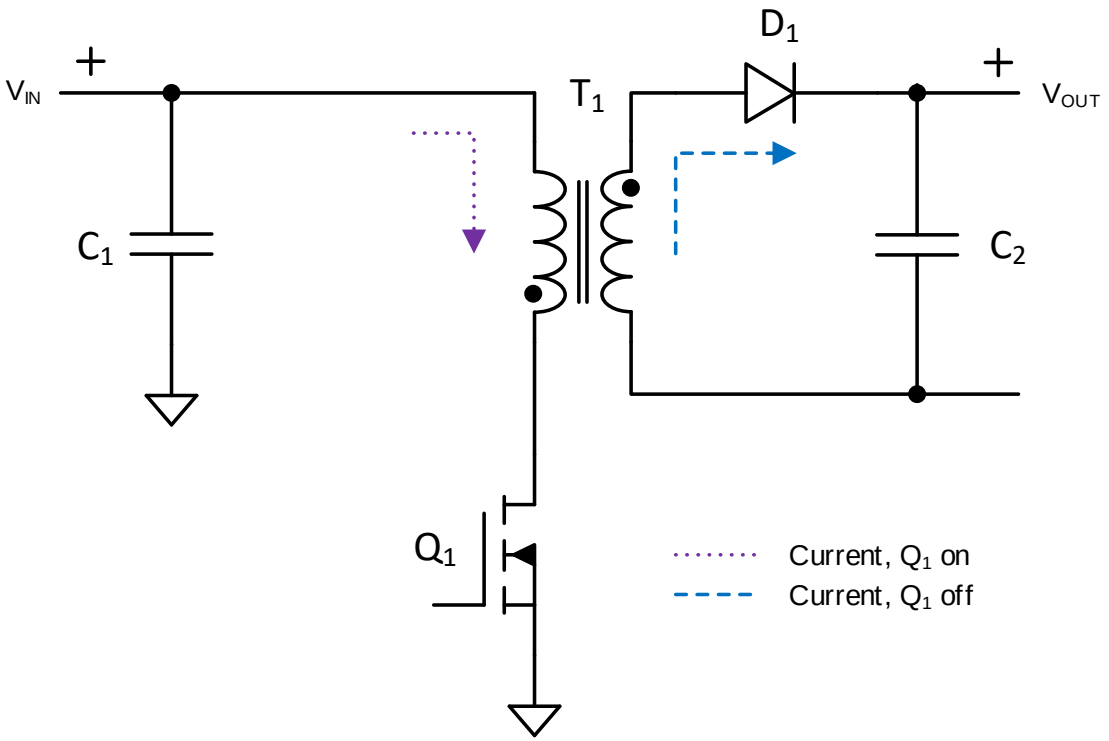

Variations

- DCM – Discontinuous Conduction Mode
  - Current returns to zero
  - Variable dead time – fixed frequency
- QRM – Quasi Resonant Mode
  - Current returns to zero
  - Small dead time – valley switching
  - Variable frequency
- BMO – Boundary Mode Operation
  - Current returns to zero
  - No dead time – variable frequency
- CCM – Continuous Conduction Mode
  - Current always flowing
  - Duty cycle varies only with input voltage

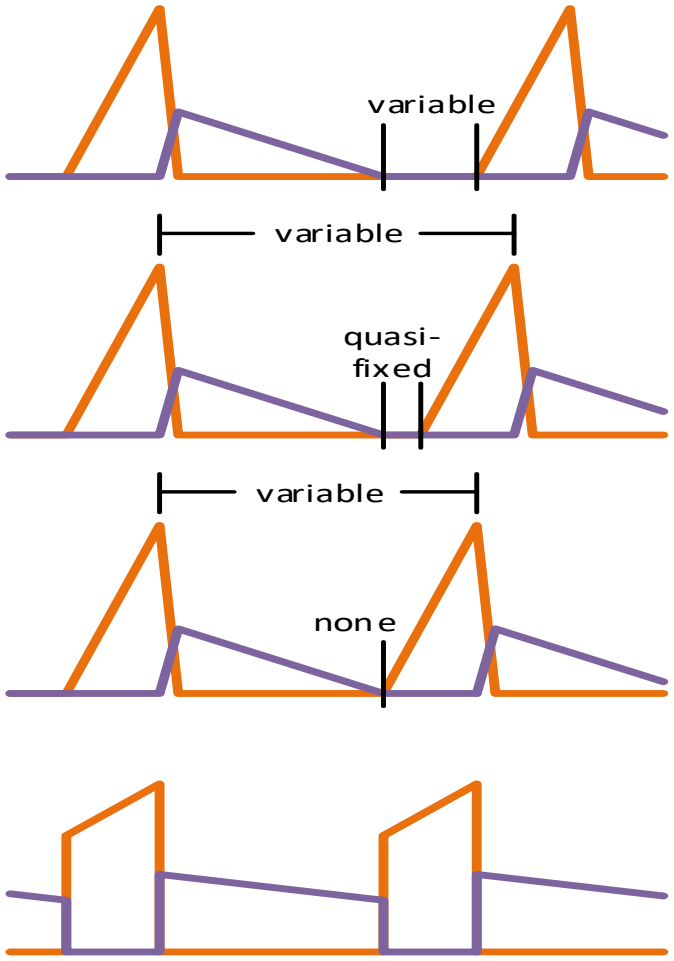

The zone

- Flyback transformers are very common in wide input, low wattage power supplies
  - Turns ratio improves duty cycle usage
  - Provide galvanic isolation to meet safety standards
  - Low component count

- App notes usually give you one formula for determining the inductance value
- In reality there a range or a zone of applicability
- This zone is bounded by different circuits elements
  - Minimum energy requirements
  - The switching device voltage ratings – MOSFET and diode
  - Applied component margins and deratings
  - Frequency and duty cycle
  - PWM control modes

Things to understand

- For efficiency we use the converter efficiency because the transformer has to be able to make up for the lost power (losses) of other devices
- Somewhere we set a boundary for CCM/DCM, typically 50% duty cycle
- The control scheme changes when crossing DCM/CCM boundary

- You can look at it as a dc voltage transfer function or …
- You can use load resistance

- In CCM duty cycle does not change with load, only input voltage → constant voltage
- In DCM duty cycle changes with load and input voltage → constant current

Limitations

- Leakage inductance from less than perfect coupling of windings
- Snubber dissipates energy, limiting the voltage
- Secondary voltage reflects to the primary
- MOSFET Vds is fixed typically derated to have a margin
- Secondary diode has similar restrictions
- Duty cycle is limited
- Peak current limits for switch and rectifier

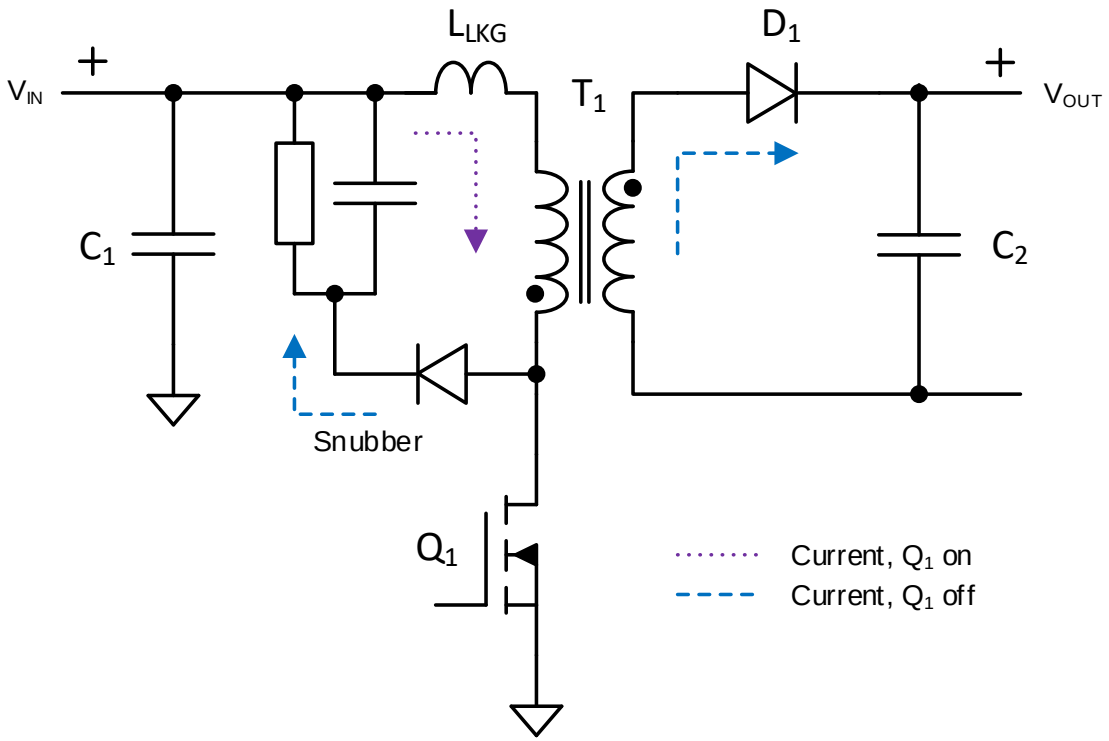

Reflected voltage limits

- MOSFET needs to be derated or margined
- Allowance for leakage inductance V_{SPIKE}
- Reflected output voltage
- Maximum input voltage

- $V_{IN} + V_R + V_{SPIKE} + V_{MARGIN} = V_{DS}$

- Can adjust V_R with turns ratio
- Can adjust V_{SPIKE} with snubber and leakage specification

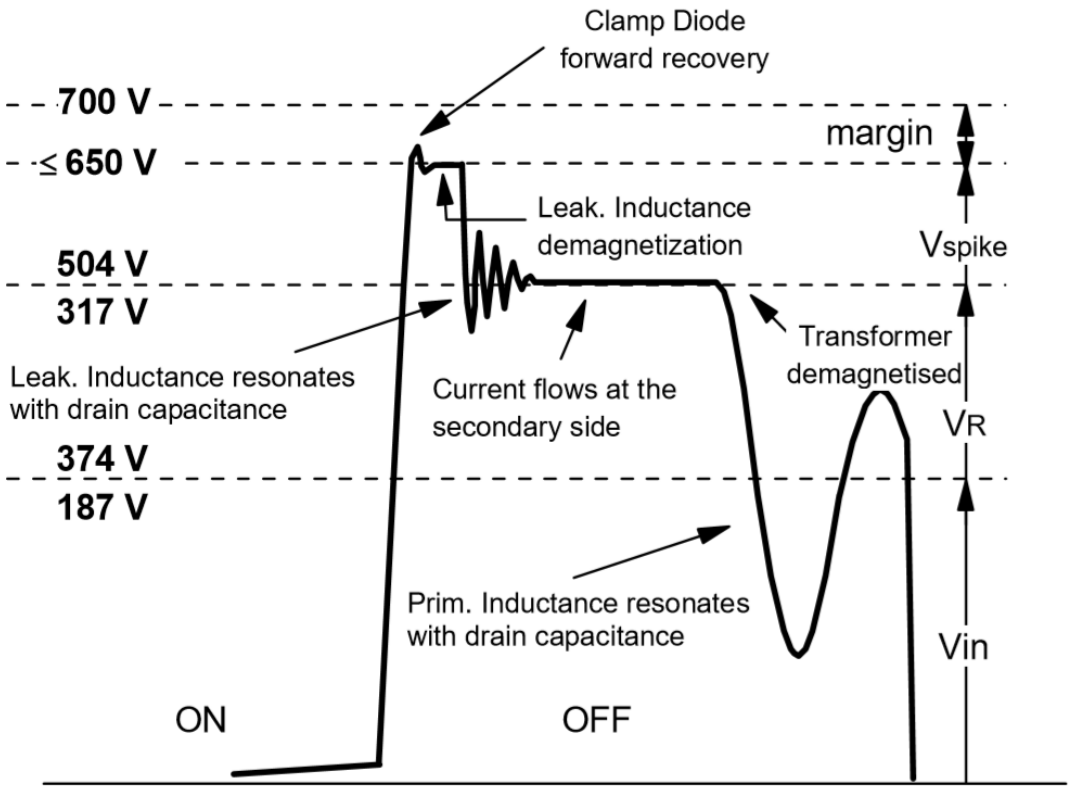

AN1262 App Note, STMicroelectronics

Worst case conditions - DCM

- Worst case vs. nominal conditions
  - Highest load
  - Lowest input voltage
  - Maximum duty cycle
- Other corner is
  - No or lowest load
  - Maximum input voltage
  - Minimum duty cycle
- Short circuits, tolerances, temperature effects on core material performance

Inductance flavors

- L_c - Chord Inductance
  (or amplitude inductance)
- L_d - Differential Inductance
- L_r - Reversible Inductance
- L_w - Energetic Inductance

$$L_w = \frac{2\int_0^{\Psi} i\, d\Psi}{i^2}$$

- Normally $L_d < L_w < L_c$

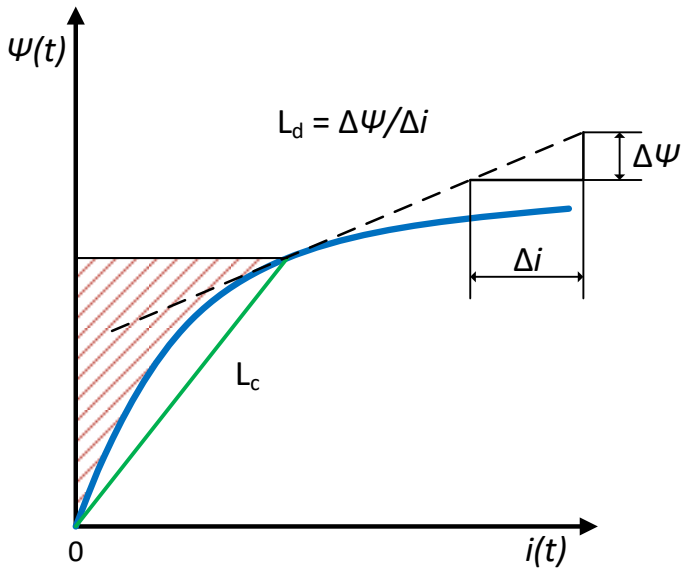

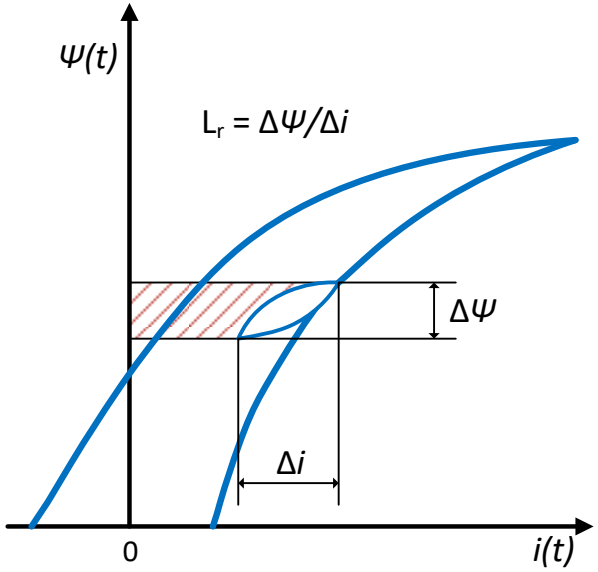

Bossche, Alex van den., Valchev, 2005. *Inductors and Transformers for Power Supplies.* Boca Raton, FL, CRC Press

Energy capacity of a core

- From the basic energy equation you can show that the energy capacity of a core is dependent on
  - B = maximum useable core flux
  - A_e = cross sectional core area
  - AL = which is a function of the gap
- If you want to store more energy in the core, eventually it must get bigger
  - B_{SAT} is a limited
  - Gapping has a practical limit (~< 3% of l_e)

$$W = \frac{1}{2} L I^2$$

$$\mathrm{W} = \frac{A_e l_e B^2}{2\mu_0 \mu_e}$$

$$W = \frac{B^2 A_e^2}{2AL}$$

$$AL = \frac{\mu_0 \mu_e A_e}{l_e}$$

B, A_e, Gap(μ_e)

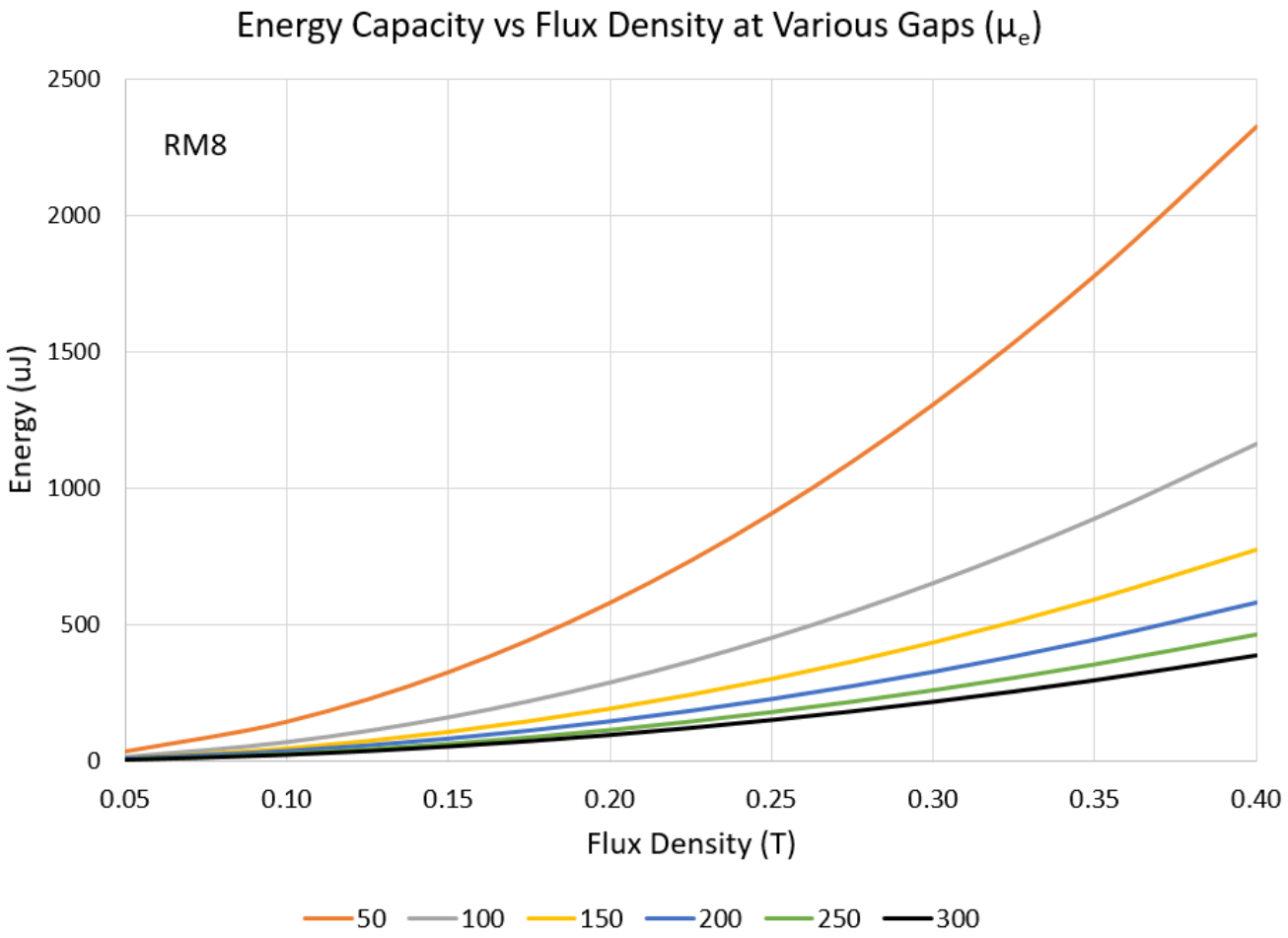

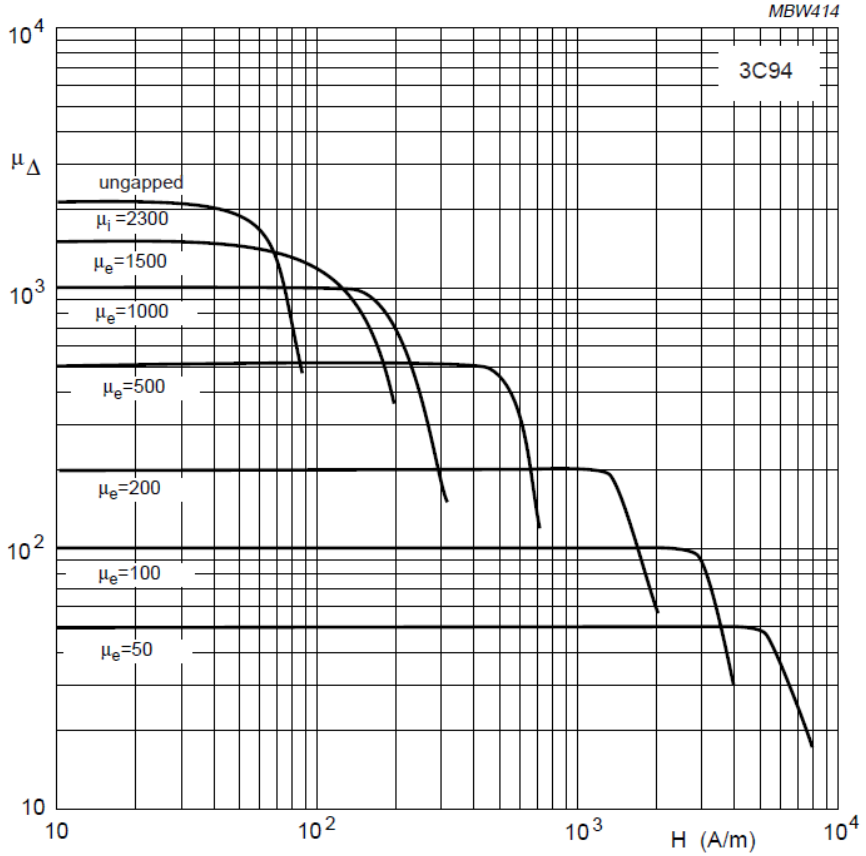

Material vs. Temperature

Ferrite

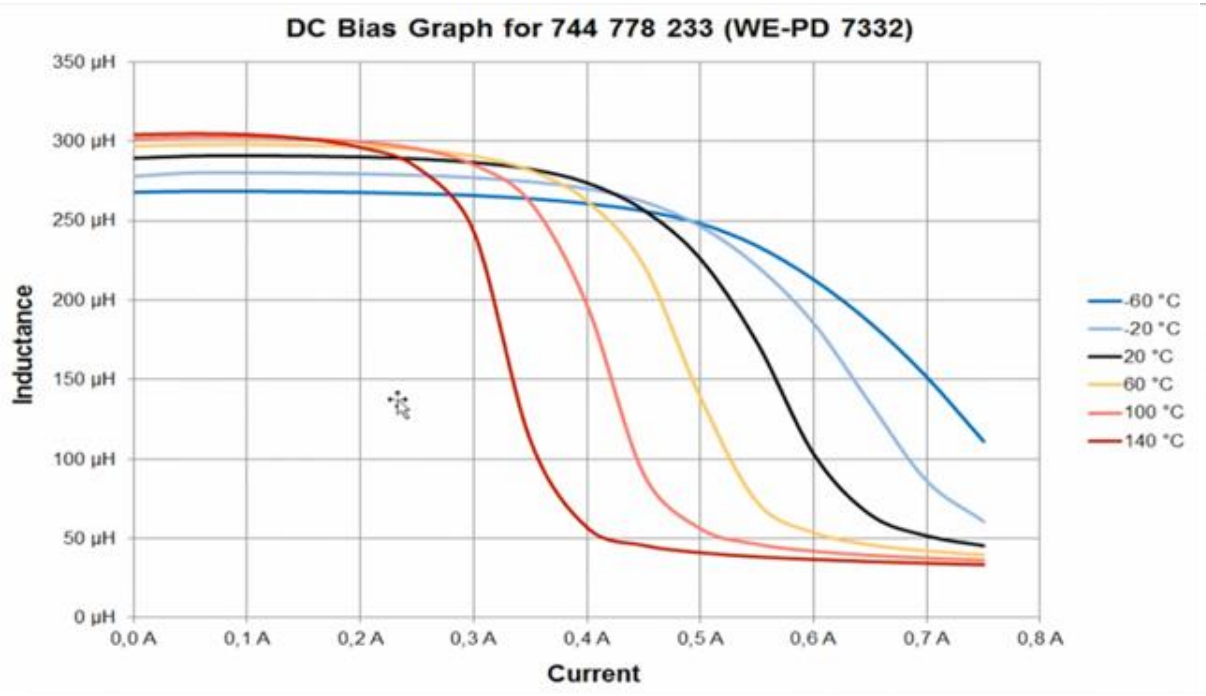

Powder Core

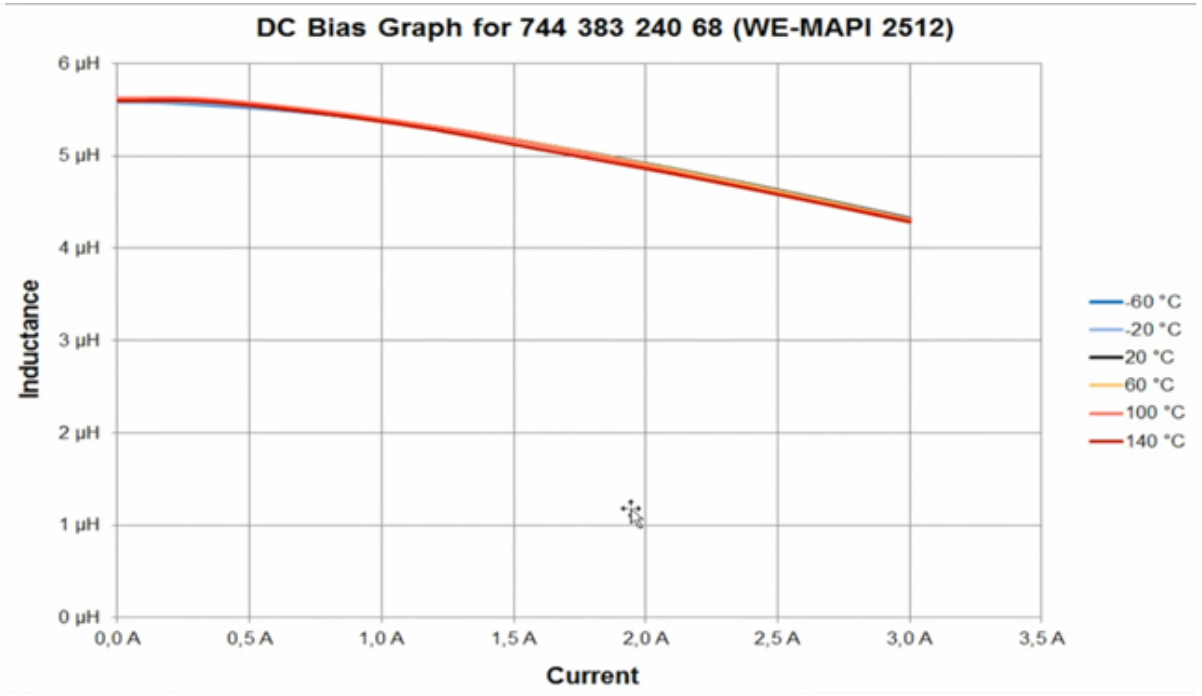

Concepts

- One way to look at it is inductance vs. duty cycle
- Another way is inductance vs. reflected voltage or turns ratio

- You need a minimum amount of energy in each cycle

$$W = \frac{1}{2} L \cdot I_{PK}^2 \qquad L \cdot di = V \cdot dt \qquad dt = \frac{D}{f}$$

$$W = \frac{L \cdot V^2 \cdot dt^2}{2 \cdot L^2} = \frac{V^2 \cdot D^2 \cdot f^2}{2 \cdot L}$$

L vs. DC vs. Size

- As duty cycle increases, inductance decreases while peak current increases
- Energy storage is proportional to $L*I_{PK}$^2 while…
- Inductor core size is proportional only to $L*I_{PK}$
- Doubling I_{PK} will reduce required inductance to ¼ which…
- Reduces the required cores size to ½
- Good design makes duty cycle as large as possible

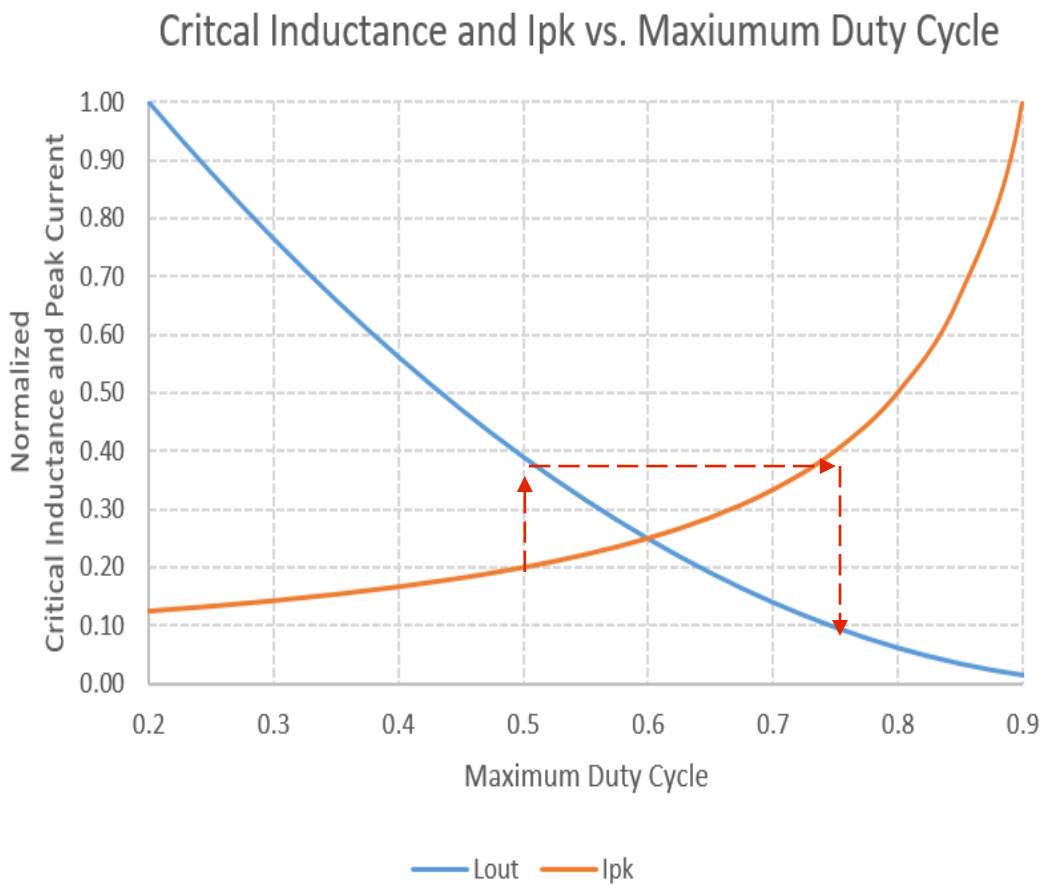

Minimum energy curve

- Depends on inductance and peak current
- This depends on power out, efficiency and frequency
- Combined
- May not know peak current therefore

$$L = \frac{V_{IN}^2 \cdot D^2 \cdot \eta}{2 \cdot P \cdot f}$$

$$W = \frac{1}{2} L \cdot I_{PK}^2$$

$$W = \frac{P_{OUT}}{f_{SW} \cdot \eta}$$

$$L_{MAX} = \frac{2 \cdot P_{OUT}}{f_{SW} \cdot \eta \cdot I_{PK}^2}$$

Critical inductance

- Critical inductance is where the dead time goes to zero
- Influenced by the turns ratio
- DCM inductance is too big
- CCM inductance is too small
- BMO inductance is just right

$$L_{CRIT} = \frac{V_{IN}^2}{2P_{OUT}f\left(\frac{V_{IN}N_S}{V_{OUT}N_P}+1\right)^2}$$

$$L_{O,CRIT} = \frac{1}{2P_{OUT}f\left(\frac{1}{V_{IN}}+\frac{1}{V_{OUT}}\right)^2}$$

Note: V_{IN} = minimum, V_O includes V_D,
P_{OUT} includes efficiency, L_O is output (secondary side)

Critical inductance

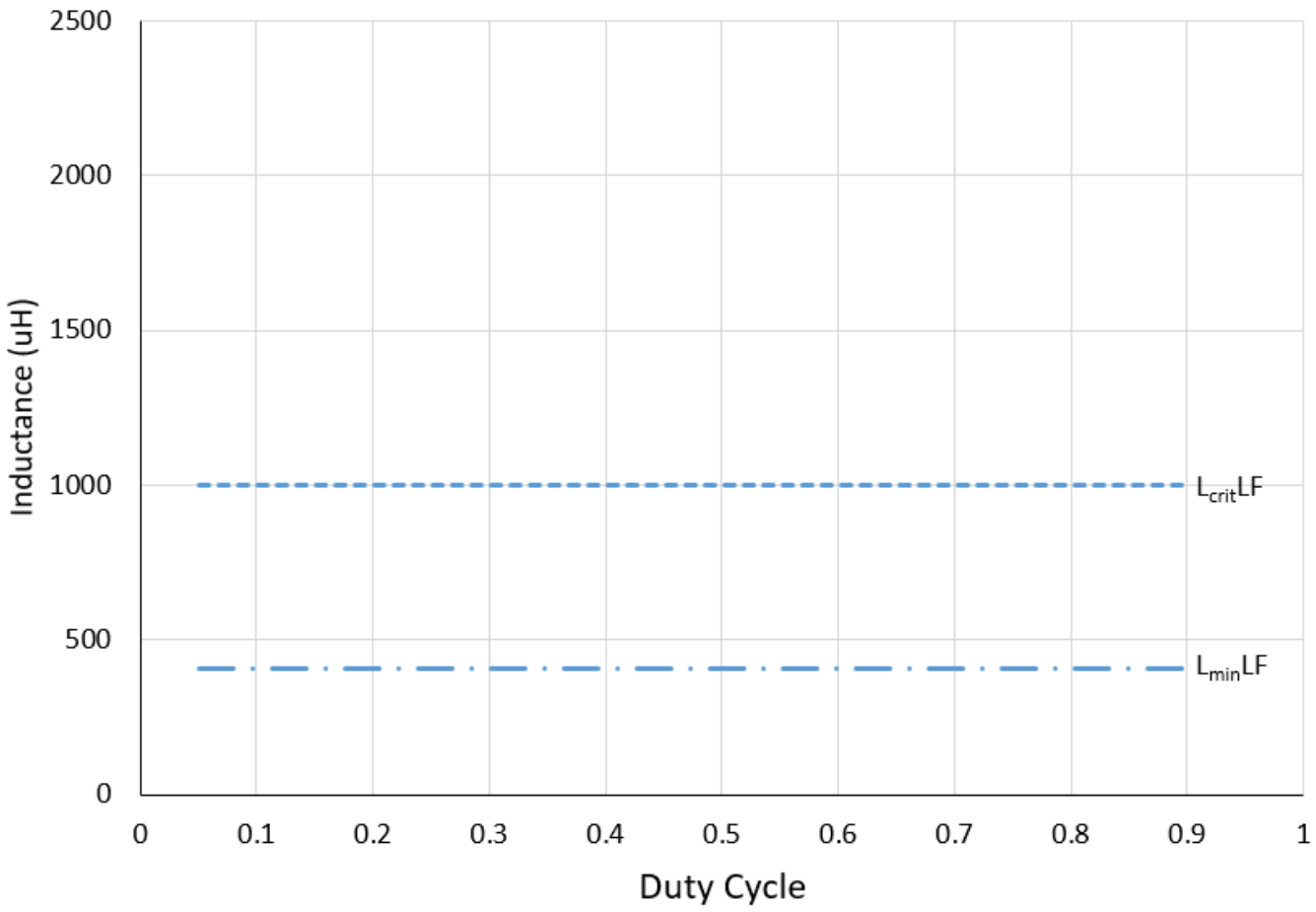

Leakage inductance voltage spike

- The is a function of the peak current flowing in the leakage inductance at the time of turn off which is the same primary peak current and the impedance of the resonant circuit formed by the leakage inductance and the transformer winding self capacitance plus the MOSFET's capacitance, C_{DS}.

$$\omega_O = \frac{1}{\sqrt{L_{LKG}(C_{PRI} + C_{DS})}}$$

$$Z_O = \omega_O L_{LKG} = \frac{1}{\omega_O (C_{PRI} + C_{DS})} = \sqrt{\frac{L_{LKG}}{C_{PRI} + C_{DS}}}$$

$$V_{LKG} = I_{PK}\sqrt{\frac{L_{LKG}}{C_{PRI} + C_{DS}}}$$

L_{LKG} = assume 1%, unknown at start
C_{PRI} = 12 pF, typical
$C_{DS} = C_{OSS} - C_{RSS}$ = 330-120 pF, typical

Kazimierczuk, Pulse-Width Modulated DC-DC Power Converters, pg 239

Permissible turns ratio range

- Limit based on reflected secondary voltage and primary side switching MOSFET's V_{DS}

$$n_{MAX} = \frac{(V_{DS} - V_{IN,MAX} - V_{SPIKE})}{V_{OUT} + V_F}$$

- Limit based on reflected primary voltage and secondary diode's voltage rating

$$n_{MIN} = \frac{V_{IN,MAX}}{V_R}$$

- Limit based on maximum duty cycle

$$n_{MIN} = \frac{V_{IN,MIN} \cdot DC_{MAX}}{V_{OUT} + V_F - (1 - DC_{MAX})}$$

- Derate MOSFET V_{DS} by 10%
- Derate secondary diode V_R by 30%
- Estimate V_{SPIKE} as 10% of MOSFET V_{DS}

V_{in} min-max limit

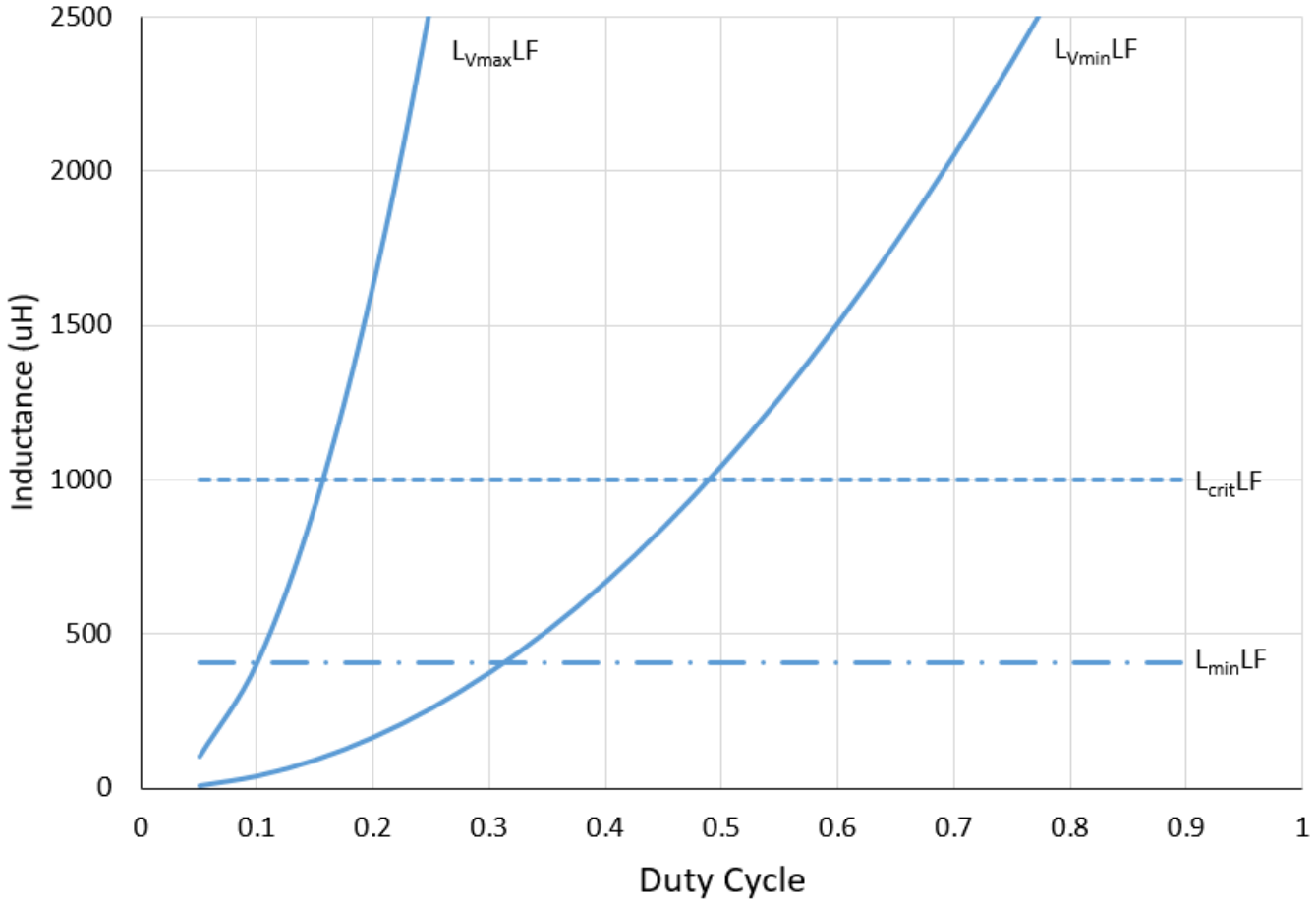

Putting it all together

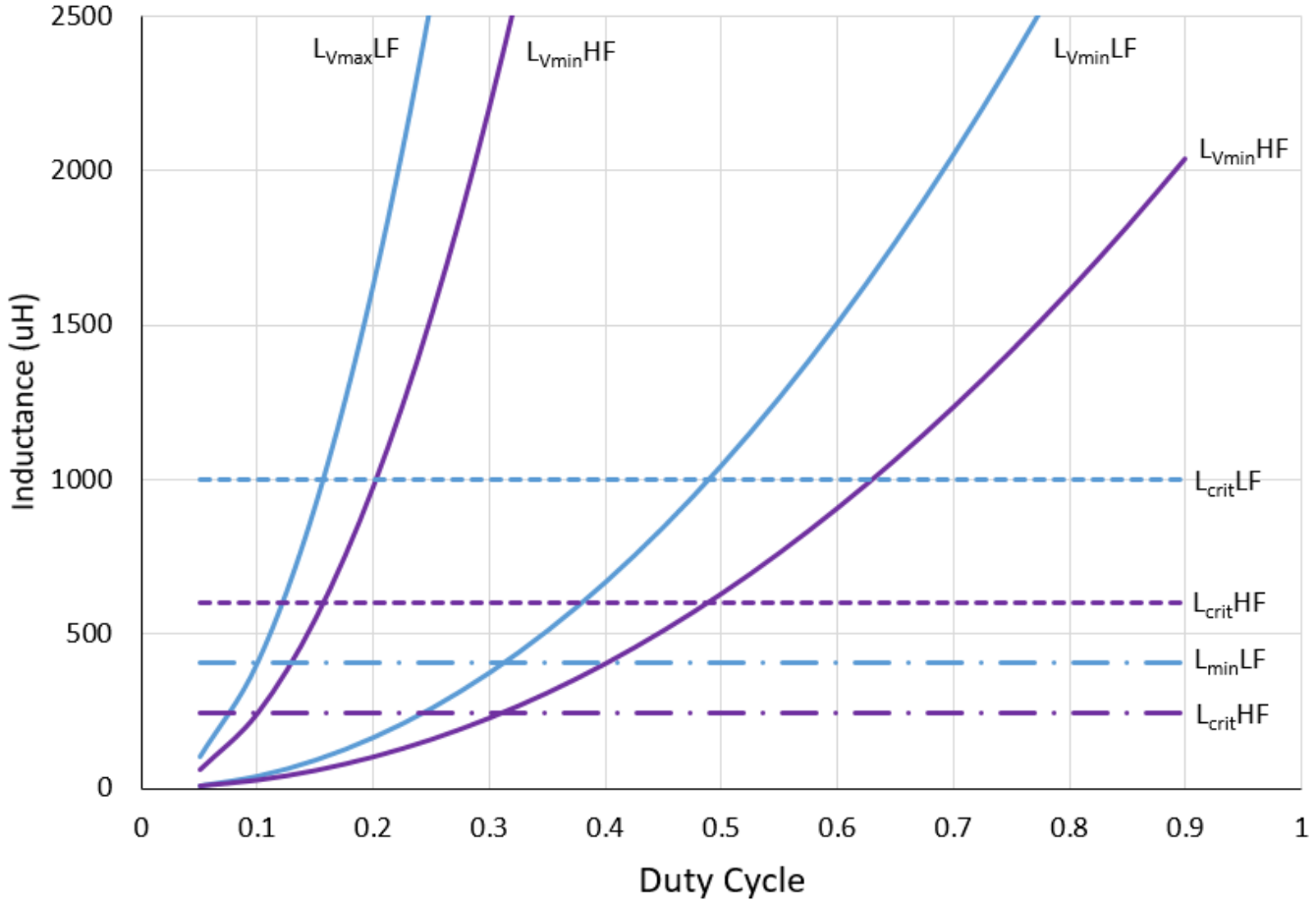

Core selection criteria

- The primary inductance is that of a storage inductor but the flyback transformer needs additional space for the secondary inductor winding and insulation, therefore it is bigger
- If low losses are desired, large and more expensive cores may be required
- If an off-line converter, creepage and clearance distances will add to the overall size

- There is no direct way to the optimal transformer
- There are a large number of partially contradictory requirements have to be met simultaneously.
- Many parameters depend on each other
- The designer has to make many discretionary decisions

Optimum effective permeability

Energy in terms of copper loss

$$\tfrac{1}{2} L I^2 = \frac{\mu_{eff}\mu_0 A_c N A_w}{2 r_w (\mathrm{MLT}) K_i^2 l_e} P_{cu}$$

Equate in terms of I

$$\mu_{opt} = \frac{B_{sat} l_e K_i}{\mu_0 \sqrt{\dfrac{P_{cu\max} N A_w}{r_w (\mathrm{MLT})}}}$$

K_i = current waveform factor (I_{rms}/I_{pk})

Energy in terms of B_{max}

$$\tfrac{1}{2} L I^2 = \frac{A_c l_e}{2 \mu_{eff}\mu_0} B_{\max}^2$$

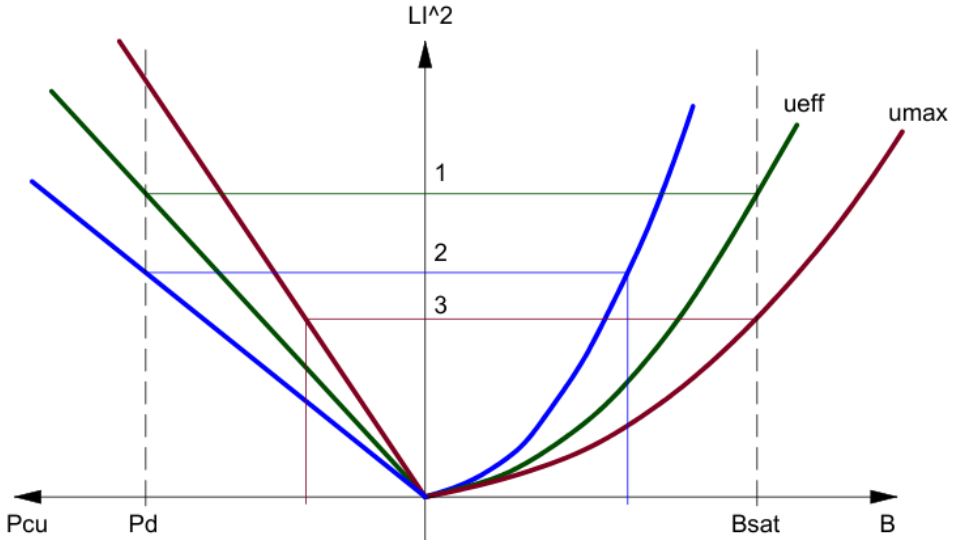

Stored energy as a function of flux density and dissipation

Transformers and Inductors for Power Electronics: Theory, Design and Applications, 1st Ed, W.G. Hurley, and W.H. Wolfe, 2013 John Wiley and Sons, Ltd.

Tolerances

- Every component in the circuit has a tolerance
- Some are more critical than others, some compensate for others – don’t over stack them
- Considerations
  - With DCM you can have too much inductance
  - Inductance tolerances are typically +/-10%
  - Controller’s tolerances
    - Frequency
    - Duty cycle
    - Current limit and response time

Conclusion

- The final inductance and turns ratio is a balancing act.
- Its possible to balance the requirements by adjusting transformer parameters
- There are more possibilities if other circuit component's rating can be adjusted
- Many new ICs use mixed modes to optimize efficiency.

Thank you!