Industry Session #: Energy Harvesting

Optimizing Piezoelectric Synchronized-Discharge Harvesters

Presented By –

Siyu Yang and Gabriel A. Rincón-Mora

Samsung Semiconductor Inc[1] and Georgia Institute of Technology[2]

jimsyyang@gatech.edu[1,2], Rincon-Mora@gatech.edu[2]

Wednesday, March 18, 2020

OVERVIEW

- Piezoelectric-Powered Sensors
- State of the Art
- Pre-Charge Symmetry
- Energy Transfers
- Output Power Comparison
- Conclusions

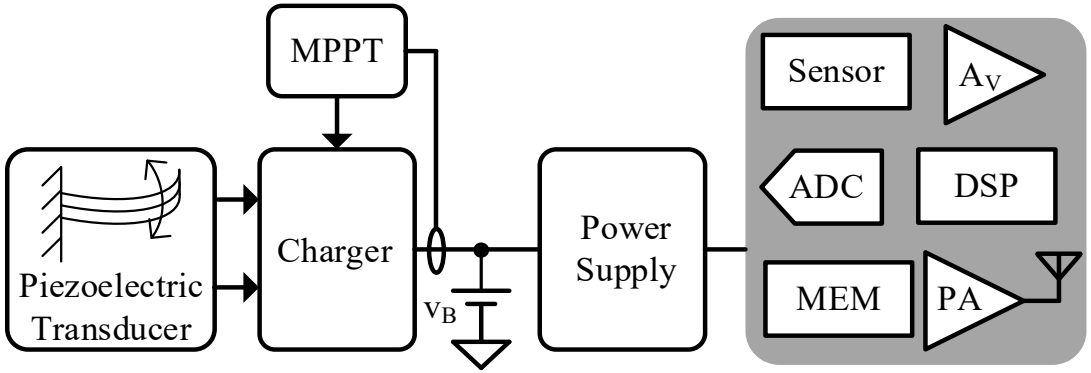

Piezoelectric-Powered Sensors

- **Wireless Microsensors**
  - Smart homes
  - Embedded Health Monitors
  - Vehicles
  - Industry
- **Features**
  - Environment and health monitoring
  - Automated home appliances and alarms
  - Automated pipelines
  - Saves money, energy, and lives

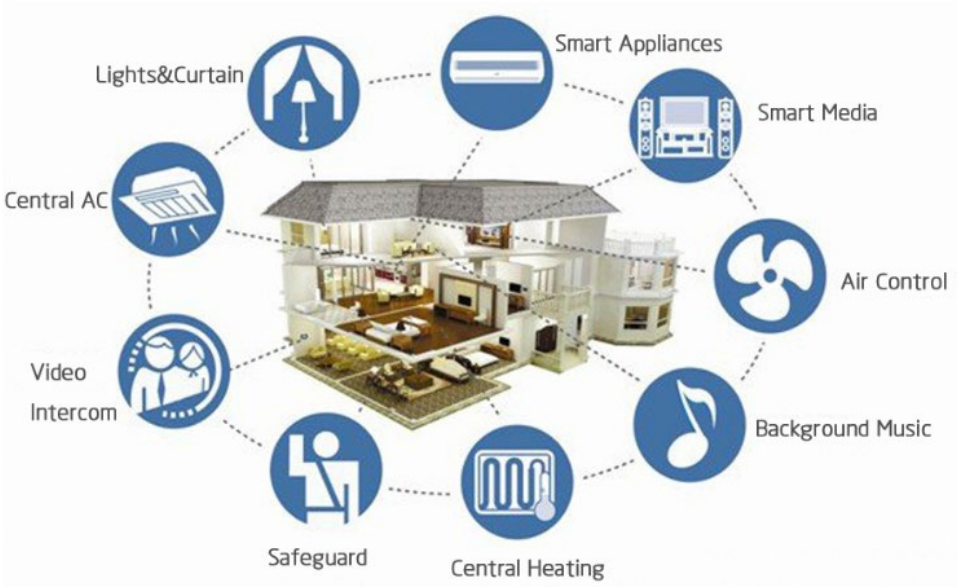

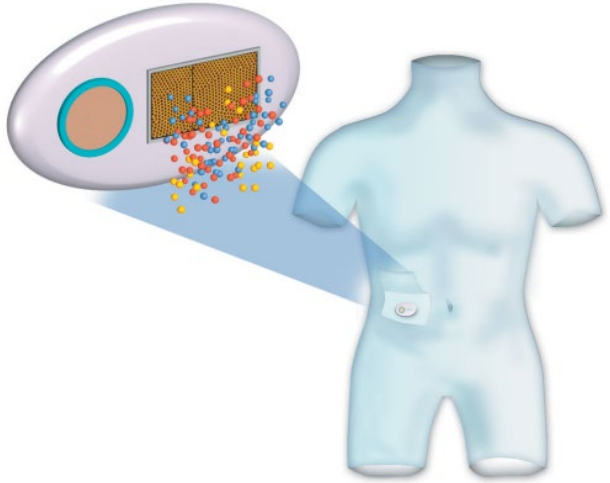

Piezoelectric-Powered Sensors

- **Wireless Microsensors Requirements**
  - Add intelligence
    - Processor
    - Sensor
    - Transmitter
  - Access difficult places
  - Compact, self-powered
- **Ambient energy sources**
  - Light
  - Temperature
  - Radiation
  - Chemical
  - Motion
    - Electromagnetic
    - Electrostatic
    - Piezoelectric ✓

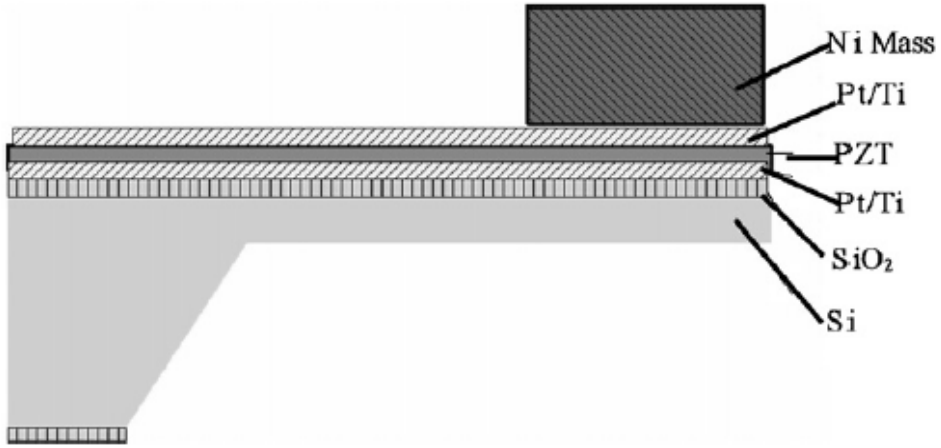

Piezoelectric Powered Sensors

- **Piezoelectric material**
  - Non symmetrical positive and negative charge
  - Charge center shifts when strained
  - Charge appears at the surface
- **Piezoelectric transducer**
  - Cantilever with mass
  - Mass vibration → alternating charge
- **Piezoelectric system**
  - Charger charges battery
  - MPPT tracks max. power point
  - Battery supplies loads

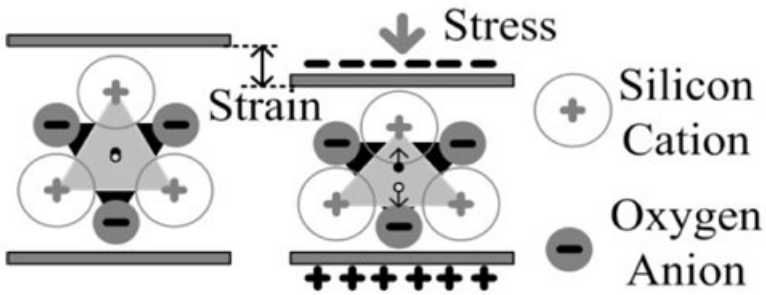

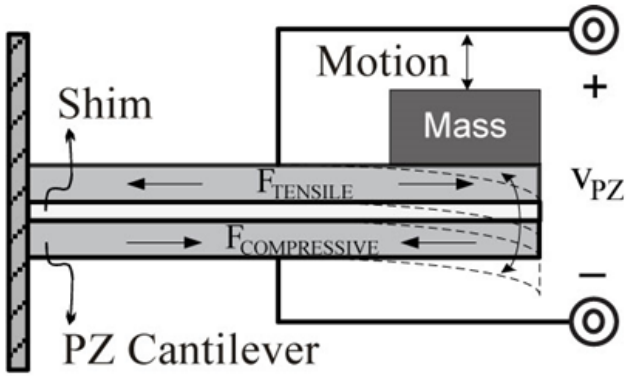

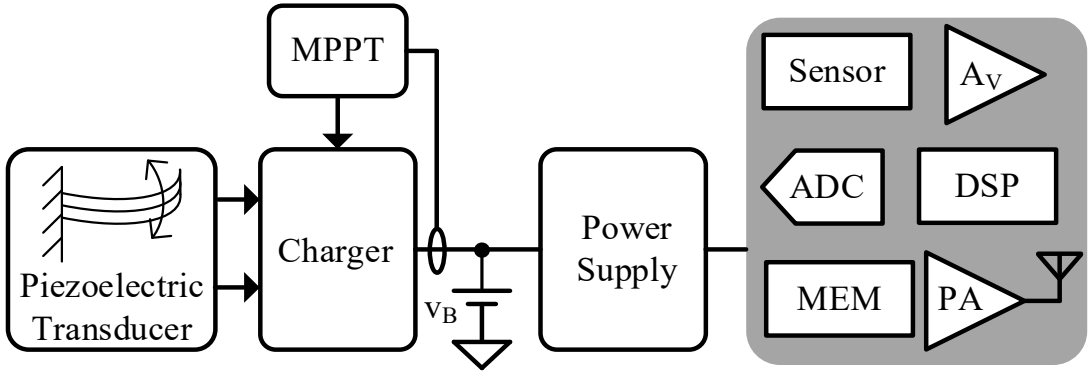

Piezoelectric Powered Sensors

- **Operation:** Vibration → i_{PZ} charges C_{PZ}
- **Limit:** Low mechanical-electrical coupling factor

  ∴ Vibration unaffected by voltage across C_{PZ}

  ∴ i_{PZ} &$\Delta v_{PZ(OC)}$ stays the same for each half cycle
- **Solution:** Increase v_{PZ} → i_{PZ} charges C_{PZ} at higher voltage

  → More drawn power

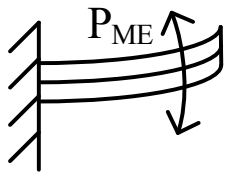

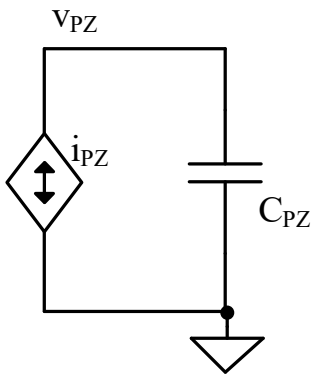

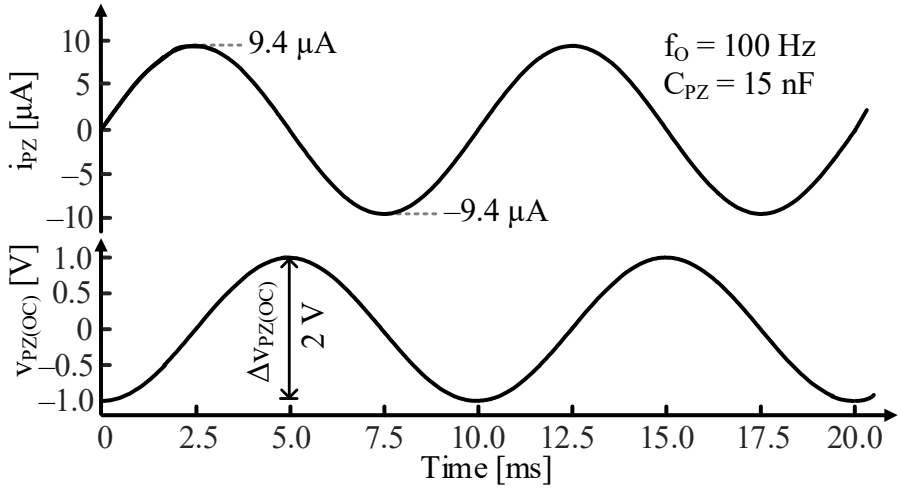

- **Limits:** Charger consumes power losses, and imposes breakdown limits
- **Objective:** Build charger with the highest drawn power, lowest losses, and least constraints.

State of the Art

- **Basic Full Bridge**

  Operation: Diodes steer i_{PZ} into C_{REC}

  Feature: Charge C_{REC} autonomously

  Limits:

  Half of the charge lost

  P_{PZ} varies with v_{REC}

  ∴ MPP charger regulates v_{REC}

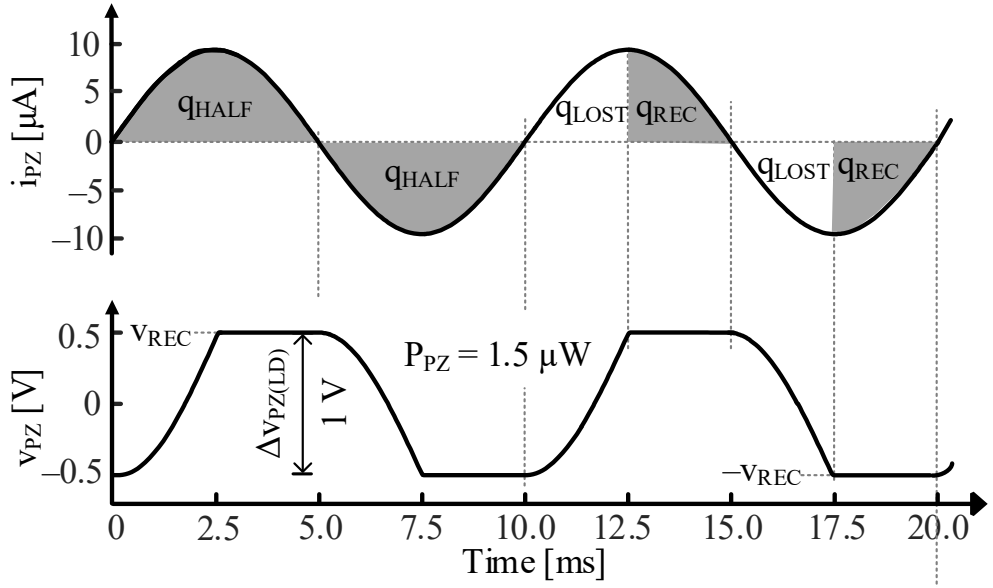

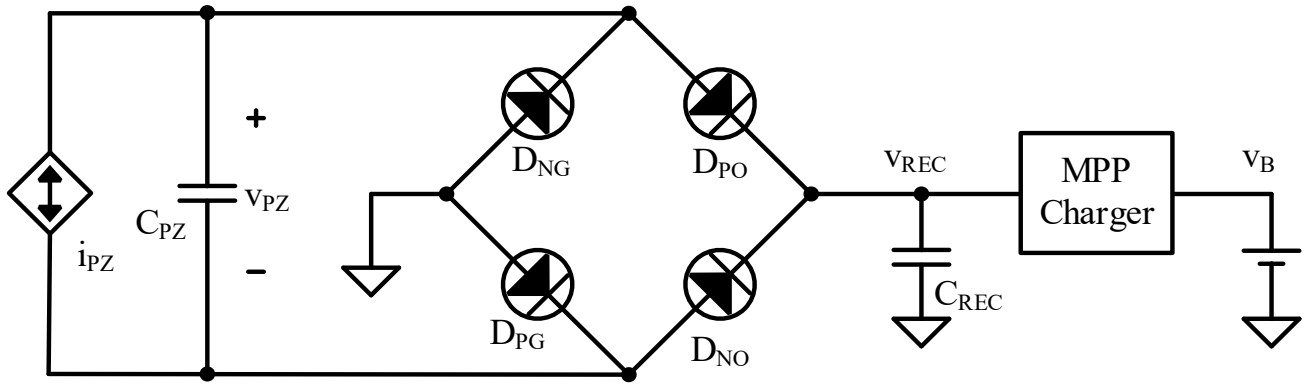

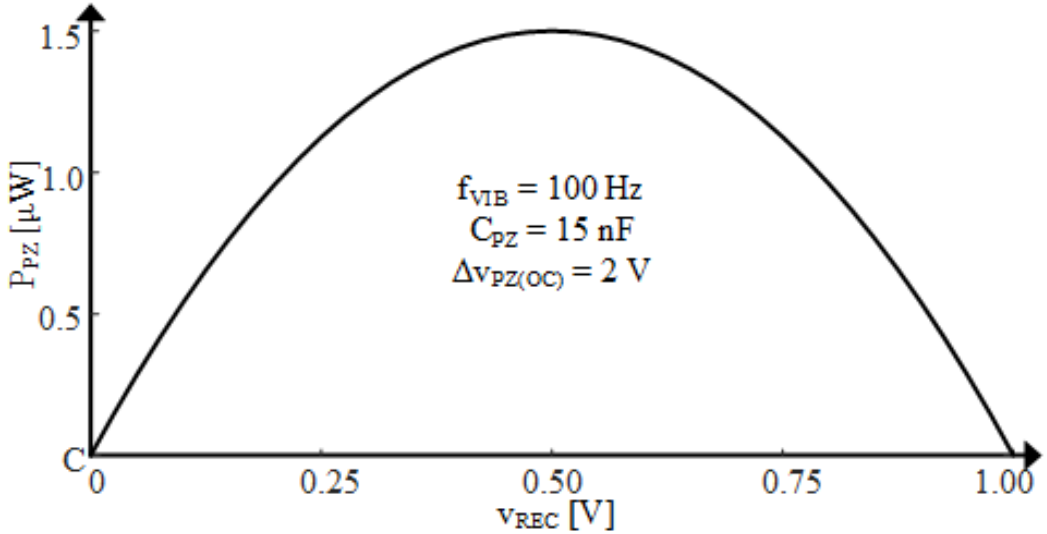

State of the Art

- **Switched Inductors**

  Operation:

  i_{PZ} charges v_{PZ} across half cycles

  L_X collects charge and charge battery

  Features:

  Collect all charge

  Charge battery directly

  Limits:

  Need synchronizer

  $P_{PZ} \propto \Delta v_{PZ(OC)}^2$

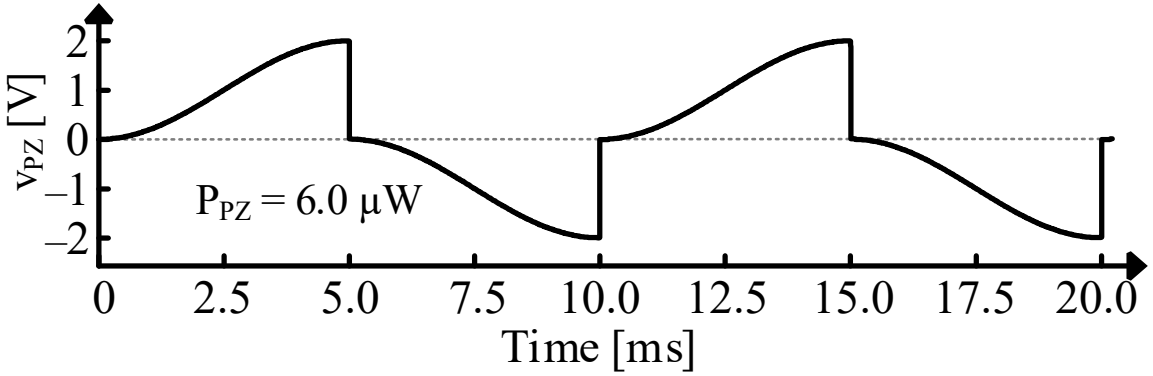

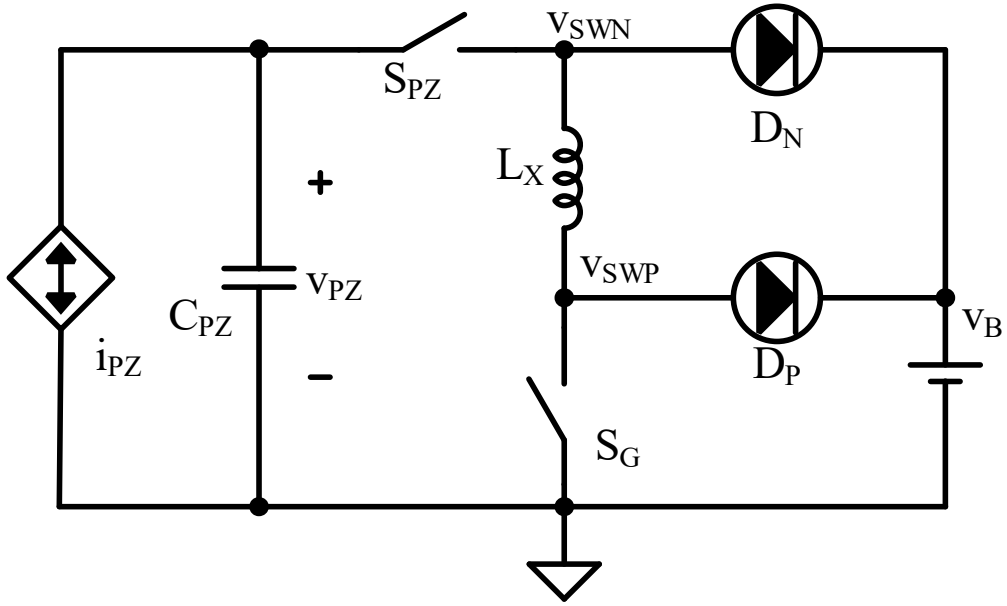

State of the Art

- **Pre-Charging**

Operation:

Before negative half cycle, pre-charge to $-v_{PC}$

i_{PZ} is collected at higher v_{PZ}, → higher P_{PZ}

Features:

Collect all charge

Charge battery directly

2 switches

$P_{PZ} \propto \Delta v_{PZ(OC)}(\Delta v_{PZ(OC)+}v_{PC})$

Limits:

Need synchronizer

Need negative supply

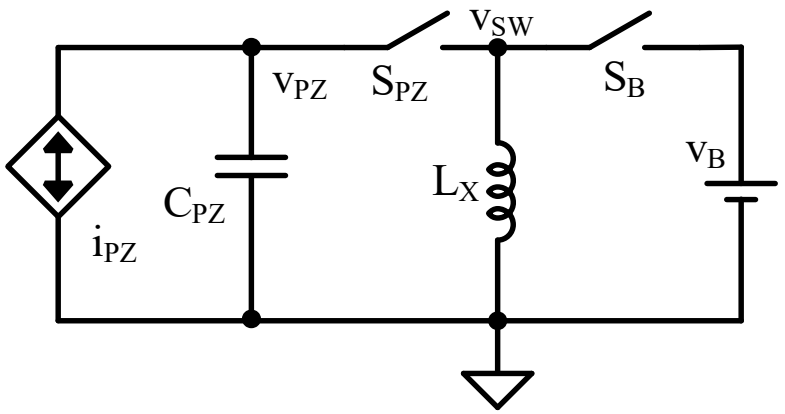

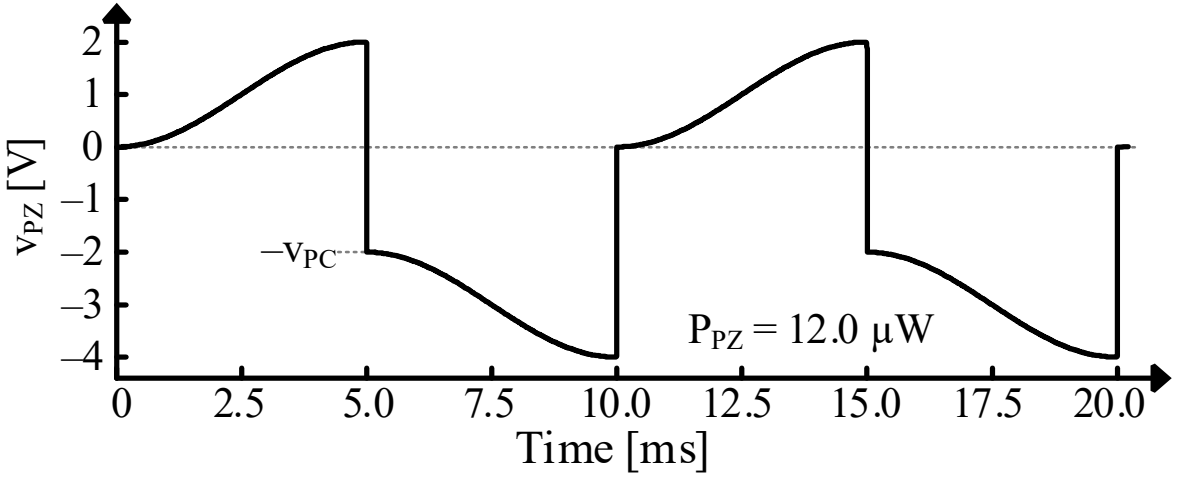

Pre-charge Symmetry

- **Symmetrical**
  - Pre-charge before each half cycle
  - Reuse some energy at the end
- **Asymmetrical**
  - No pre-charge before positive half
  - Use all the energy at the end of positive half cycle to pre-charge
  - Higher ohmic loss because of higher peak current

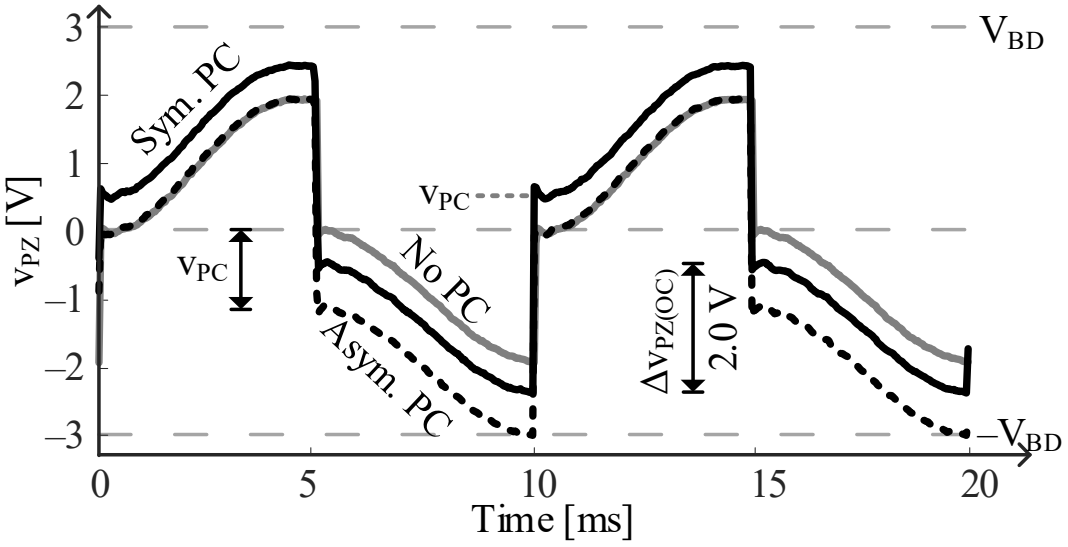

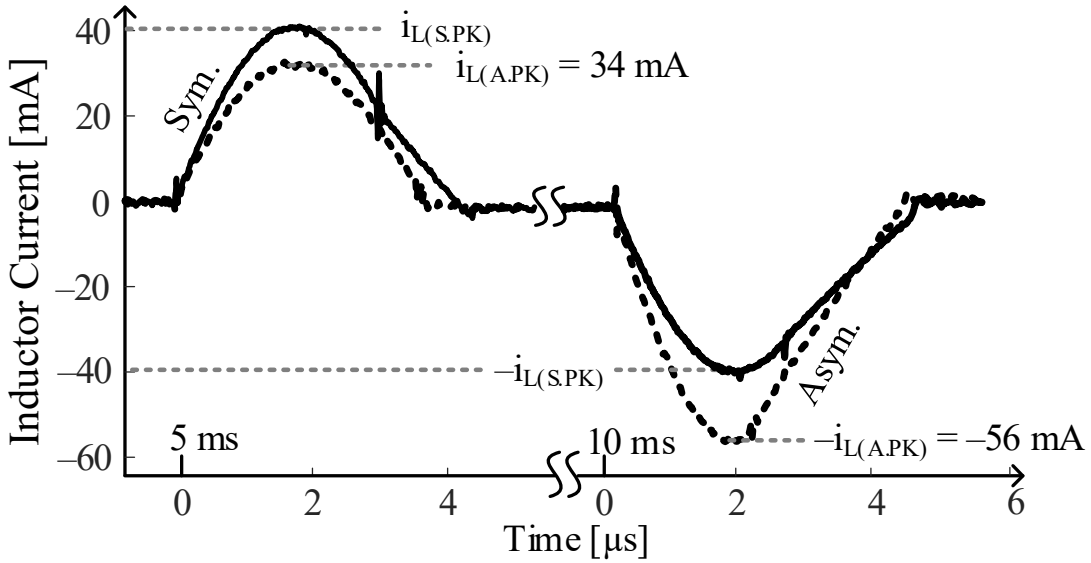

Energy Transfers

- **Indirect Transfers**
  - Operation
    - C_{PZ} energizes L_X for 0.25 t_{LC}
    - L_X then charges v_B
  - L_X: Draws and delivers all P_{PZ}

    ∴ High $i_{L(PK)}$ & transfer time t_X
  - Ohmic loss ∝ $i_{L(PK)}{}^2 t_X$
  - C_{PZ} never connects directly to v_B

    ∴ Indirect transfers

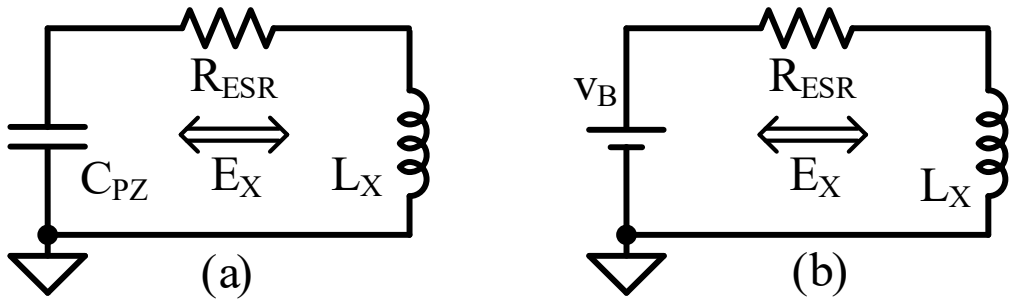

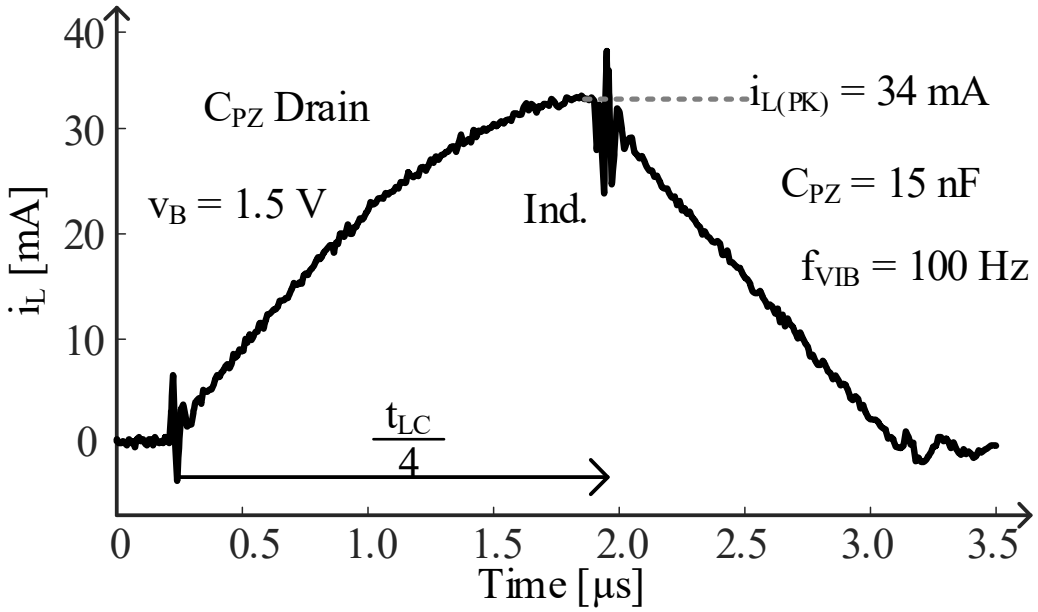

Energy Transfers

- **Indirect–Direct**
  - Operation
    - C_{PZ} energizes L_X for less than 0.25 t_{LC}
    - C_{PZ} and L_X then charge v_B

      v_{PZ} falls sinusoidally

      i_L also falls sinusoidally
  - L_X: steers energy it does not hold

    ∴ Lower $i_{L(PK)}$ & t_X → Lower loss
  - C_{PZ} directly charges v_B

    ∴ Indirect–direct transfers

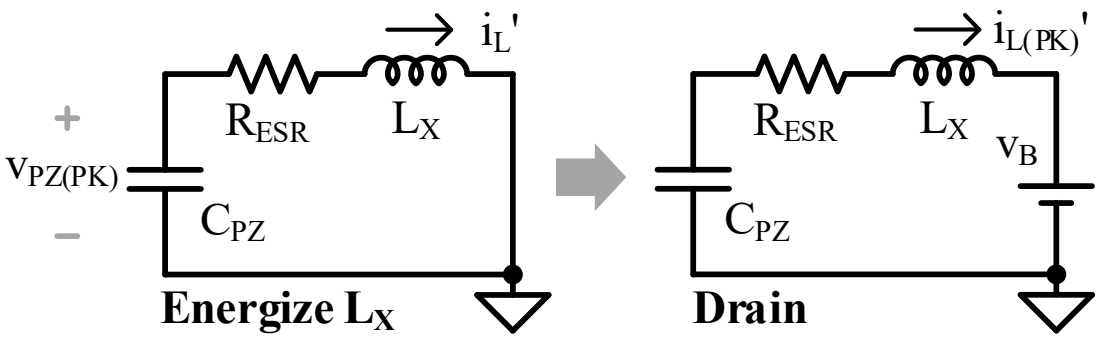

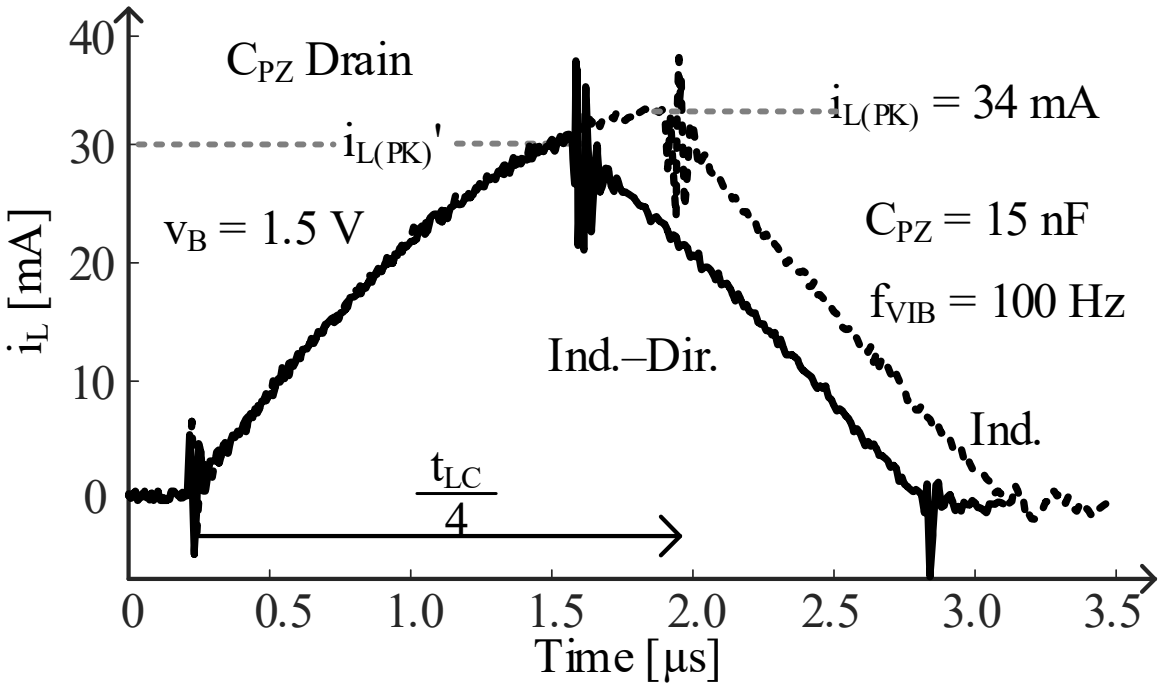

Energy Transfers

- **Indirect–Direct with PC**
  - Operation:
    - After draining C_{PZ}, negative pre-charge
    - v_B first directly charges C_{PZ} and L_X
    - L_X then drains into C_{PZ}
  - L_X: steers energy it does not hold

    ∴ Lower $i_{L(PK)}$ & t_X → Lower loss

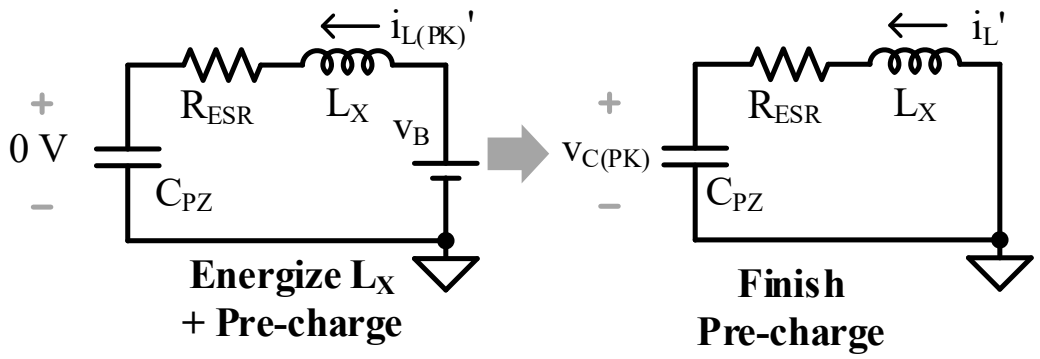

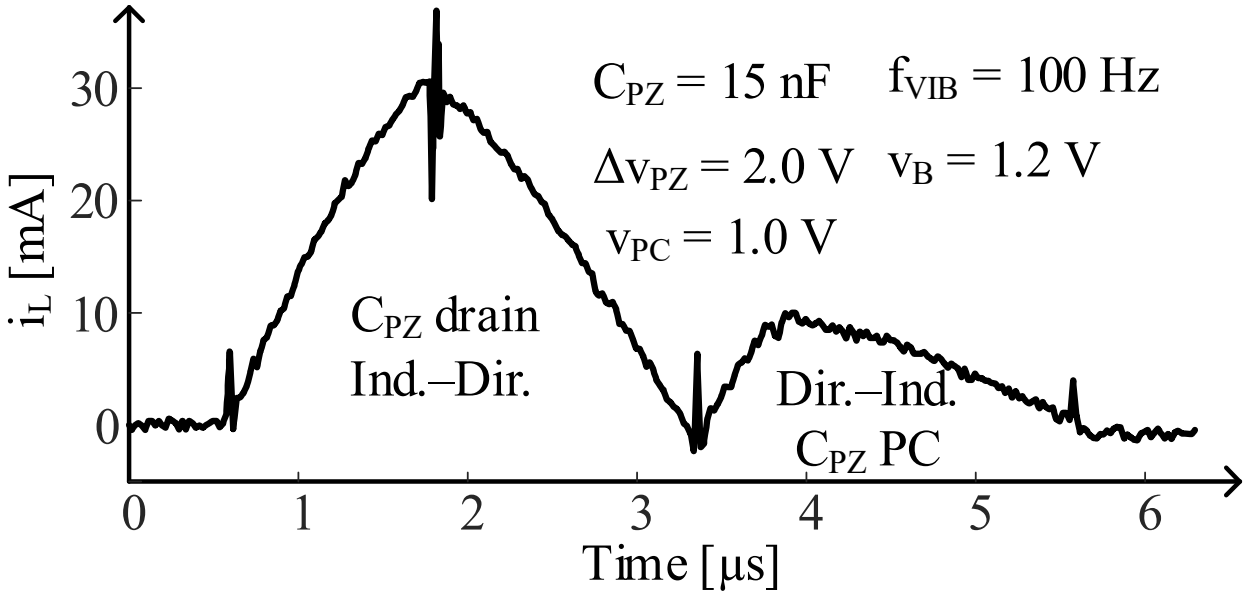

Energy Transfers

- **Direct–Indirect**
  - Operation:
    - C_{PZ} and L_X charge v_B until C_{PZ} drains
      v_{PZ} falls sinusoidally around v_B
      i_L increases then falls sinusoidally
    - L_X then charges v_B linearly
  - L_X: steers energy it does not hold
    ∴ Lower $i_{L(PK)}$ & transfer time
  - C_{PZ} directly charges v_B
    ∴ Indirect–direct transfers

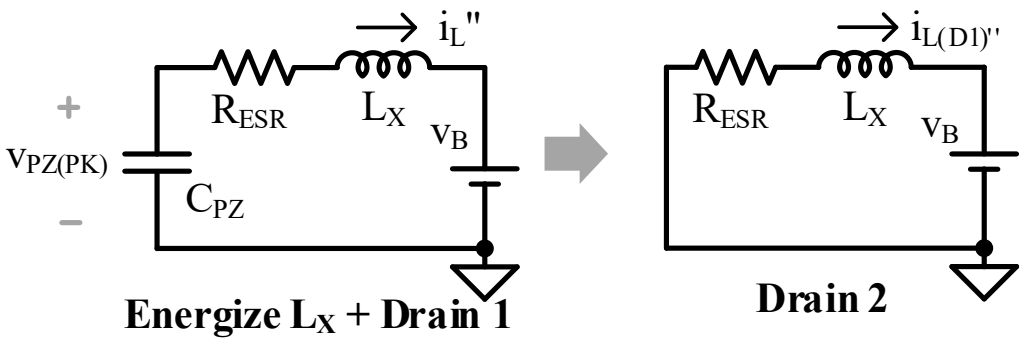

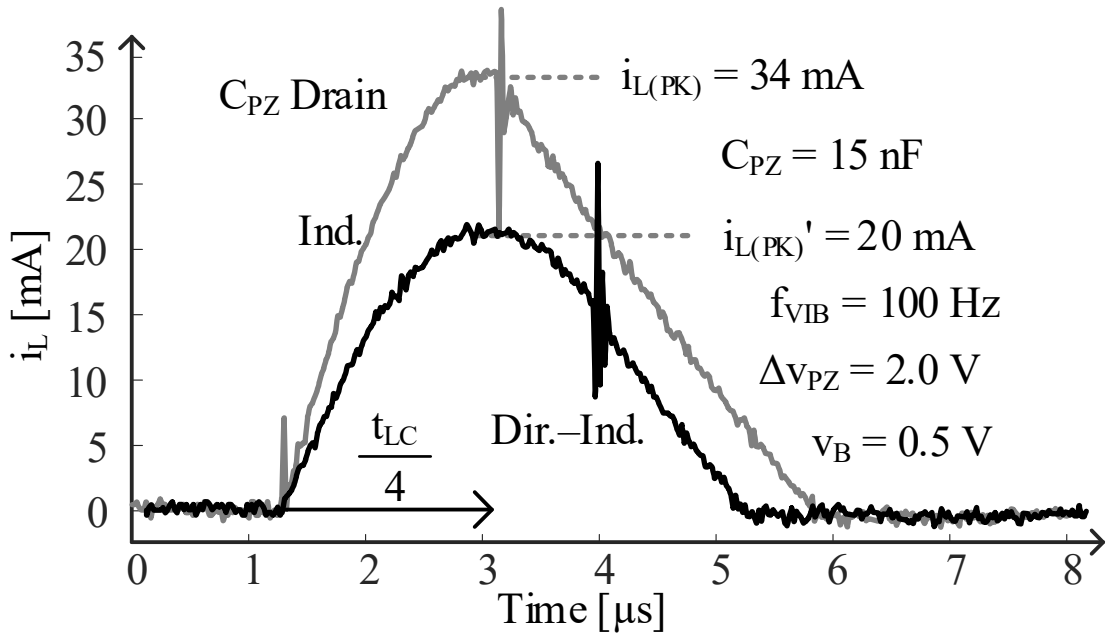

Energy Transfers

- **Direct–Indirect with PC**
  - Operation:
    - C_{PZ} and L_X charge v_B until C_{PZ} drains
    - L_X charges v_B, but stops before it drains
    - Remaining energy in L_X charges C_{PZ}
  - L_X: steers energy it does not hold

    ∴ Lower $i_{L(PK)}$ & t_X

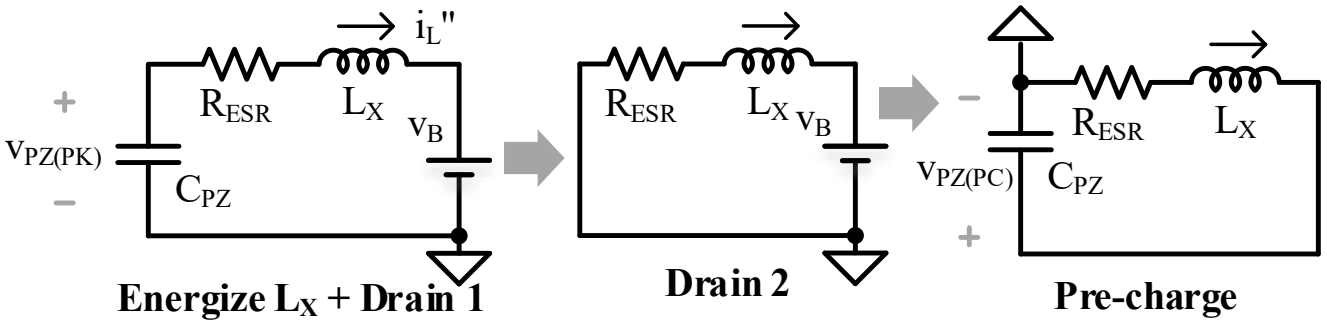

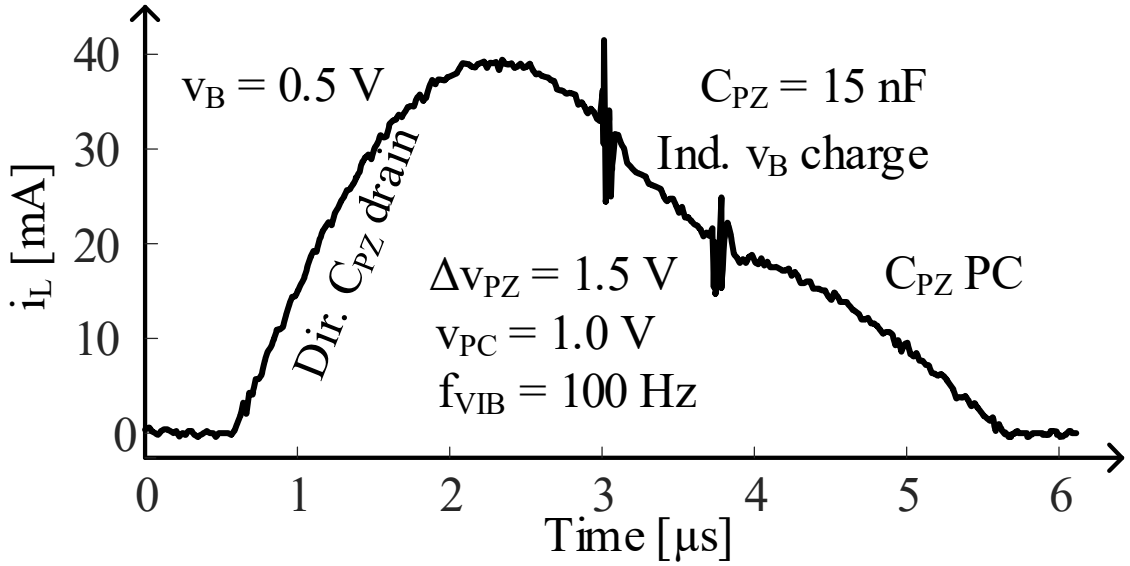

Output Power Comparison

- **Prototype**
  - Taped out using TSMC 180nm CMOS

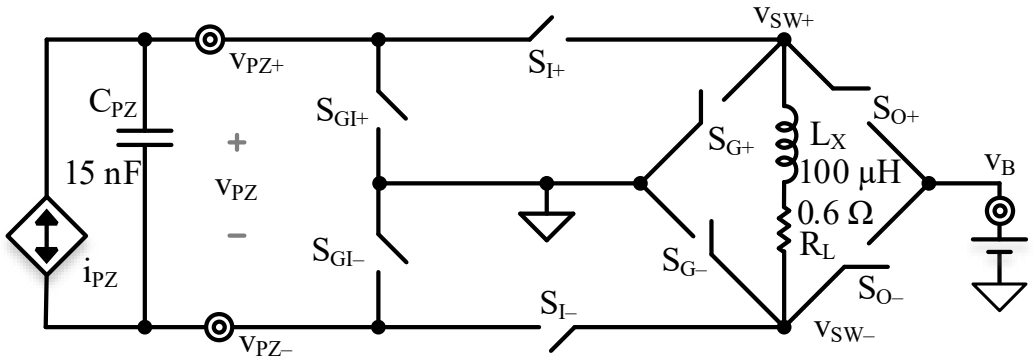

Switch	Type	L [nm]	W [mm]	R_{MIN} [Ω]
$S_{GI+/-}$	N	350	3.8	1.2
$S_{I+/-}$	N	350	3.2	1.1
	P	300	7.2	0.93
$S_{G+/-}$	N	350	2.2	0.82
$S_{O+/-}$	P	300	4.3	1.5

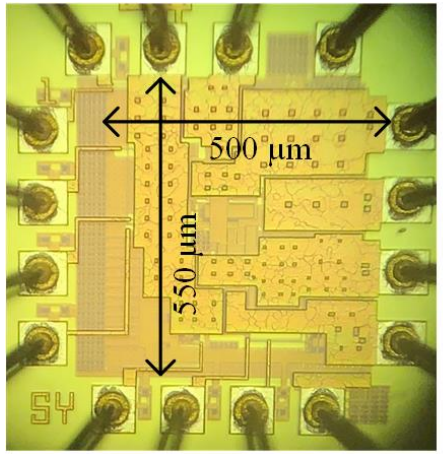

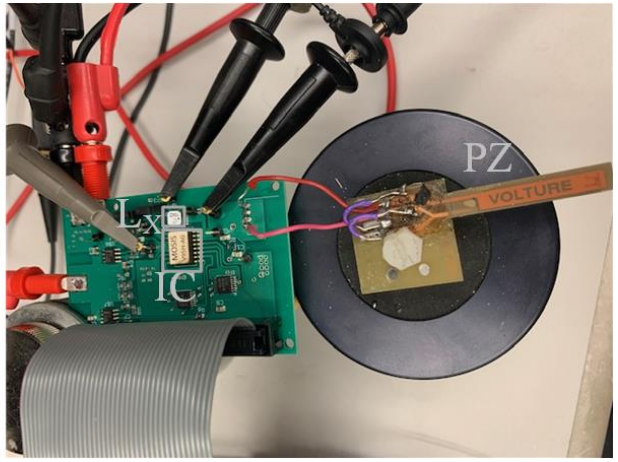

Output Power Comparison

- **In all modes, P_O is not sensitive to v_B**
  - No additional stage required
- **Pre-charging increases drawn power**
- **$P_{O(SYM)} > P_{O(ASYM)}$**
  - Lower ohmic loss because of lower peak current
  - Lower breakdown limit
- **$P_{O(DIR)} > P_{O(IND)}$**
  - Lower ohmic loss because of lower peak current
- **Symmetrical Direct Pre-Charge is the best**

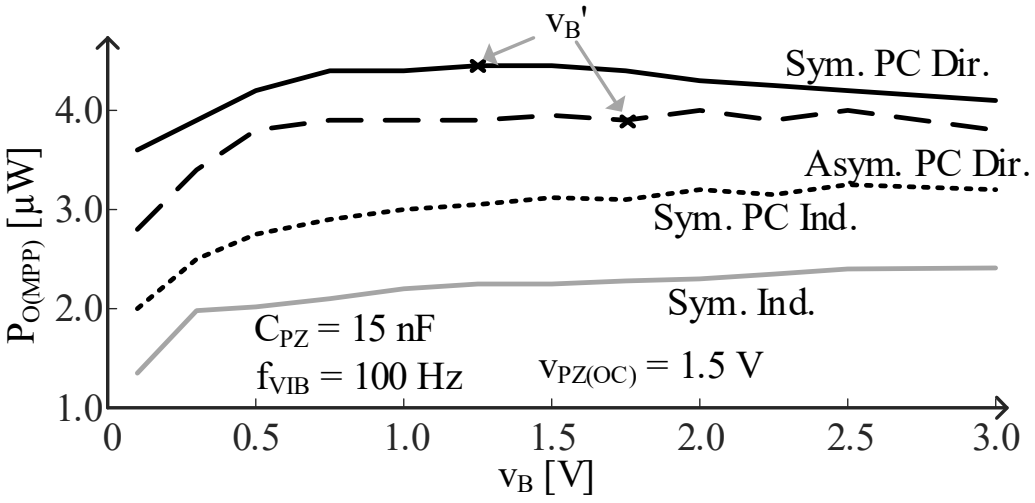

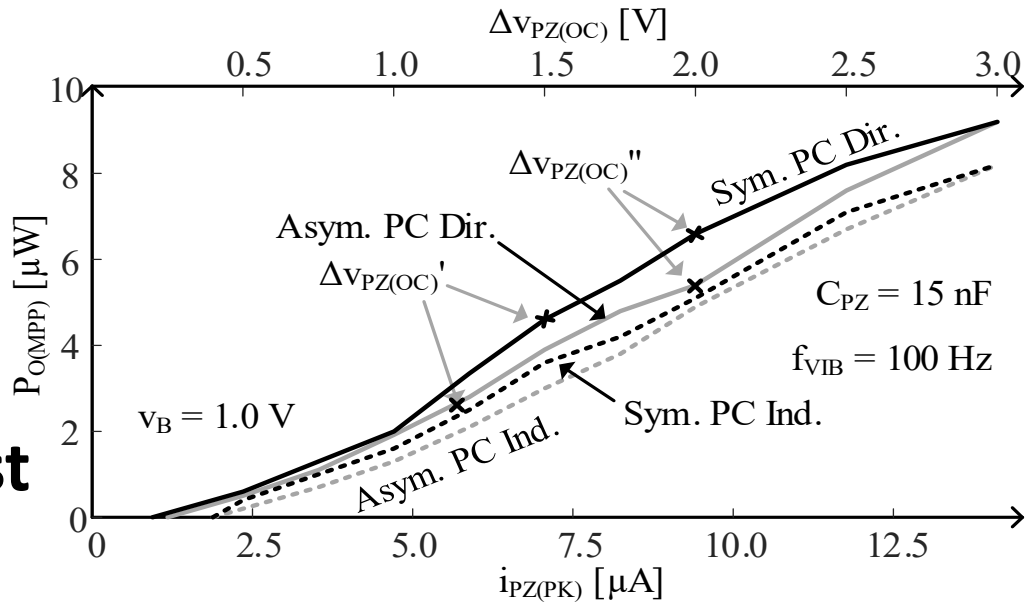

Output Power Comparison

	JSSC [11]	TPE [12]	JSSC [13]	This Work			
Mode	Asym. PC Ind.	Sym. PC Dir.	Sym. PC Ind.	Asym. PC Ind.	Sym. PC Ind.	Asym PC Dir.	Sym. PC Dir.
C_{PZ}	15 nF	17 nF	20 nF	15 nF	15 nF	15 nF	15 nF
f_{VIB}	143 Hz	120 Hz	140 Hz	100 Hz	100 Hz	100 Hz	100 Hz
$i_{PZ(PK)}$	8.2–36 µA	3.0–33 µA	11 µA	2.3 – 14 µA	1.8 – 14 µA	1.4 – 14 µA	0.9 – 14 µA
$\Delta v_{PZ(OC)}$	1.2–5.2 V	0.5–5.5 V	1.2	0.5–3.0 V	0.4–3.0 V	0.3–3.0 V	0.2–3.0 V
V_{BD}	15 V	5.5 V	> 7.0 V	3.0 V	3.0 V	3.0 V	3.0 V
L_X	330 µH	330 µH	340 µH	100 µH	100 µH	100 µH	100 µH
P_O	2.1–53 µW	0.7–49 µW	15 µW	0 – 7.9 µW	0 – 7.9 µW	0 – 9.1 µW	0 – 9.1 µW
η_O	2.6×–3.5×	3.2×–6.8×	14×	2.8×–6.6×	2.8×–7.2×	3.3×–10.5×	3.3×–15.5×

Conclusions

- Symmetrical pre-charge can output the most power
  - Symmetrical pre-charge has lower peak inductor current ∴ Lower loss
  - Asymmetrical reaches breakdown limit sooner ∴ Lower drawn power
  - Indirect transfer uses the inductor to transfer all energy ∴ High i_L, high loss
  - Direct transfers allows inductor to transfer more energy than it carries ∴ Lower i_L, lower ohmic loss
- Symmetrical pre-charge losses 20% less power.
- With more output power, charger avails microsystems more functions and longer life.

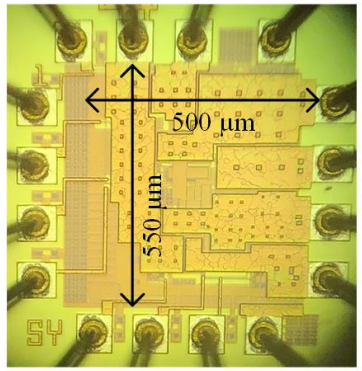

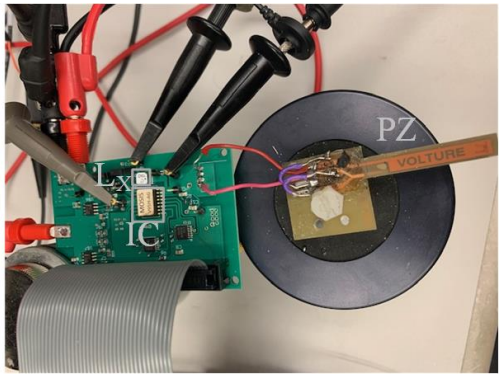

Q & A

Thanks a lot for your time and attention!

Any questions and/or comments?

References

- D. Puccinelli and M. Haenggi, “Wireless sensor networks: applications and challenges of ubiquitous sensing,” *IEEE Circuits and Syst. Mag.*, vol. 3, no. 3, pp. 19–29, 2005.
- S. Roundy, P.K. Wright, and J. Rabaey, “A study of low level vibrations as a power source for wireless sensor nodes,” *Comput. Commun.*, vol. 26, no. 11, pp. 1131–1144, Jul. 2003.
- S. Suduvalayam and P. Kulkarni, “Energy harvesting sensor nodes: Survey and implications,” *IEEE Commun. Surveys Tut.*, vol. 13, no. 3, pp. 443–543 461, Jul.–Sep. 2011.
- A. B. A. Dow, A. Bittner, U. Schmid, and N.P. Kherani, “Design, fabrication and testing of a piezoelectric energy microgenerator,” *Microsyst. Tech.*, vol. 20, no. 4–5, pp. 1035–1040, Apr. 2014.
- A. Hajati and S.G. Kim, “Ultra-wide bandwidth piezoelectric energy harvesting,”, *Applied Phys. Letters*, vol. 99, no. 8, Aug. 2011.
- J. Liu, H. Fang, Z. Xu, X. Mao, X. Shen, D. Chen, H. Liao, and B. Cai, “A MEMS-based piezoelectric power generator array for vibration energy harvesting”, *Microelectronics J.*, vol. 39, no. 5, pp. 802–806, May 2008.
- G.A. Rincón-Mora and S. Yang, “Tiny piezoelectric harvesters: Principles, constraints, and power conversion,” *IEEE Trans. on Circuits Syst. I*, vol. 63, no. 5, pp. 639–649, May 2016.
- Y.K. Ramadass and A.P. Chandrakasan, “An efficient piezoelectric energy harvesting interface circuit using a bias-flip rectifier and shared inductor,” *IEEE J. of Solid-State Circuits*, vol. 45, no. 1, pp. 189–204, Jan. 2010.
- Y.C. Chu, I. C. Lien, and W.J. Wu, “An improved analysis of the SSHI interface in piezoelectric energy harvesting,” *Smart Mater. Struct*., vol. 16, no. 6, pp. 2253–2264, Oct. 2007.
- S. Yang and G.A. Rincón-Mora, “Energy-harvesting piezoelectric-powered CMOS series switched-inductor bridge”, *IEEE Trans. on Power Electronics*, vol. 34, no. 7, pp. 6489–6497, July 2019.
- D. Kwon and G.A. Rincón-Mora, “A single-inductor 0.35-µm CMOS energy-investing piezoelectric harvester,” *IEEE J. of Solid-State Circuits*, vol. 49, no. 10. pp. 2277–2291, Oct. 2014.
- K.S. Yoon, S.W. Hong, and G.H. Cho, “Double pile-up resonance energy harvesting circuit for piezoelectric and thermoelectric materials”, *IEEE J. of Solid-State Circuits*, vol. 53, no. 4, pp. 1049–1060, Apr. 2018.
- G. K. Ottman, H. F. Hofmann, A. C. Bhatt, and G. A. Lesieutre,“Adaptive piezoelectric energy harvesting circuit for wireless remotepower supply,” *IEEE Trans. Power Electron*., vol. 17, no. 5,pp. 669–676, Sep. 2002.
- A. Tabesh and l.C. Grechette, “a low-power stand-alone adaptive circuit for harvesting energy from a piezoelectric micropower generator”, *IEEE Trans. Industrial Electronics*, vol. 57, no. 3, pp. 840–849, Mar. 2010.
- S. Yang and G.A. Rincón-Mora, “Least lossy piezoelectric energy-harvesting charger”, *in proc. IEEE International Midwest Cir. Syst.*, Dallas, TX, Aug. 2019.