Power Electronic Circuits for Vibration-Based Energy Harvesting using Piezoelectric Devices

Heath Hofmann
Associate Professor
Department of Electrical Engineering and Computer Science
The University of Michigan

Overview

- Energy Harvesting From Quasi-Static Devices
  - Rectifier-Based Circuits
  - Synchronized Switch Harvesting on Inductor (SSHI)
  - Active Energy Harvesting Circuit
- Energy Harvesting From Resonant Devices
  - Impedance Matching Theory
  - Active Energy Harvesting Implementation
- Conclusions

Quasi-Static Piezoelectric Device

$$Q = CV + dF \qquad x = dV + \frac{1}{k}F$$

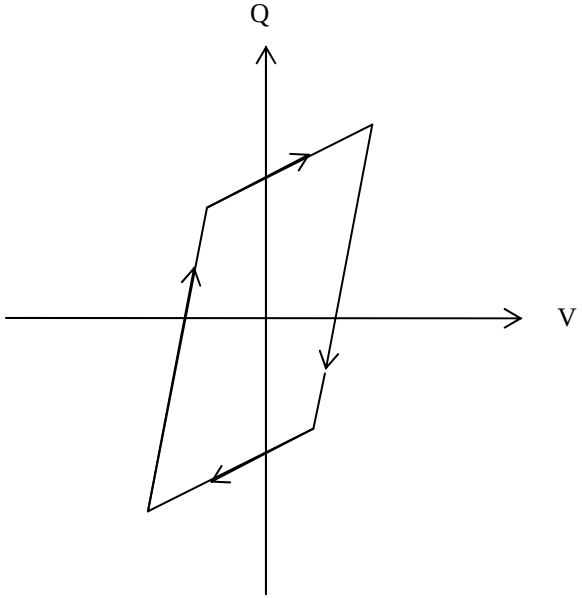

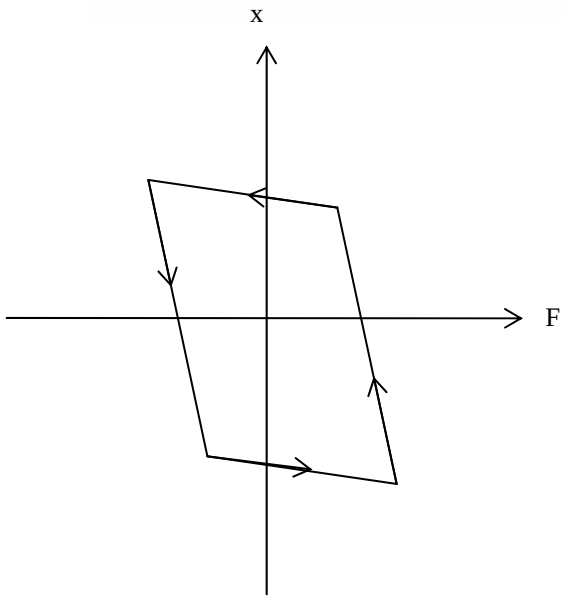

Energy harvested per mechanical excitation cycle:

$$W_{conv} = \oint Q dv = \oint F dx$$

Rectifier-Based Quasi-Static Energy Harvesting

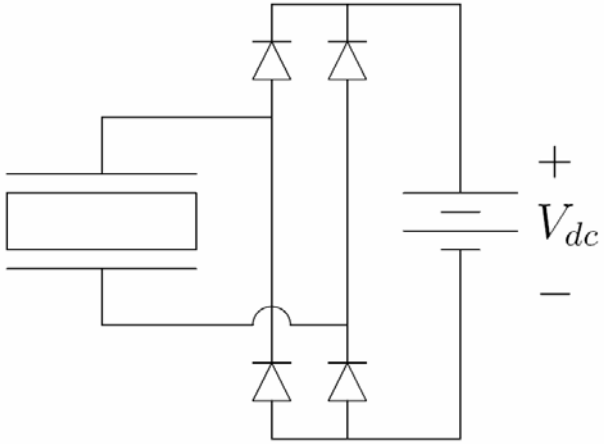

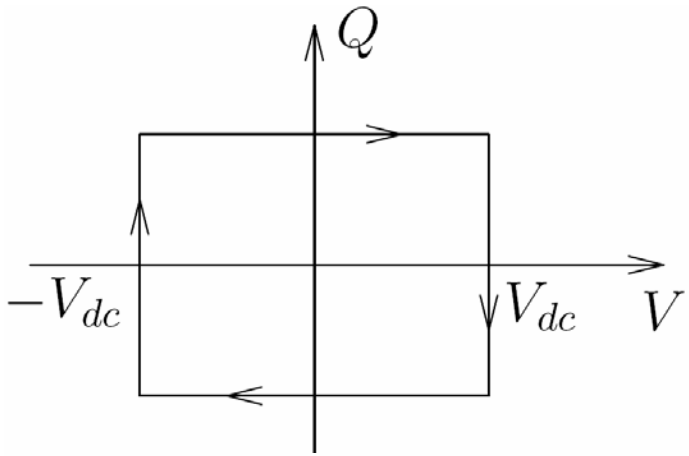

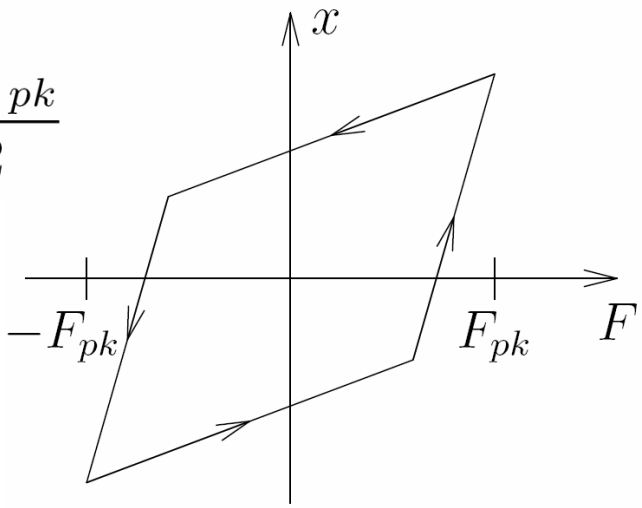

Optimal DC Voltage: $V_{dc\,opt} = \dfrac{dF_{pk}}{2C} = \dfrac{V_{oc\,pk}}{2}$

Resulting Energy Harvested Per Cycle:

$$W = \frac{d^2 F_{pk}^2}{C} = CV_{oc\,pk}^2$$

G.K. Ottman*, H.F. Hofmann, A.C. Bhatt, G.A. Lesieutre. “Adaptive Piezoelectric Energy Harvesting Circuit for Wireless Remote Power Supply”, *IEEE Transactions on Power Electronics*, Sept. 2002, vol. 17, issue 5, pp. 669-676.

Piezoelectric Energy Harvesting Circuit

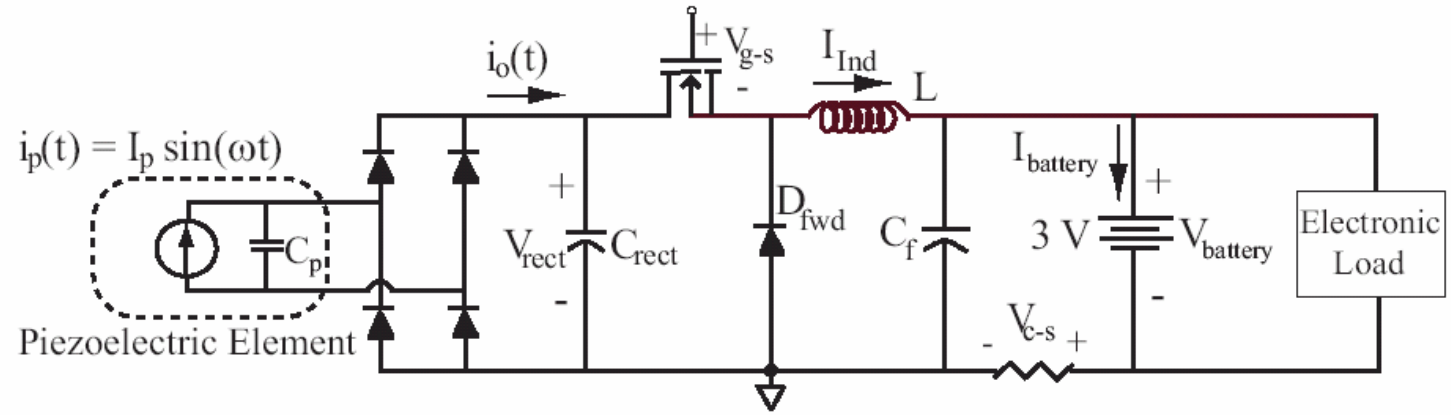

- A DC-DC converter operating in discontinuous conduction mode can implement optimal operating point with relatively simple circuitry.

$$D_{opt} = \sqrt{\frac{4V_{rect}\omega L C_p f_s}{\pi\left(V_{rect} - V_{battery}\right)}}$$

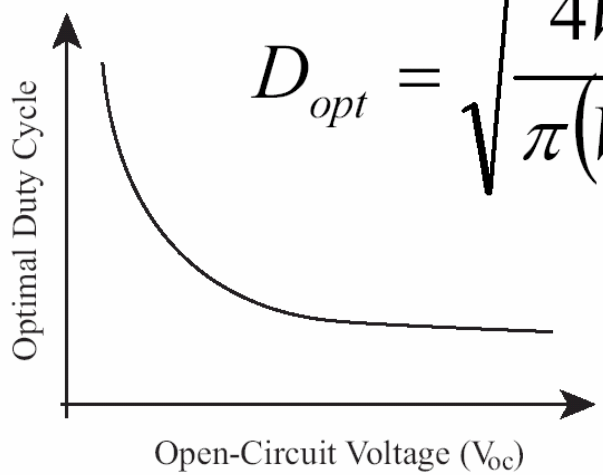

G.K. Ottman*, H. F. Hofmann, G.A. Lesieutre. "Optimized Piezoelectric Energy Harvesting Using Step-Down Converter in Discontinuous Conduction Mode", *IEEE Transactions on Power Electronics*, March 2003, vol. 18, issue 2, pp. 696-703.

Parallel Synchronized Switch Harvesting on Inductor (SSHI)

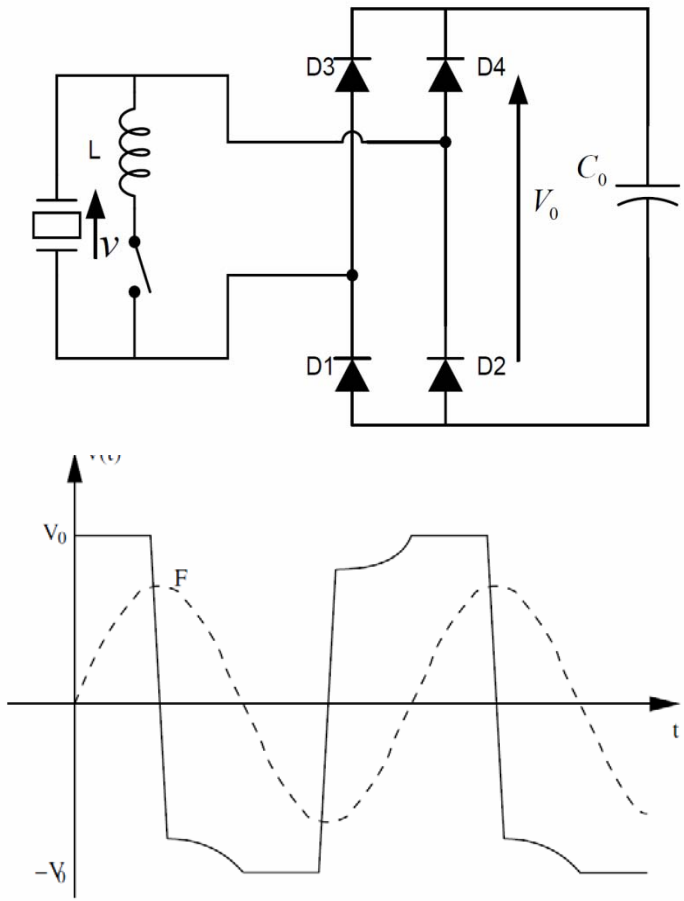

- Switch closed at peak of applied force
- Voltage across device is inverted during LC transient
- After transient, applied force increases voltage across device until it equals V_0. At this point, energy harvesting occurs.

D. Guyomar, A. Badel, E. Lefeuvre, and C. Richard, "Towards energy harvesting using active materials and conversion improvement by nonlinear processing," IEEE Trans. Ultrason., Ferroelect., Freq. Contr., vol. 52, pp. 584–595, 2005

Active Energy Harvesting

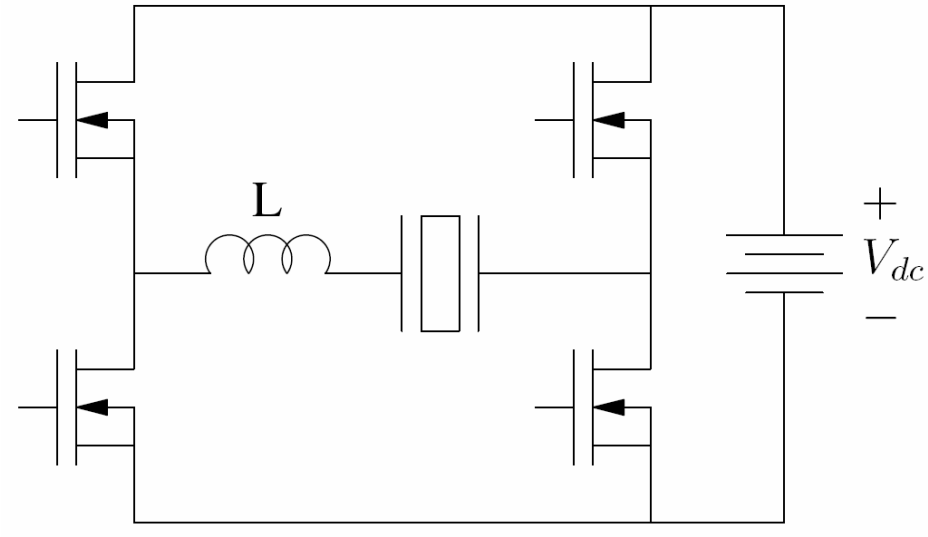

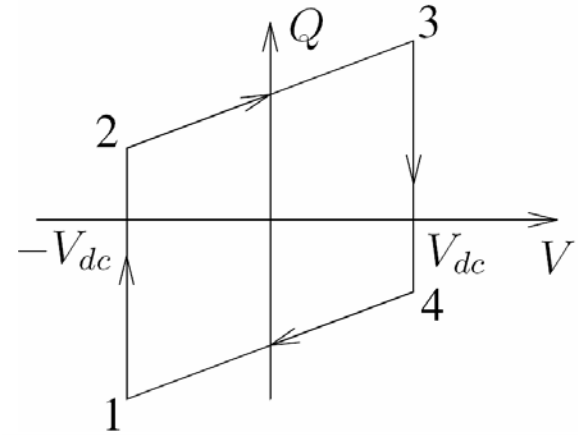

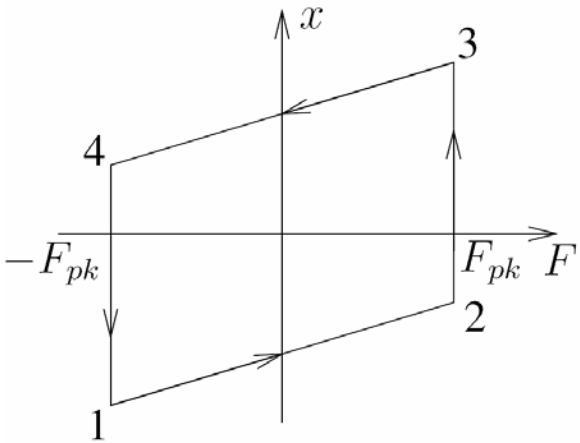

Energy Harvested Per Cycle:

$$W = 4dF_{pk}V_{dc}$$

Y. Liu*, G.Tian*, Y. Wang, J. Lin, Q. Zhang, H. F. Hofmann. "Active Piezoelectric Energy Harvesting: General Principle and Experimental Demonstration", *Journal of Intelligent Material Systems and Structures*, Vol. 20, Mar. 2009, pp. 575-585.

Active Energy Harvesting Implementation, Waveforms

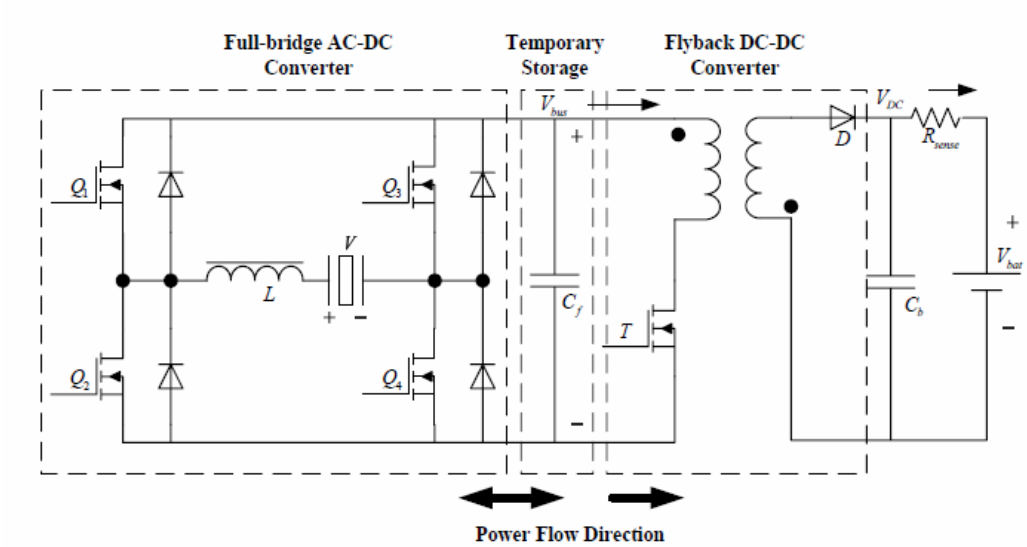

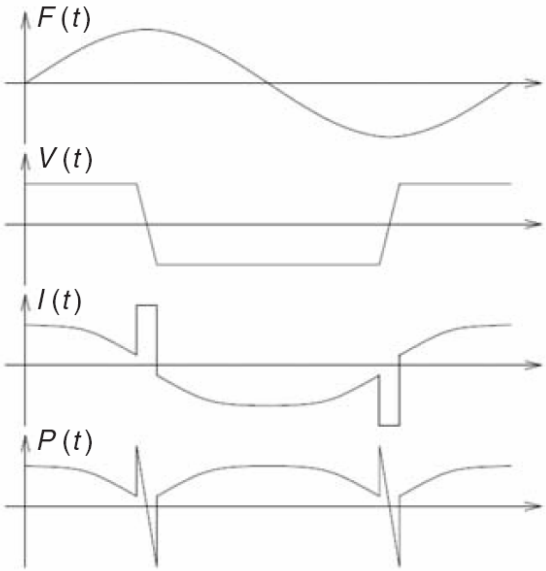

- Voltage actively inverted by circuitry at force peak using Pulse-Width Modulation (PWM)
- Transistors held open or closed for remainder of time
  - Minimizes switching losses
- Flyback converter used to control DC bus voltage of full-bridge

Active Energy Harvesting Implementation: Multilayer PVDF Polymer Piezoelectric Device

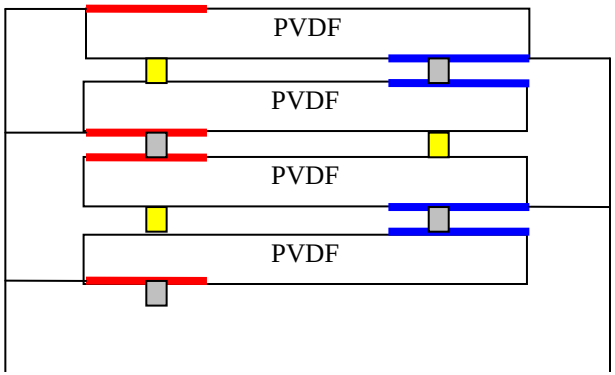

	d_{31} (pC/N)	ε_{33} (ε_0)	Y (GPa)	k_{31}
24 μm PVDF	21	11.6	2.9	0.11

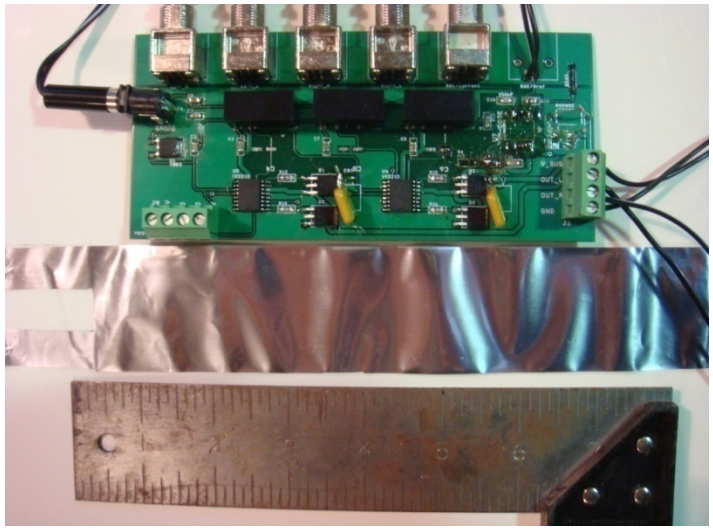

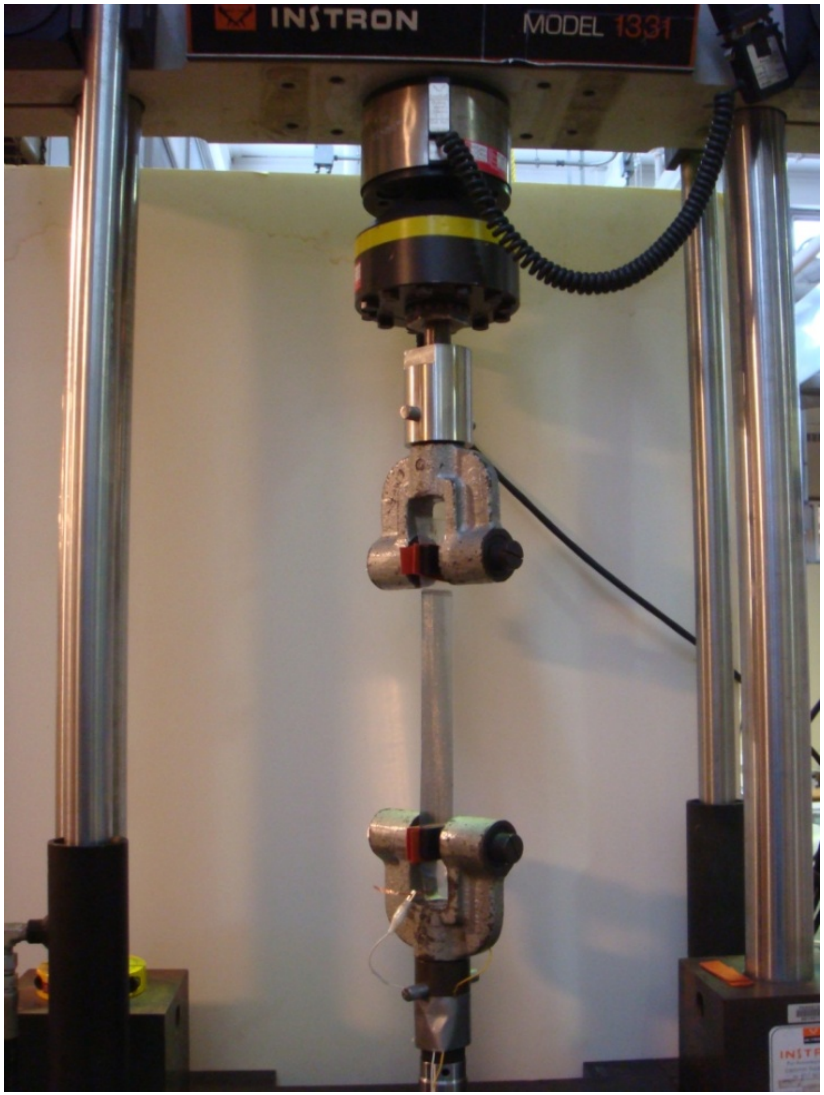

Active Energy Harvesting: Experimental Results

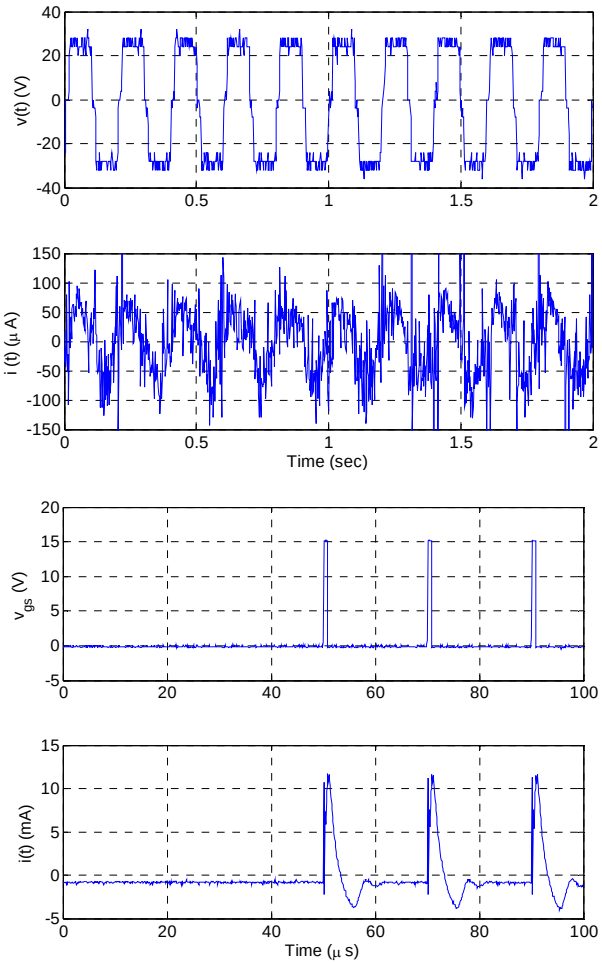

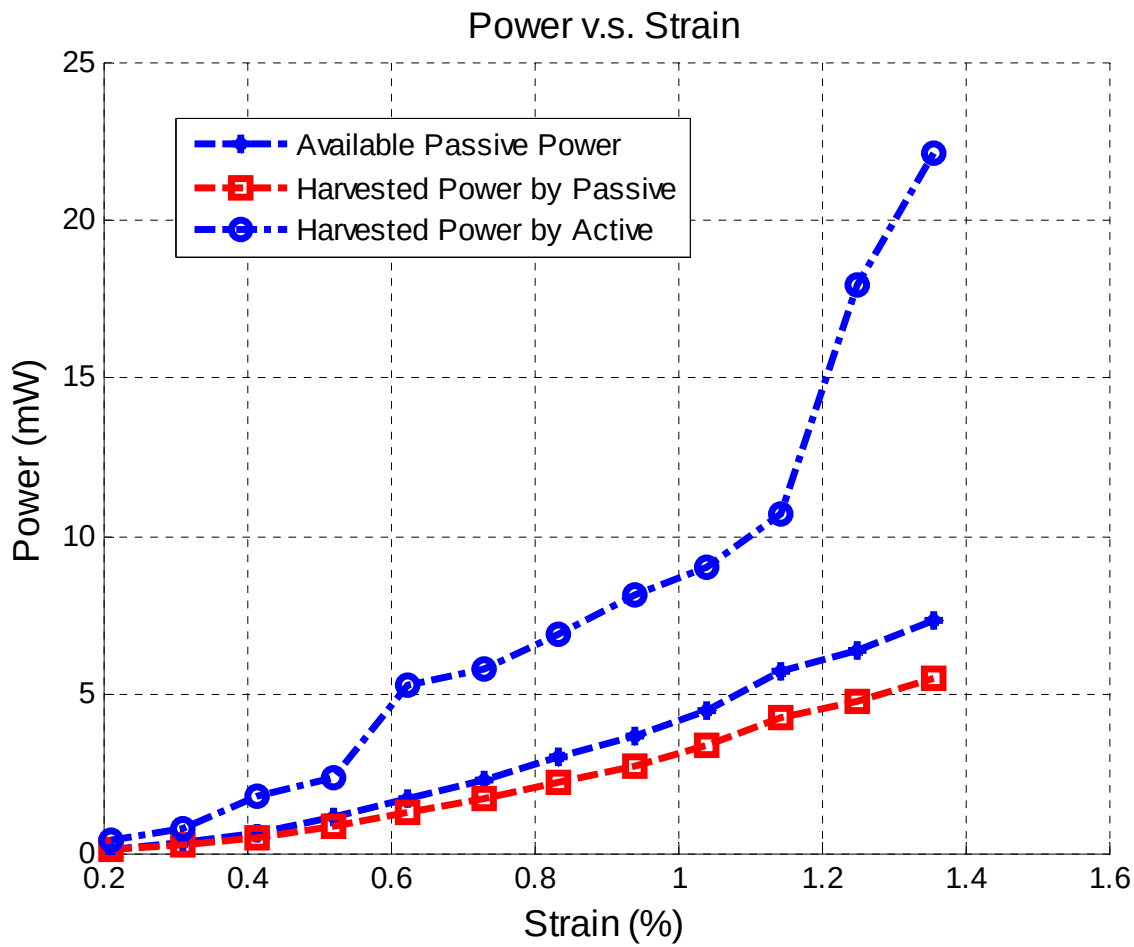

Y. Liu*, G.Tian*, Y. Wang, J. Lin, Q. Zhang, H. F. Hofmann. "Active Piezoelectric Energy Harvesting: General Principle and Experimental Demonstration", *Journal of Intelligent Material Systems and Structures*, Vol. 20, Mar. 2009, pp. 575-585.

Pros and Cons of SSHI vs. Active Energy Harvesting

- SSHI:
  - Pro: Simple control
  - Con: Either significant conduction loss occurs during LC transient, or a physically large inductor is required
- Active:
  - Pro: Pulse-Width Modulation of transistors limits current, hence conduction loss, during voltage transient
  - Con: Circuit complexity, switching loss

Maximum Power Harvested

Parallel SSHI	Active Energy Harvesting
$\frac{\omega C V_{OC}^2}{\pi(1-e^{\frac{-\pi}{2Q_f}})}$	$\frac{\eta^3}{1-\eta^2}\frac{2\omega C V_{OC}^2}{\pi}$

- Harvested power with SSHI techniques becomes arbitrarily large as quality factor $Q_f \to \infty$
- Harvested power with active technique becomes arbitrarily large as circuit efficiency $\eta \to 100\%$

Resonant Energy Harvesting Devices

- Often a mechanical spring-mass resonant structure is incorporated into the energy harvesting device to amplify the vibrations and therefore increase the amount of energy harvested.
- Useful when mechanical excitation frequency is known

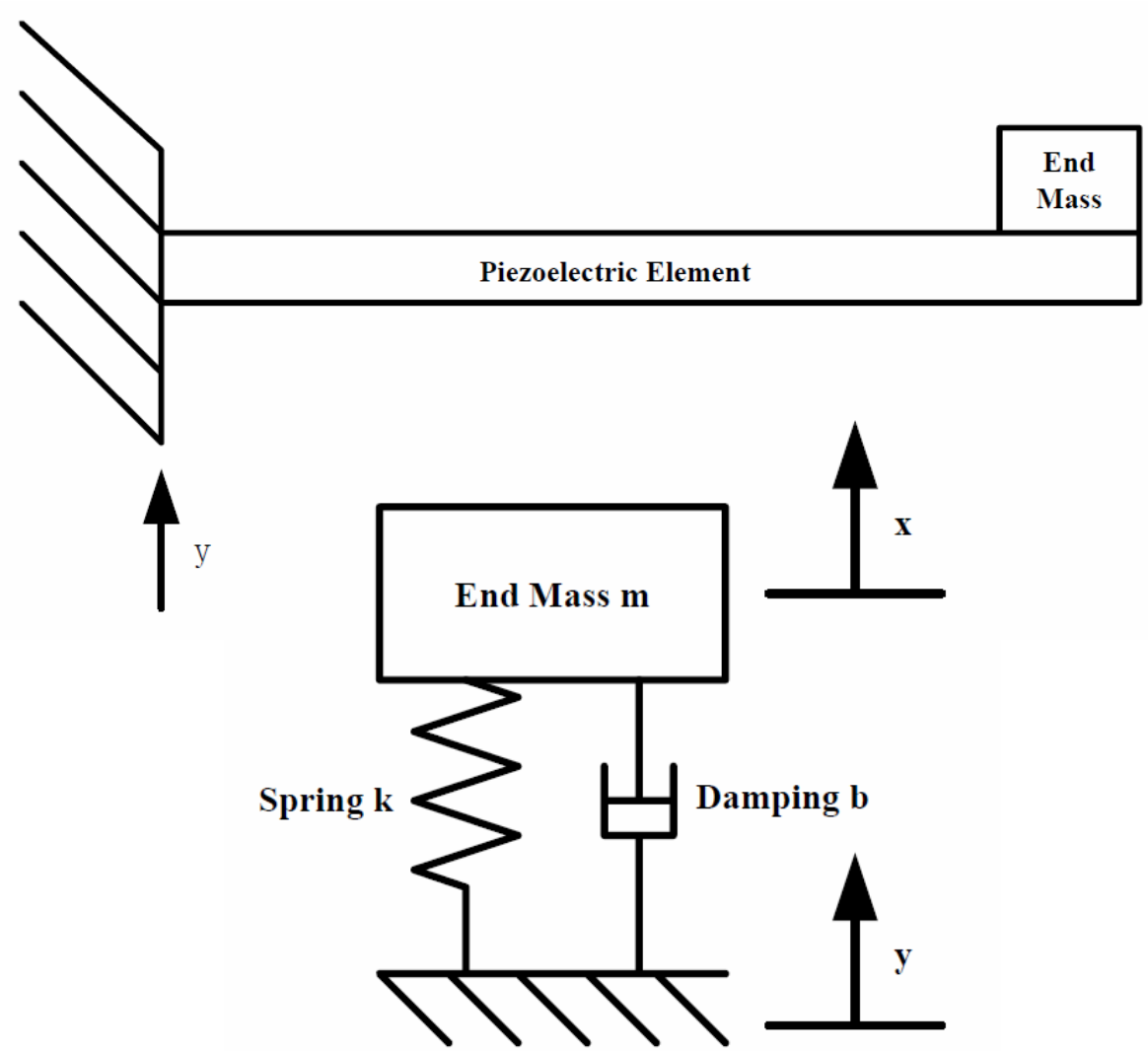

Application: Wireless Sensor Networks

- Wireless sensor system developed in collaboration with KCF Technologies, Inc, through a DOE-sponsored STTR project
- Monitors temperature, acceleration, and pressure
- Power harvester generates 4mW of power at 1mm/sec, 360Hz excitation
- Operates continuously without need of battery replacement for up to 15 years

Size: Ø63 x 67 mm cylinder

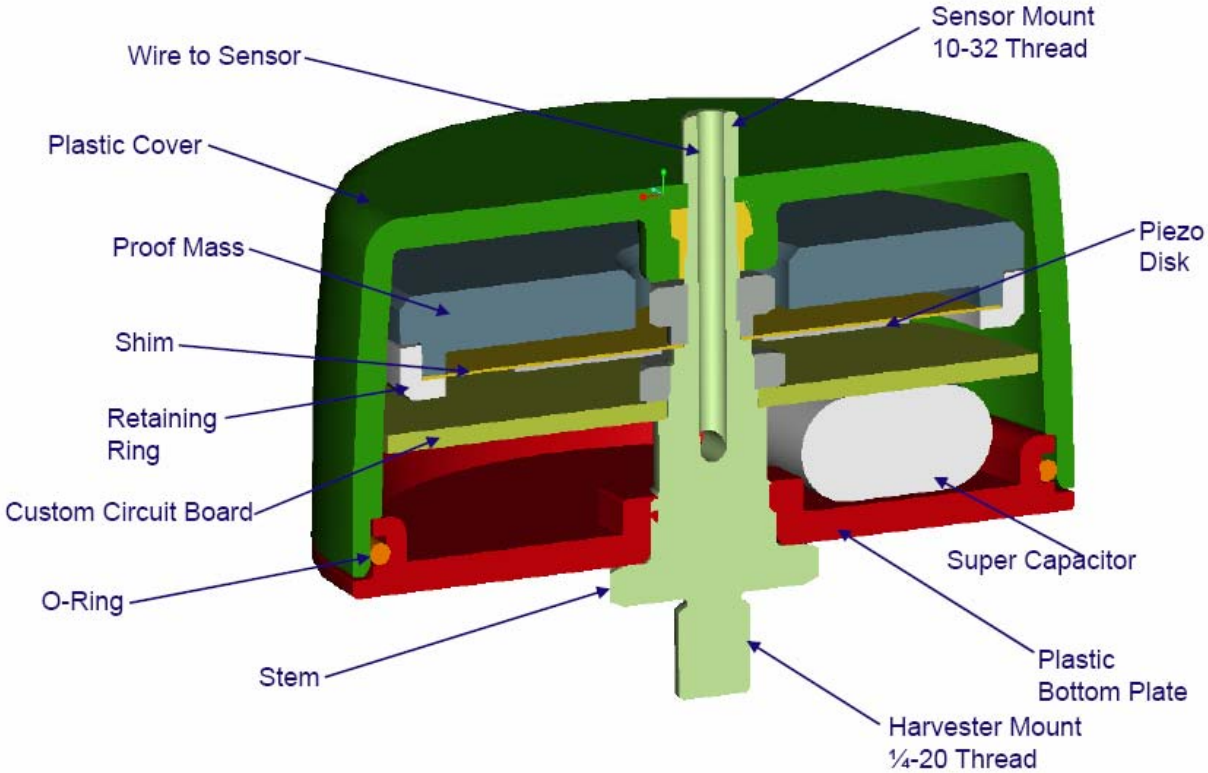

Issues With Resonant Devices

- The amount of power harvested by rectifier-based circuits can decrease substantially if the vibration frequency deviates even slightly from the mechanical resonance frequency.
- Even if the vibration frequency is well known, deviations in mechanical parameters and tolerances can make it difficult to design a mechanical resonance frequency with a high degree of accuracy.

Resonant Circuit Model

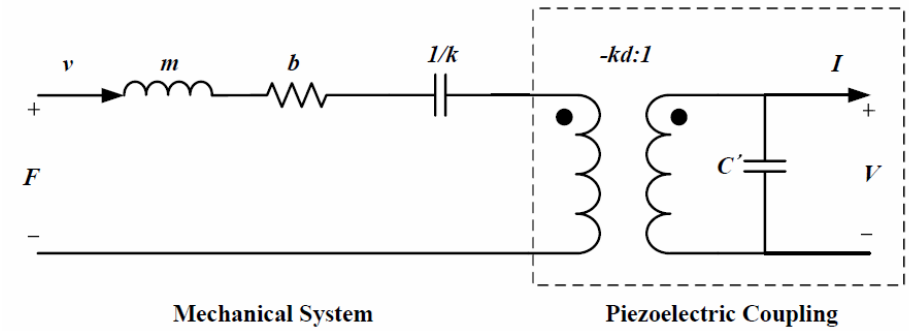

- Assuming sinusoidal excitation force with magnitude F_m and frequency ω, the mechanical source impedance is given by

$$\tilde{Z}_m = b + j(\omega m - \frac{k}{\omega})$$

- The load maximizing power extracted from the mechanical system corresponds to the complex conjugate of the mechanical source impedance:

$$\tilde{Z}_l = b + j(\frac{k}{\omega} - \omega m)$$

- The harvested power under optimal loading is given by

$$P_{max} = \frac{F_m^2}{8b}$$

Optimal Control Voltage

- Realization of the optimal electrical impedance can be implemented by applying the corresponding voltage at the device's terminal.
- The optimal control voltage is given by

$$\tilde{V}_{opt} = \frac{-\omega b - j(k - \omega^2 m)}{2kd\omega b}\tilde{F}$$

- Optimal voltage magnitude and phase:

$$V_{mag} = \sqrt{\omega^2 b^2 + (k - \omega^2 m)^2}\frac{F_m}{2kd\omega b}$$

$$\phi = 180 - arctan(\frac{k - \omega^2 m}{\omega b})$$

Maximum Harvested Power for Different Circuit Efficiencies

- Losses in power electronic circuitry result in lower power harvesting; the effect is more obvious at off-resonance frequencies, wher the circuit is processing more reactive power

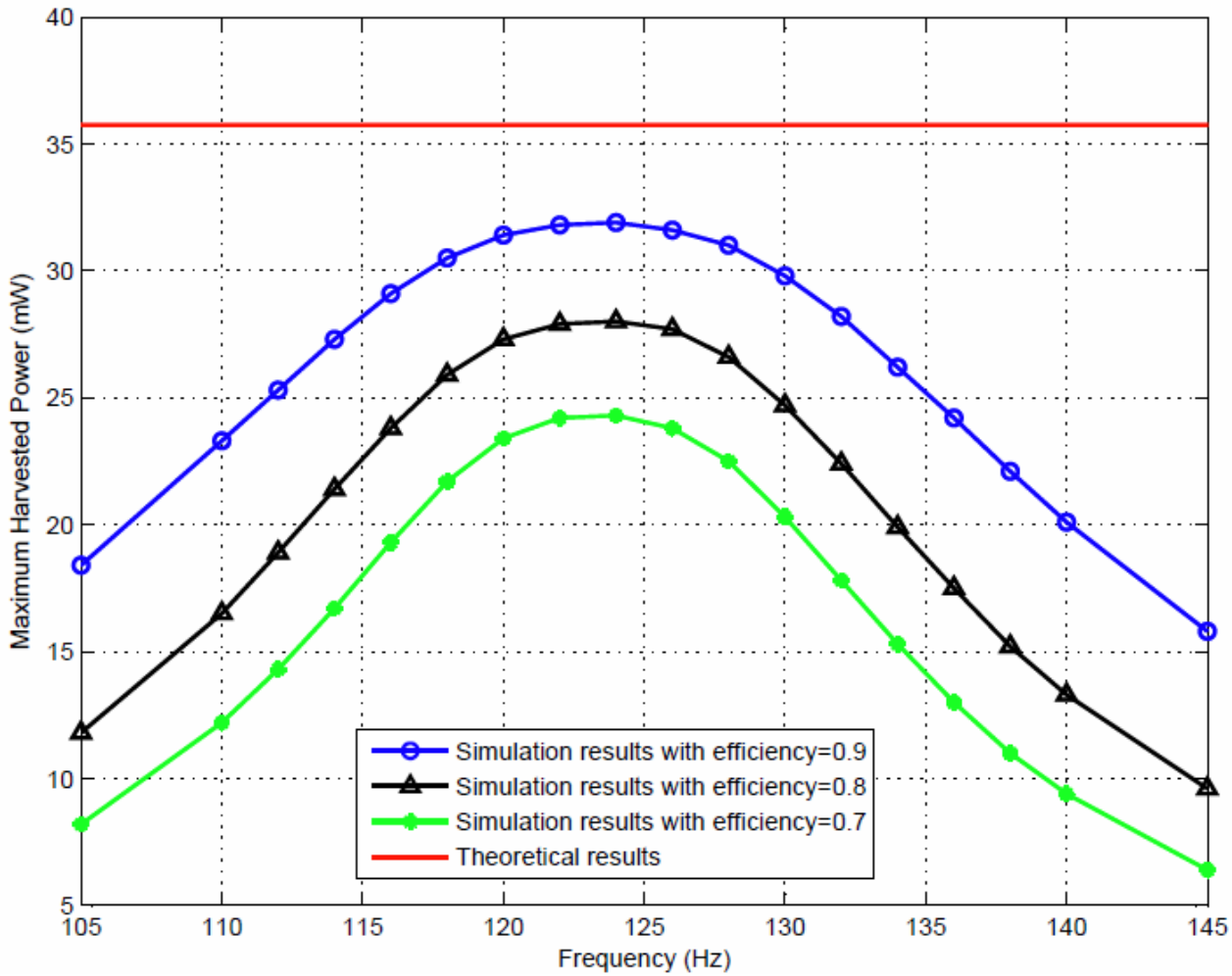

Effective Impedance Matching with Active Energy Harvesting

- The generation of a sinusoidal voltage across the device using a switchmode circuit requires continuous switching of the transistors (inefficient).
- We instead apply the active energy harvesting approach, which only requires switching at the voltage transitions
- Basic idea is to apply a square-wave voltage to device whose fundamental frequency component magnitude and phase corresponds to optimal values
- Magnitude and phase of applied voltage determined adaptively to maximize power extracted

Experimental Setup

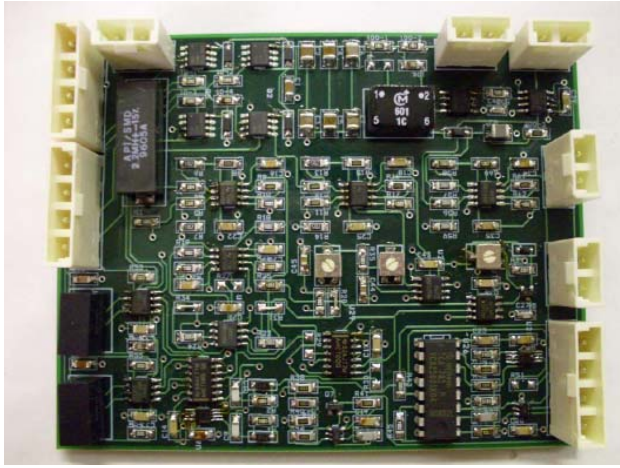

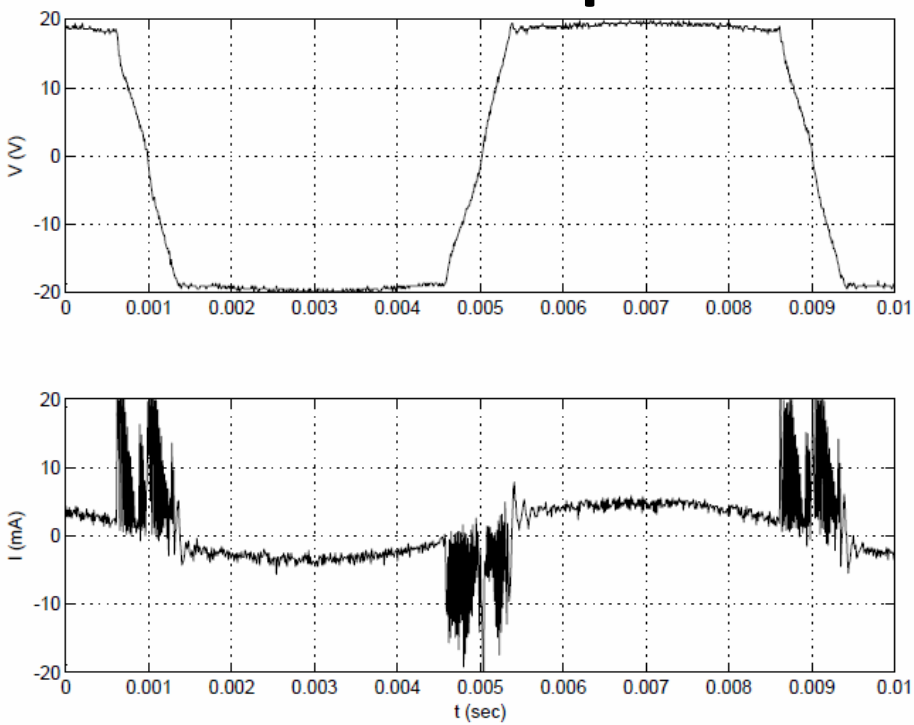

- Bimorph cantilever-beam actuator consisting of Mide QuickPack® device with aluminum proof mass
- Accelerometer attached to proof mass to provide reference signal for phase control
- In the following experiments, power for the control and gate drive circuitry was provided by an external power supply.

Experimental Energy Harvesting Comparison

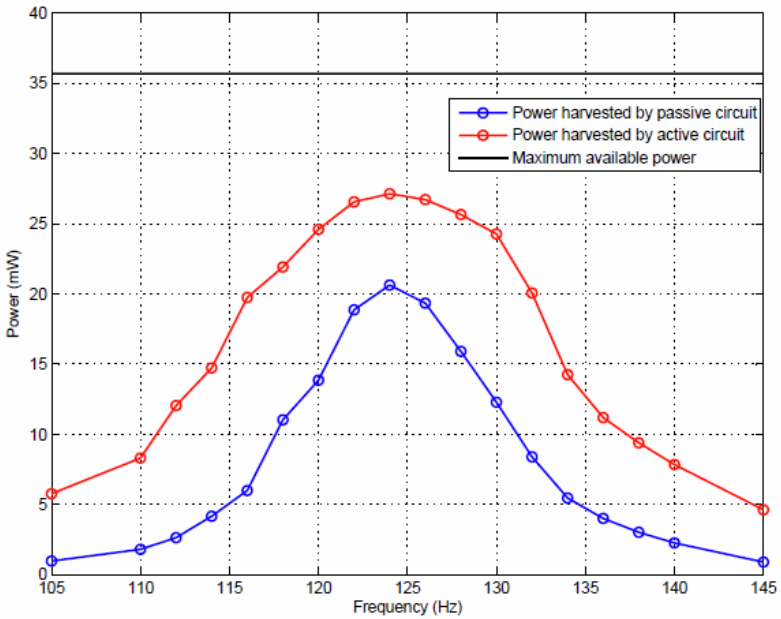

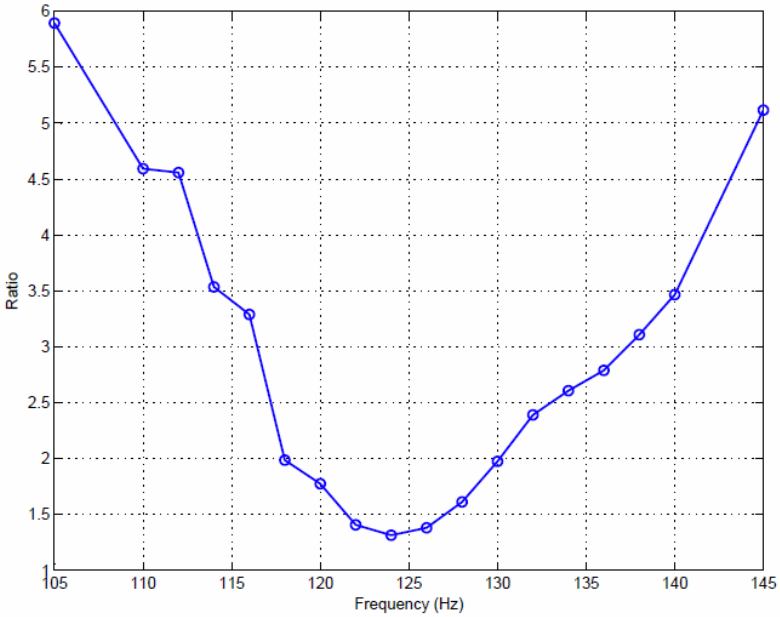

- At 124Hz, active provides **27mW**, passive (rectifier) provides **21mW**
- At 120Hz, active provides **25mW**, passive provides **14mW**
- Passive bandwidth: **7Hz** Active bandwidth: **17Hz**

C. Luo*, H.F. Hofmann. "Wideband energy harvesting for resonant piezoelectric devices", Proceedings of the 2010 IEEE Energy Conversion Congress and Exposition, Sept. 12-16, Atlanta, GA, pp. 4171-4178.

Conclusions

- In quasi-static applications, SSHI and Active Energy Harvesting can generate significantly more power than rectifier-based techniques
- In resonant applications, Active Energy Harvesting can significantly extend the frequency range over which a substantial amount of power can be harvested.

Acknowledgements

DEPARTMENT OF ENERGY
UNITED STATES OF AMERICA

NSF

DEPARTMENT OF THE NAVY
USN
ONR
Science & Technology

NAVAL UNDERSEA WARFARE CENTER
NUWC