WÜRTH ELEKTRONIK

Aluminum Electrolytic vs. Aluminum Polymer Capacitor

APEC 2018 in San Antonio
Industry Session

Frank Puhane

Technical Engineering
Team leader

Short Introduction of Today‘s Presenter

Frank Puhane

Technical Project Engineer &
Team Leader Technical Engineering
eiCap Capacitor Division

+49 7942945 4033

frank.puhane@we-online.com

www.we-online.com

Background:

- More than 10 years of work experience in electronics industry
- Background in Electronics, Power Supply Development and formerly worked as Field Application Engineer
- In charge for technical product services and application support of capacitor division at WE

Agenda

- **Overview about Technologies**
- **Influence of Input Capacitor**
- **Influence of Output Capacitor**

OVERVIEW ABOUT TECHNOLOGIES

Overview of Electrolytic Capacitors

- **Differentiation of electrolytic capacitors:**

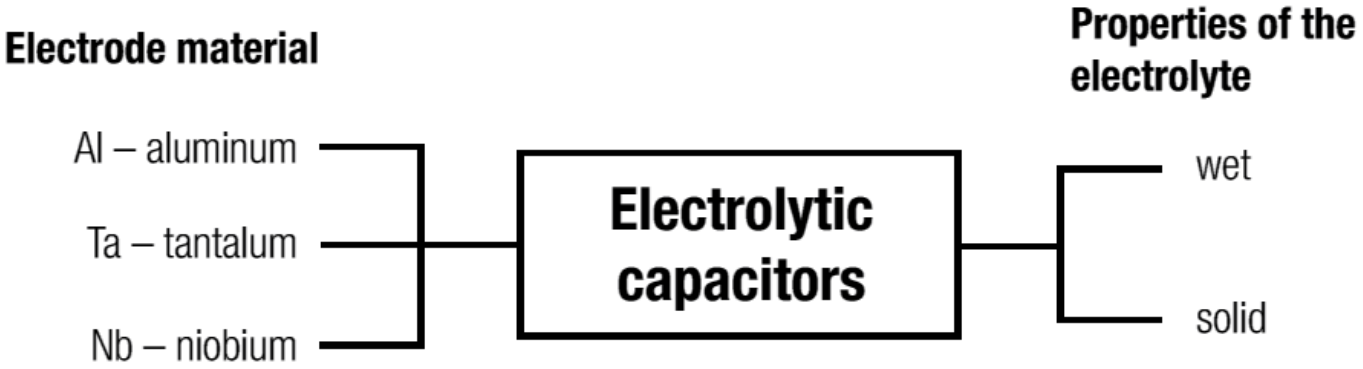

Anode electrode material	Dielectric	Relative permittivity (ε_r) at +20 °C
Al – aluminum	Al_2O_3 – aluminum oxide	9.3
Ta – tantalum	Ta_2O_5 – tantalum pentoxide	26
Nb – niobium	Nb_2O_5 – niobium pentoxide	42

Construction of Aluminum Electrolytic Capacitor

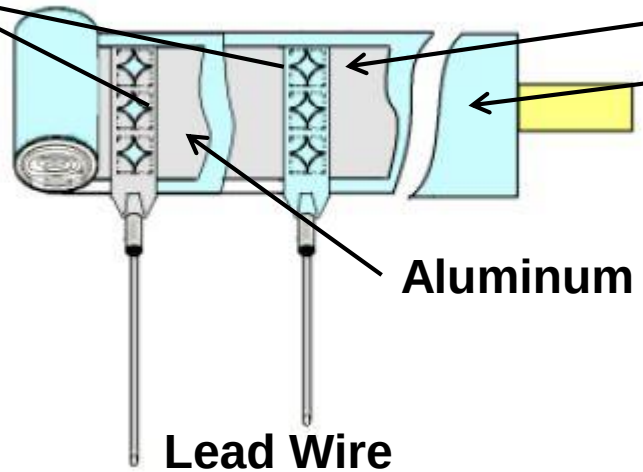

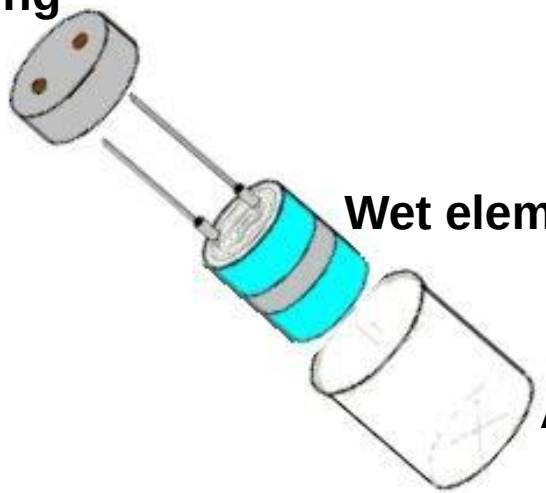

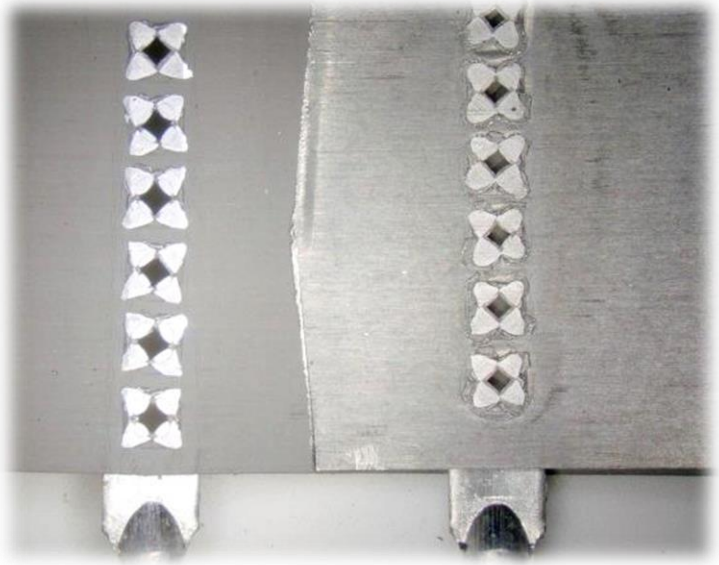

Construction of Aluminum Polymer Capacitor

Pretreated anode foil

Separator

Rubber

Cathode foil

Case

Stitched pins

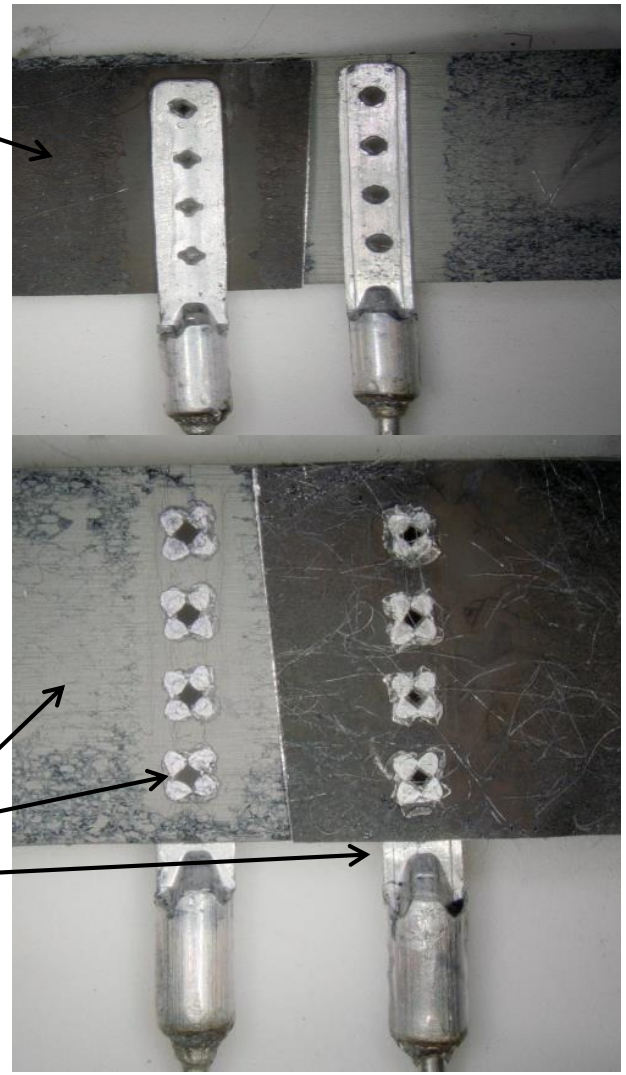

INFLUENCE OF THE INPUT CAPACITOR FOR A BUCK CONVERTER

Influence of the Input Capacitor for a Buck Converter

- Input voltage U_{in} = 12V
- Output voltage U_{out} = 5V
- Load current 1A (ohmic load)
- Frequency f_{switch} = 1MHz
- Monolithic synchronous converter
- Molded power Inductor
- Input filter

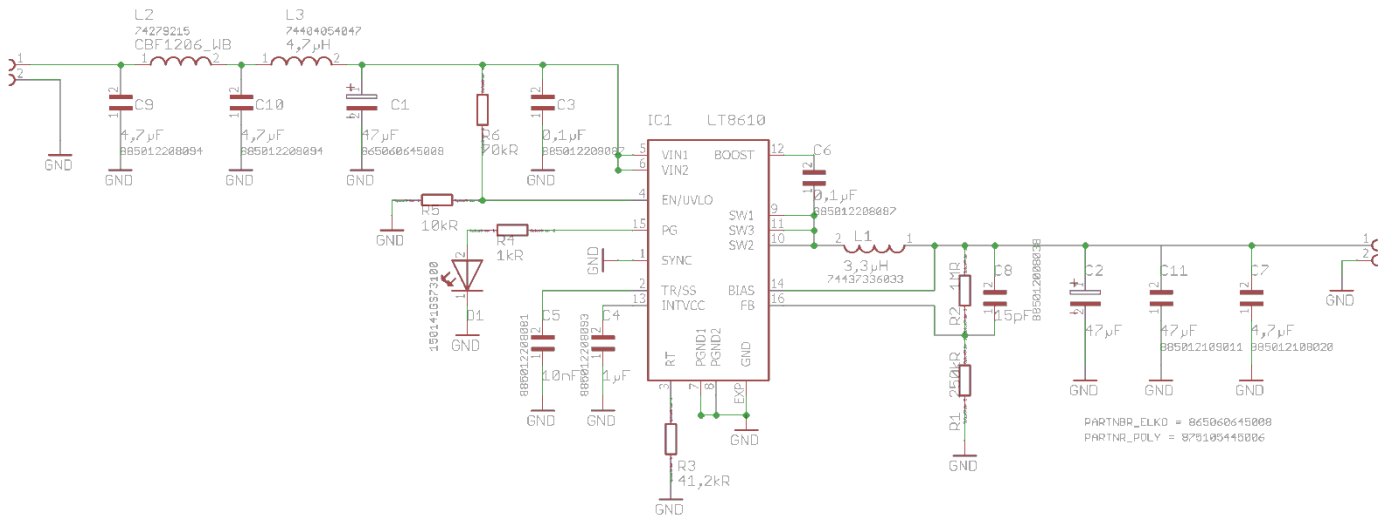

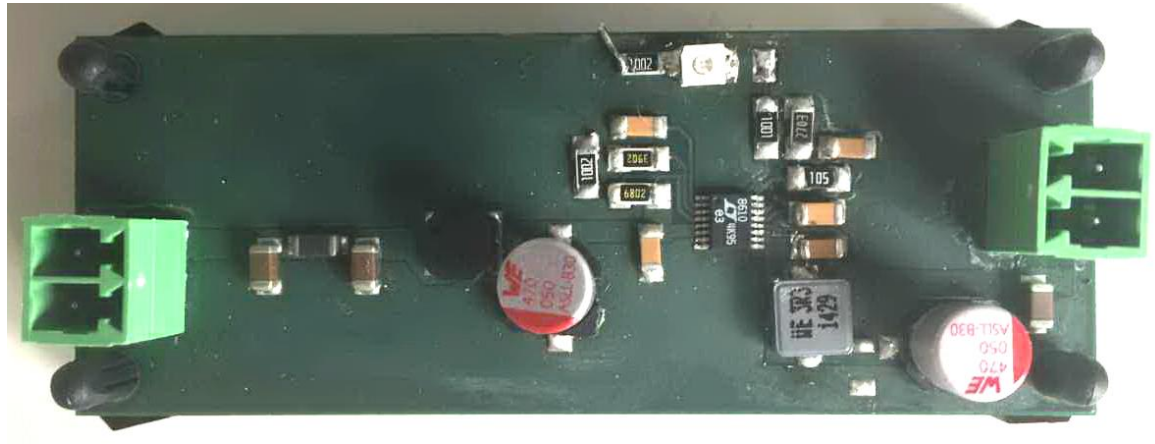

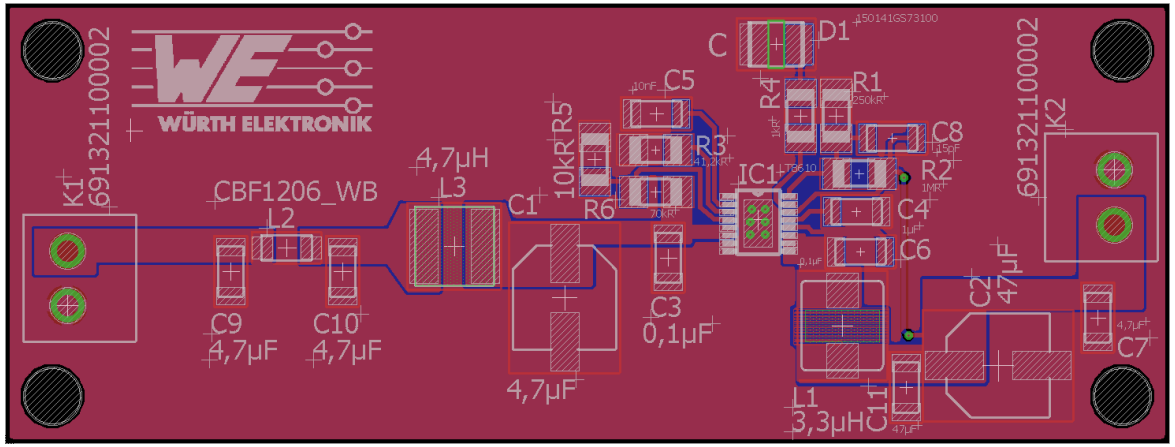

Measurement of Conducted Emission

- **Measurement equipment**
  - **R&S ESRP 3 EMI Test Receiver**
  - **LISN => ENV216 Two-Line V-Network**
  - **Measurement in a shielded room**

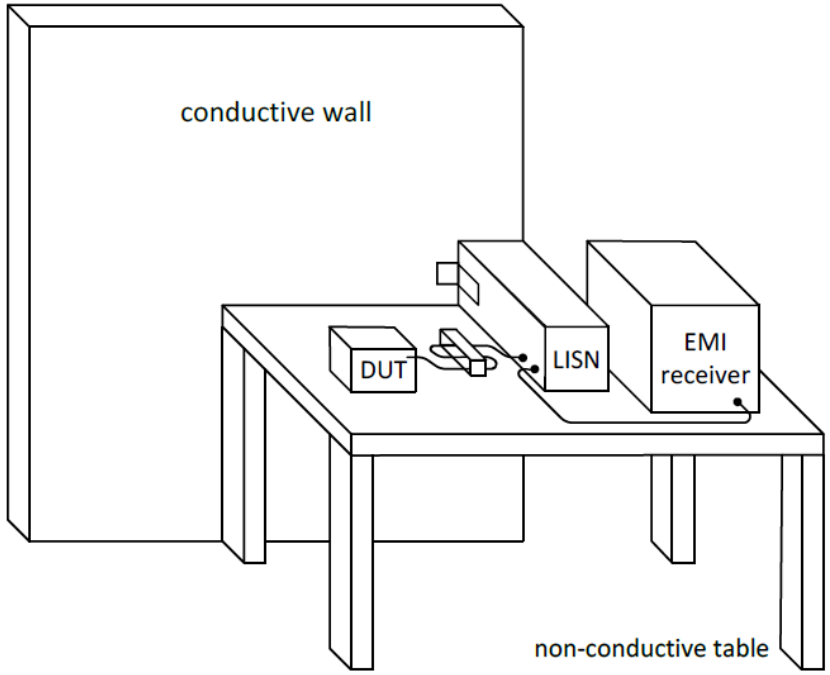

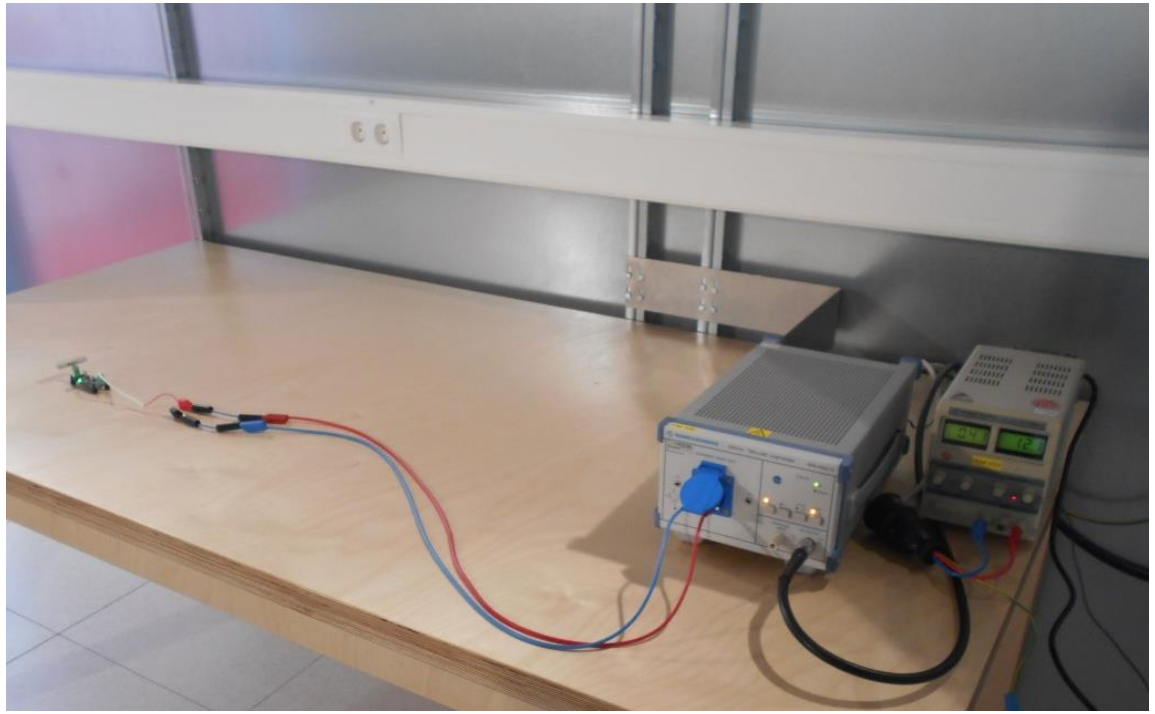

Conducted Emission – Measurement 1

- **No input filter**
- **Input capacitor: WCAP-ASLL 865060343004 => 47µF / 16V => ESR = 411mR / ESL = 19nH**

(REDEXPERT: http://we-online.com/re/46R2lMfx)

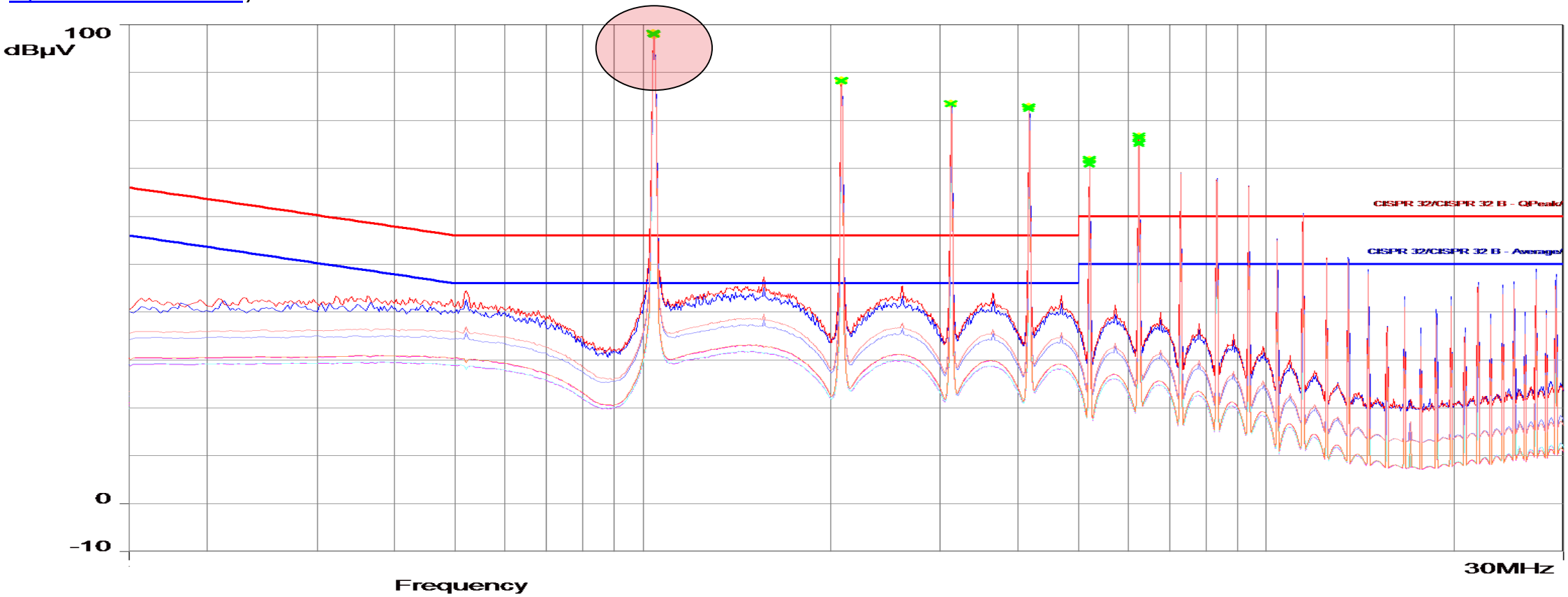

Conducted Emission – Root Cause

- **Symmetrical voltage at the input is:**

$$u_{sup}(t) \approx i_{in}(t) \cdot R_{sup} + u_{in}(t) = i_{in}(t) \cdot R_{sup} + i_{C,in}(t) \cdot R_{eq,C} + u_{C,in}(t)$$

- **ESR and ESL should be as small as possible**

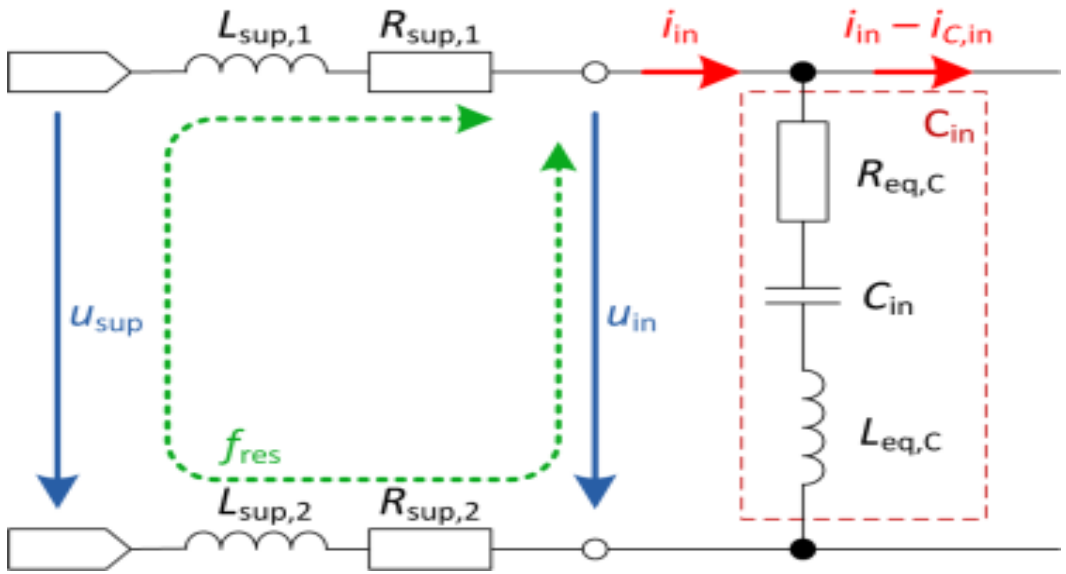

Possible resonance by L_{sup}, $L_{eq,C}$ and C_{in}

Conducted Emission – Measurement 2

- **No input filter,**
- **WCAP-PSLP 875105344006 => 47µF / 16V => ESR = 20,7mR / ESL = 3,9nH**

(**RED**EXPERT: http://we-online.com/re/48TxCoJe)

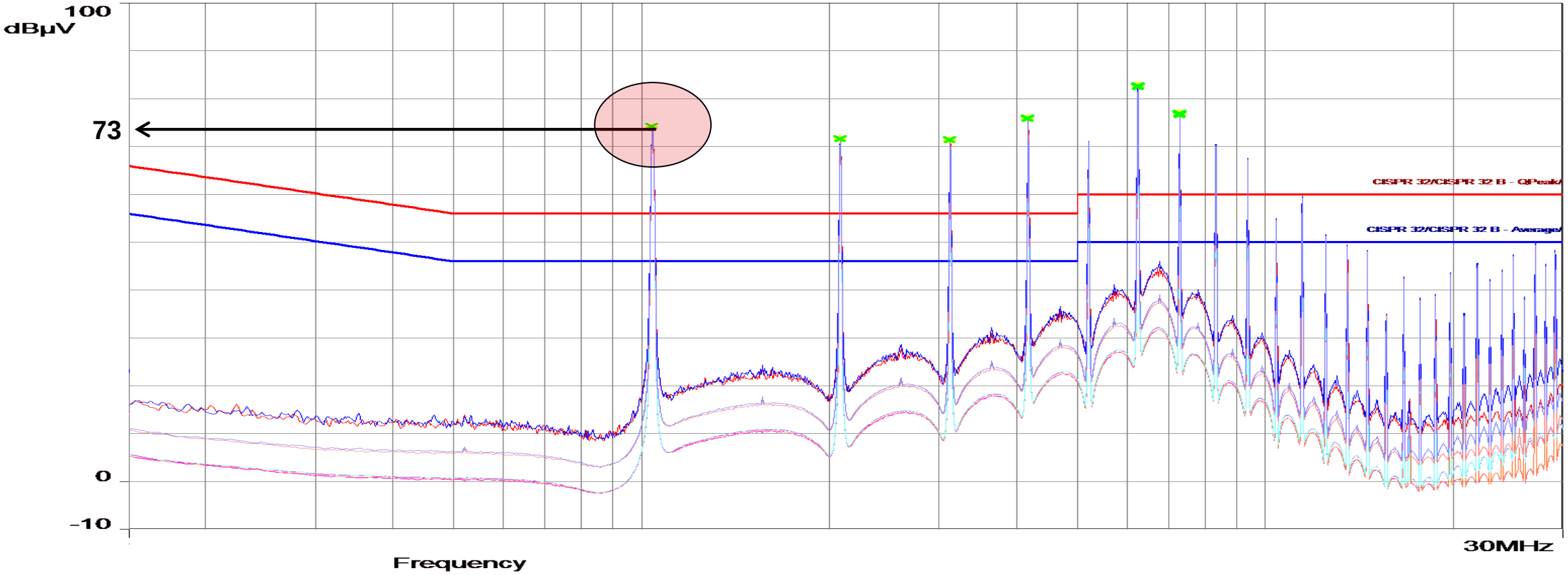

EMC Action – Input Filter

- **Definition of input filter**

- **π-filter with secondary stage inductor**
  - **MLCC -> WCAP-CSGP**
  - **Ferrite -> WE-CBF**
  - **Inductor -> WE-LQS**

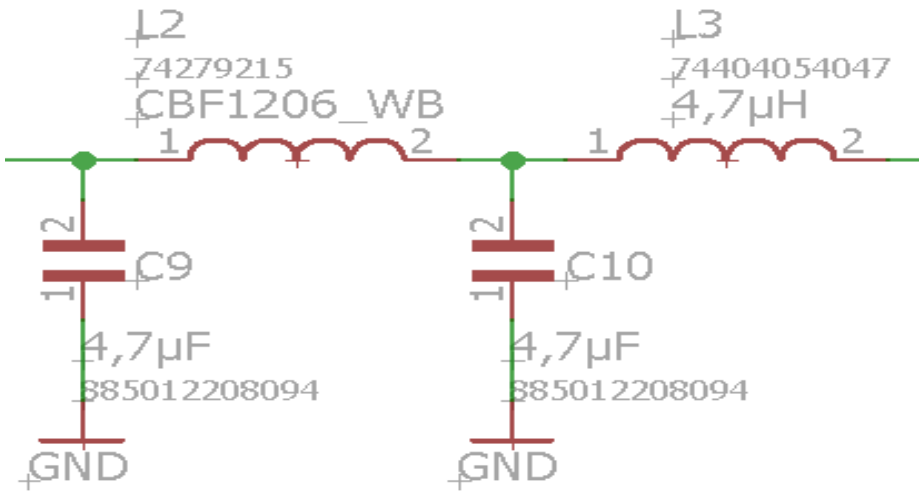

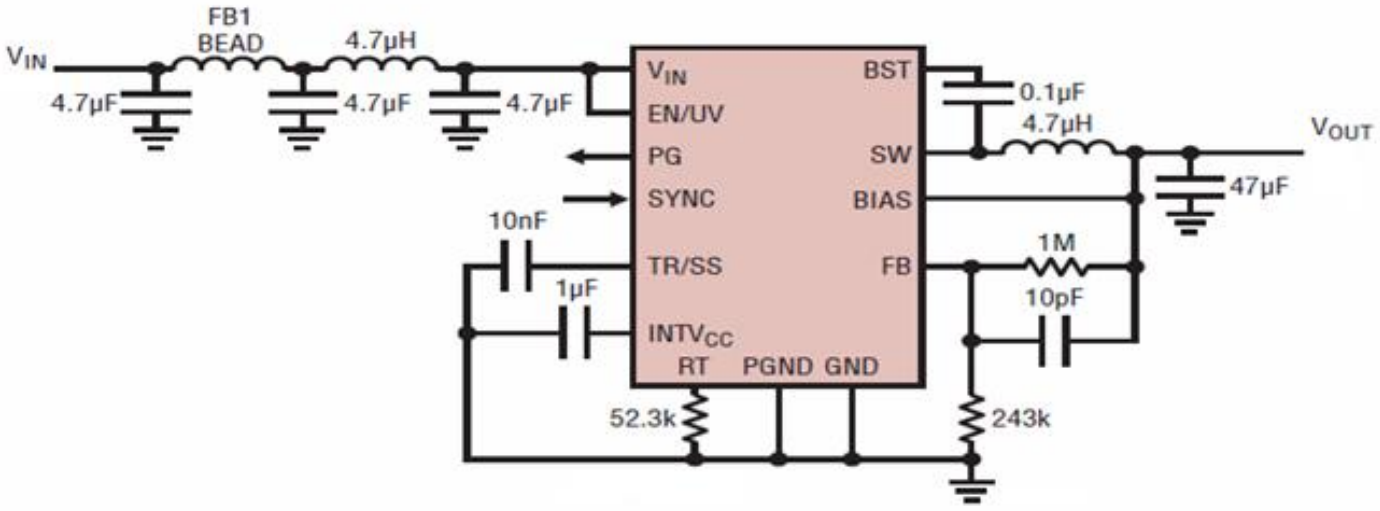

Conducted Emission – Measurement 4

- **Input filter plus input capacitor => WCAP-ASLL 865060343004**

Conducted Emission – Measurement 5

- **Input filter plus input capacitor => WCAP-PSLP 875105344006**

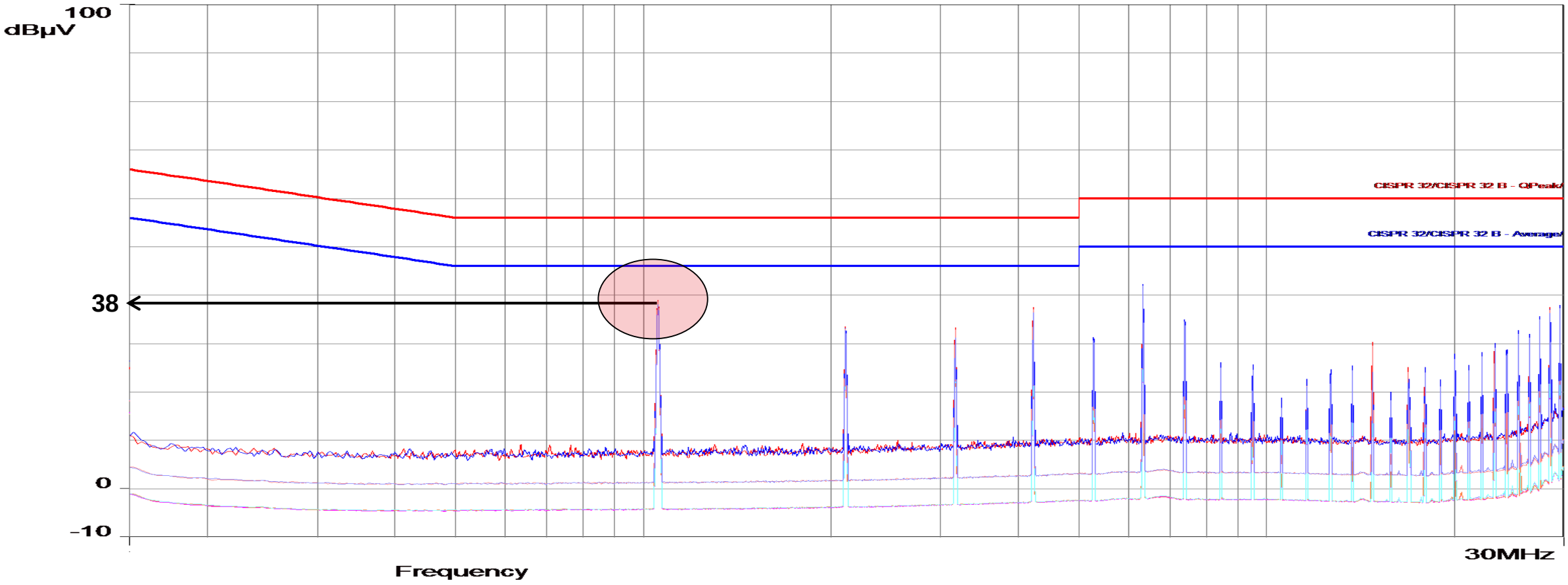

INFLUENCE OF THE OUTPUT CAPACITOR FOR A BUCK CONVERTER

Influence of the Output Capacitor for a Buck Converter

- Input voltage U_{in} = 12V
- Output voltage U_{out} = 5V
- Load current 1A (ohmic load)
- Frequency f_{switch} = 1MHz
- Monolithic synchronous converter
- Molded power Inductor
- Input filter

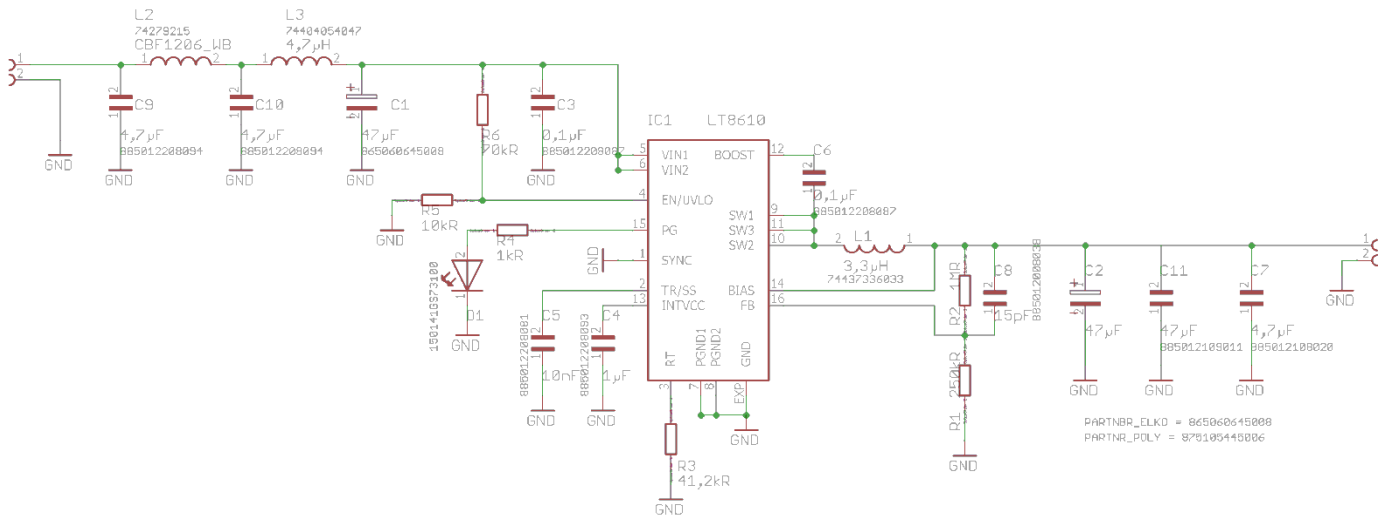

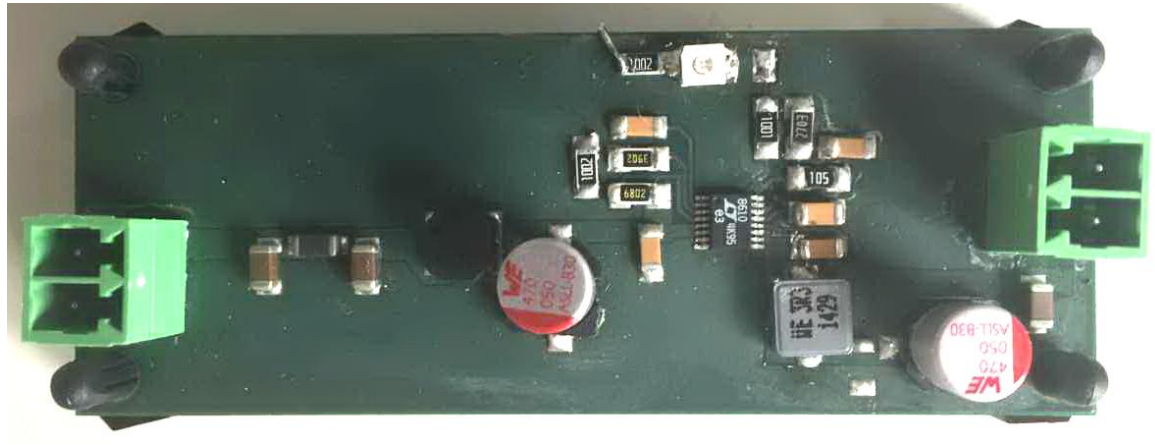

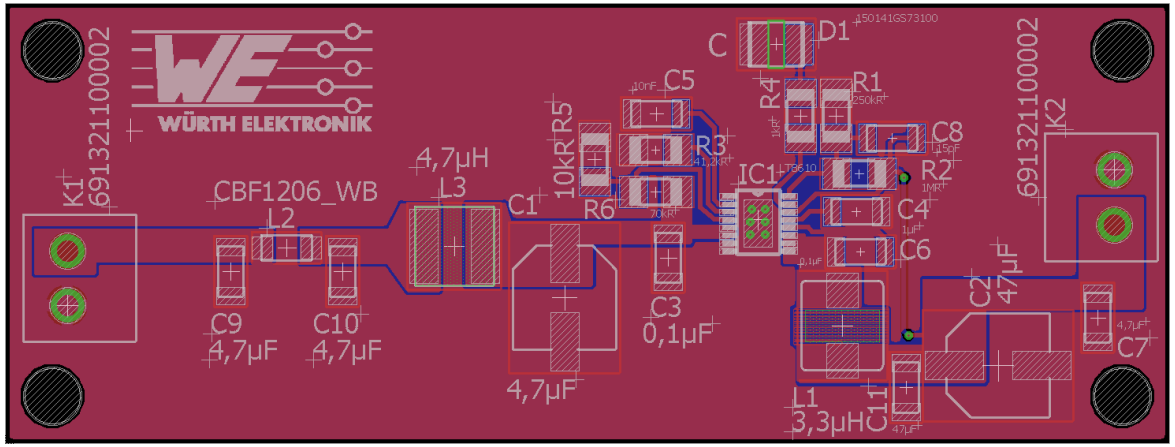

Influence of the Output Capacitor for a Buck Converter

- **Output capacitor => WCAP-ASLL 865060343004 => 47µF / 16V; ESR = 411mR / ESL = 19nH**

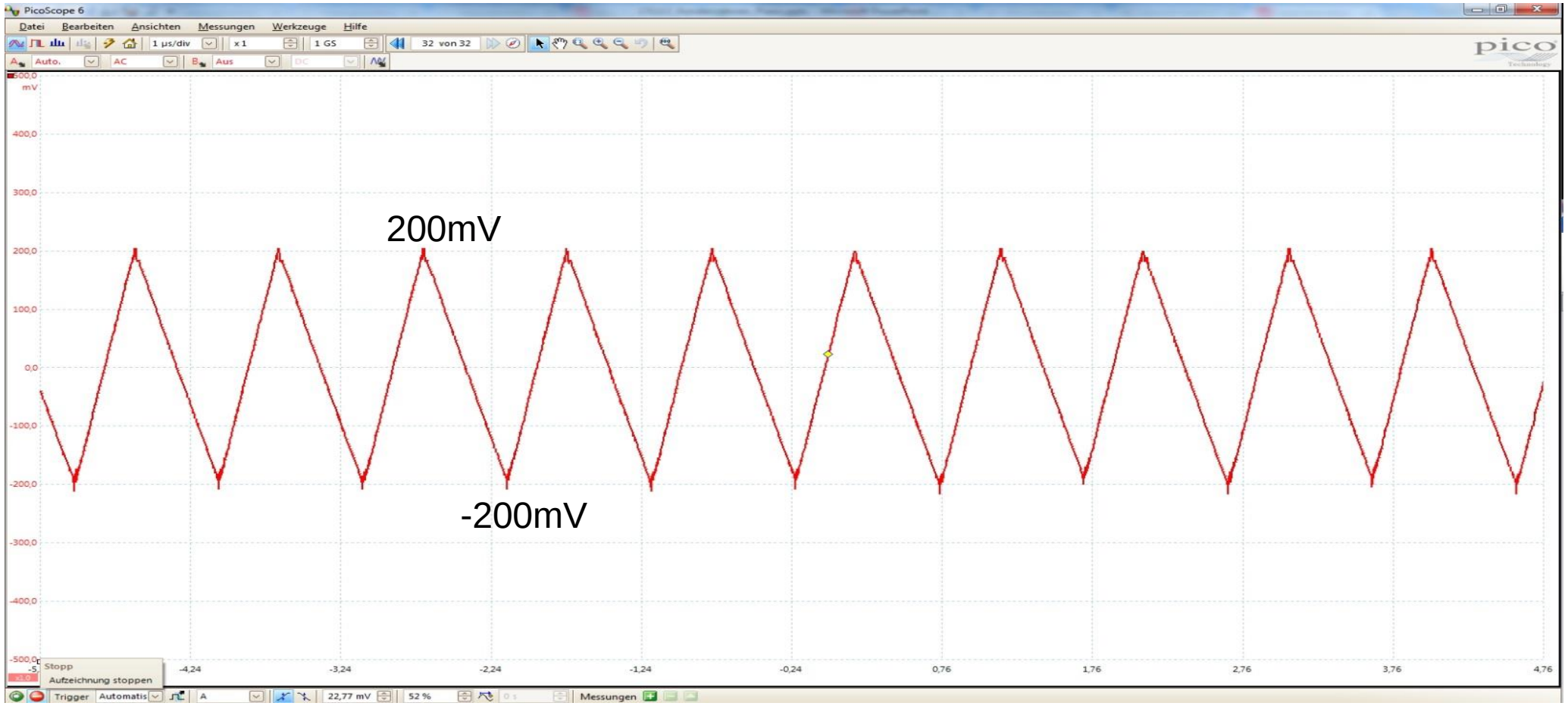

Output Voltage Ripple – Root Cause

- **The symmetrical voltage at the output is:**

$$u_{out}(t) \approx i_{C,out}(t) \cdot R_{eq,C} + u_{C,out}(t)$$

- **ESR as small as possible**

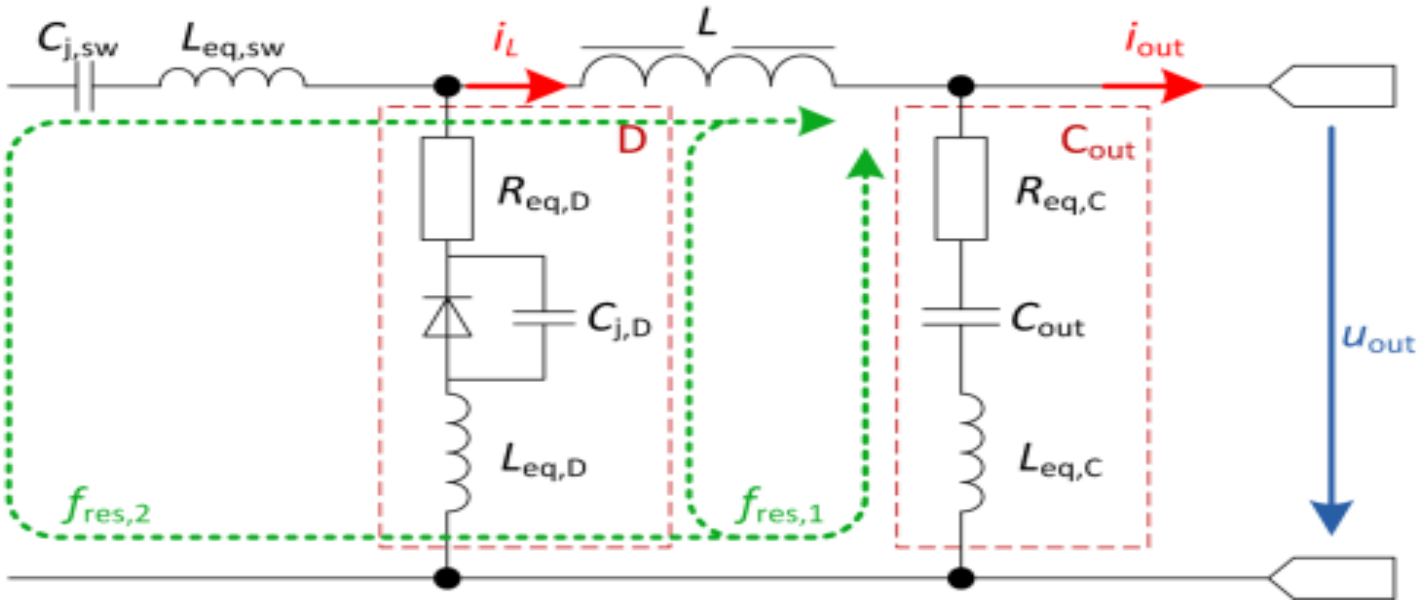

Possible differential resonances due to parasitic of the component

Influence of the Output Capacitor for a Buck Converter

- **Output capacitor => WCAP-PSLP 875105344006 => 47µF / 16V; ESR = 20,7mR / ESL = 3,9nH**

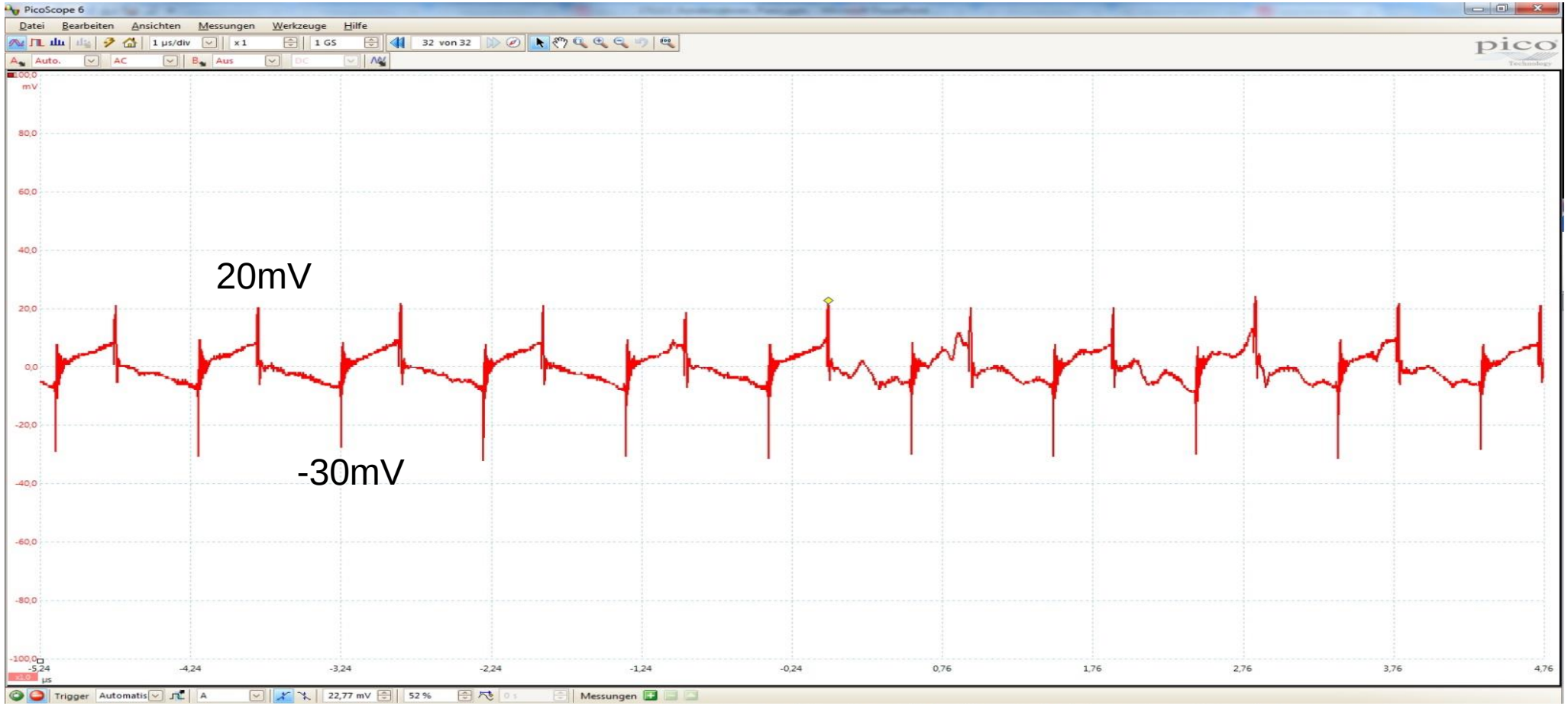

Influence of the Output Capacitor for a Buck Converter

- **Output capacitor => WCAP-PSLP and WCAP-CSGP**

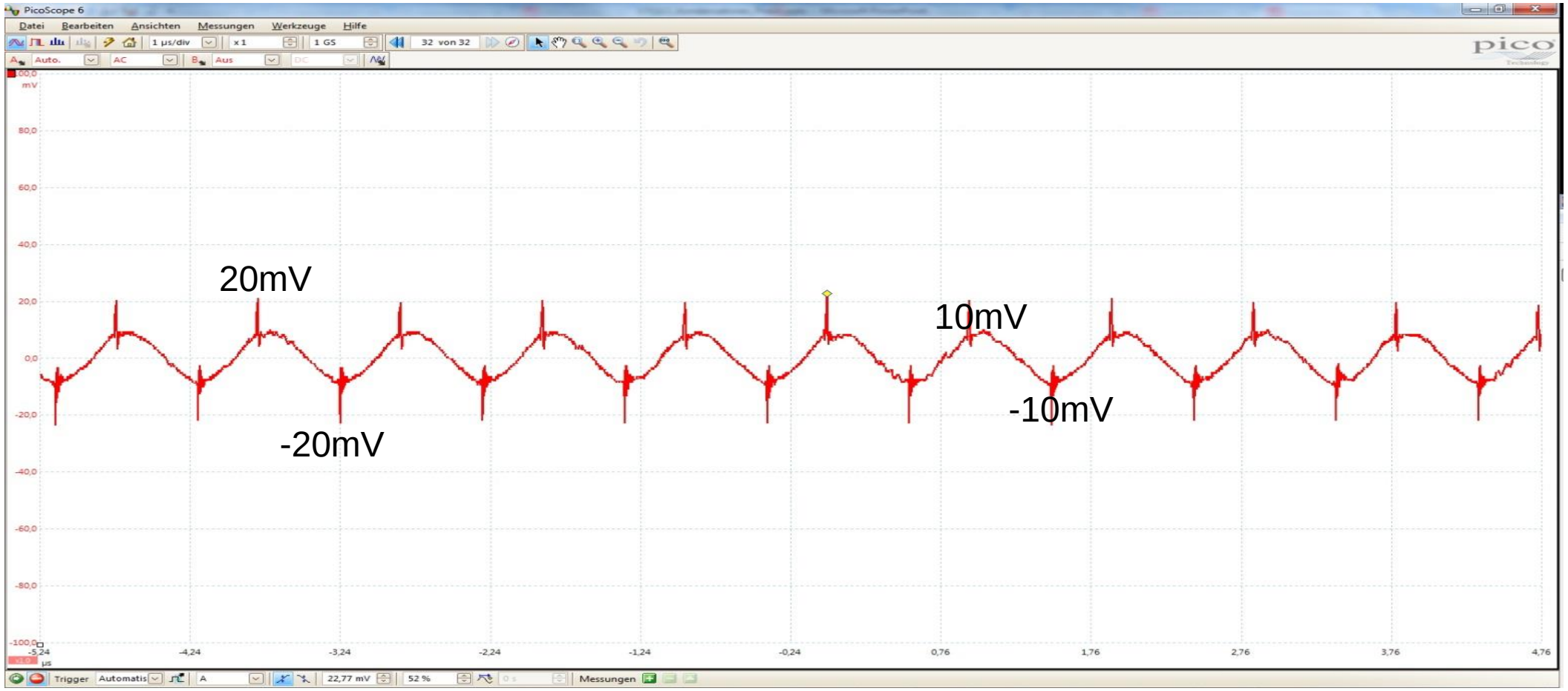

Conclusion

Application	Aluminum Electrolytic	Aluminum Solid Polymer
Filter	🟢	🟢
DC-DC Converter	🟢	🟢🟢
Battery powered appl.	🟢	🟡🔴
Low / green energy	🟡	🔴
Low temperature	🟡	🟢
High temperature	🔴	🟢
Audio	🟢	🟢
Higher vibration	🟢🟡	🔴

Thanks for your attention!