# CAPACITOR FUNDAMENTALS 301

## HOW TO SELECT A CAPACITOR FOR POWER SUPPLIES

# Capacitor Committee

Upcoming Events

**PSMA Capacitor Committee Website, Old Fundamentals Webinars, Training Presentations and much more** – https://www.psma.com/technical-forums/capacitor

**Capacitor Workshop**
***"How to choose and define capacitor usage for various applications, wideband trends, and new technologies"*** **The day before APEC, Saturday March 14 from 7:00AM to 6:00PM**

**Capacitor Industry Session as part of APEC**
***"Capacitors That Stand Up to the Mission Profiles of the Future – eMobility, Broadband"***

**Tuesday March 17, 8:30AM to Noon in New Orleans**

**Capacitor Roadmap Webinar – Timing TBD – Latest in Research and Technology**

Additional info here.

# Short Introduction of Today‘s Presenter

## Eduardo Drehmer

Director of Marketing

FILM Capacitors


+1 732 319 1831

Eduardo.drehmer@tdk-electronics.tdk.com

www.tdk.com


**Background:**

- Over 20 years experience with knowledge on Manufacturing, Quality and Application of Electronic Components.
- Responsible for Technical Marketing for Film Capacitors

# Short Introduction of Today's Presenter

Edward Lobo was born in Acushnet, MA in 1943 and graduated from the University of Massachusetts in Amherst in 1967 with a BS in Chemistry. Ed worked for Magnetek, Aerovox and CDE where he is currently Chief Engineer for New Product Development.

Ed has served for over 52 years in capacitor product development. He holds 14 US patents involving capacitors.

Ed Lobo
*Chief Engineer, New Product*
*elobo@cde.com*

# ABSTRACT

This presentation will guide individuals selecting components for their Electronic Power Supplies. Capacitors come in a wide variety of technologies, and each offers specific benefits that should be considered when designing a Power Supply circuit.

The presenters will cover critical parameters that should be considered when selecting capacitors and comparing advantages and disadvantages of the various types of capacitors available in the market.

# BASIC CONCEPTS / SYMBOLS

## Basic Concept

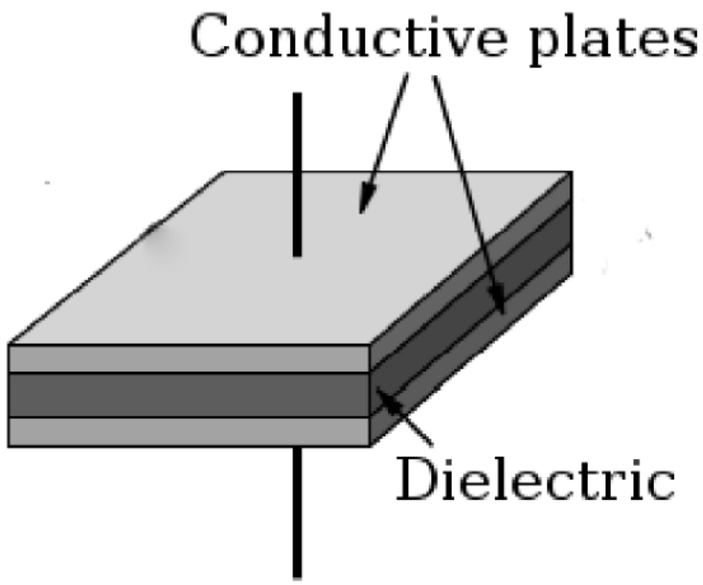


## Symbols

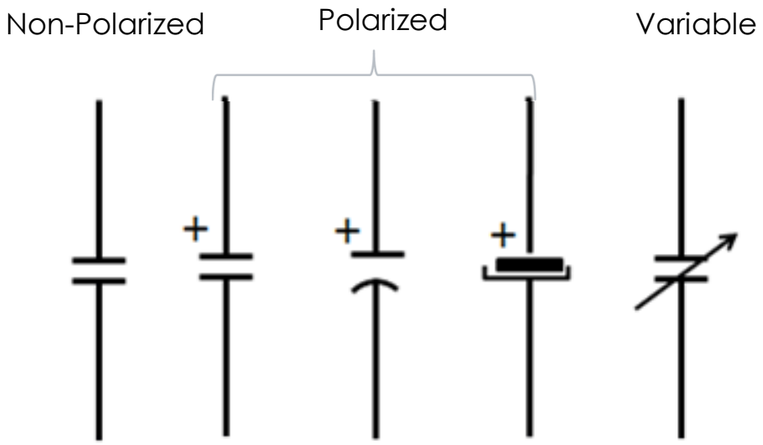


| Name | Abbreviation | Farads |
|---|---|---|
| Picofarad | pF | 0.000000000001 F |
| Nanofarad | nF | 0.000000001 F |
| Microfarad | uF | 0.000001 F |
| Milifarad | mF | 0.001 F |
| Kilofarad | kF | 1000 F |

# MOST COMMON CAPACITOR TECHNOLOGIES

**Ceramic (MLCC)**

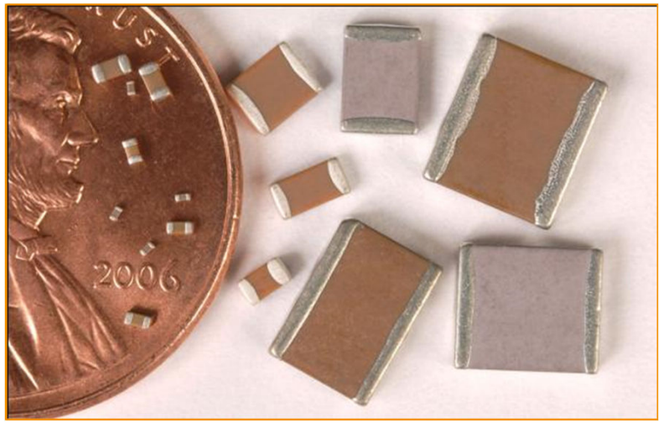

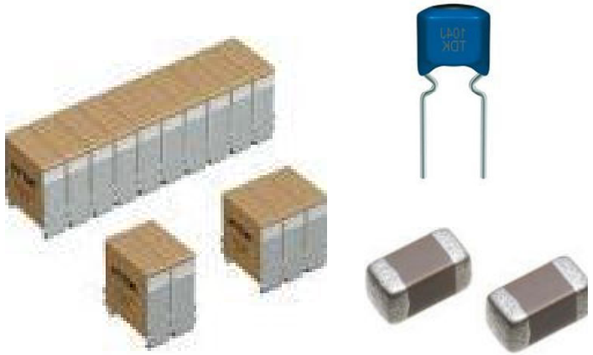

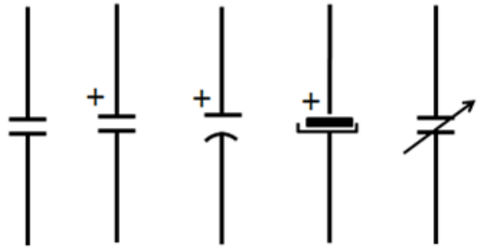

**Film (Metalized Film)**


**Aluminum (Electrolytic)**

# OTHER CAPACITOR TECHNOLOGIES

**Tantalum**

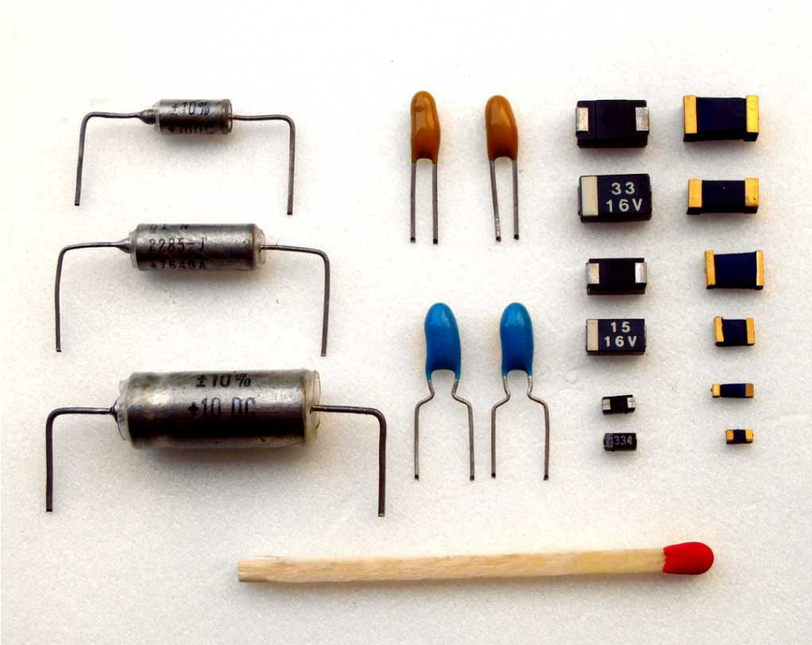


**Supercapacitors**

# TECHNOLOGIES OVERVIEW

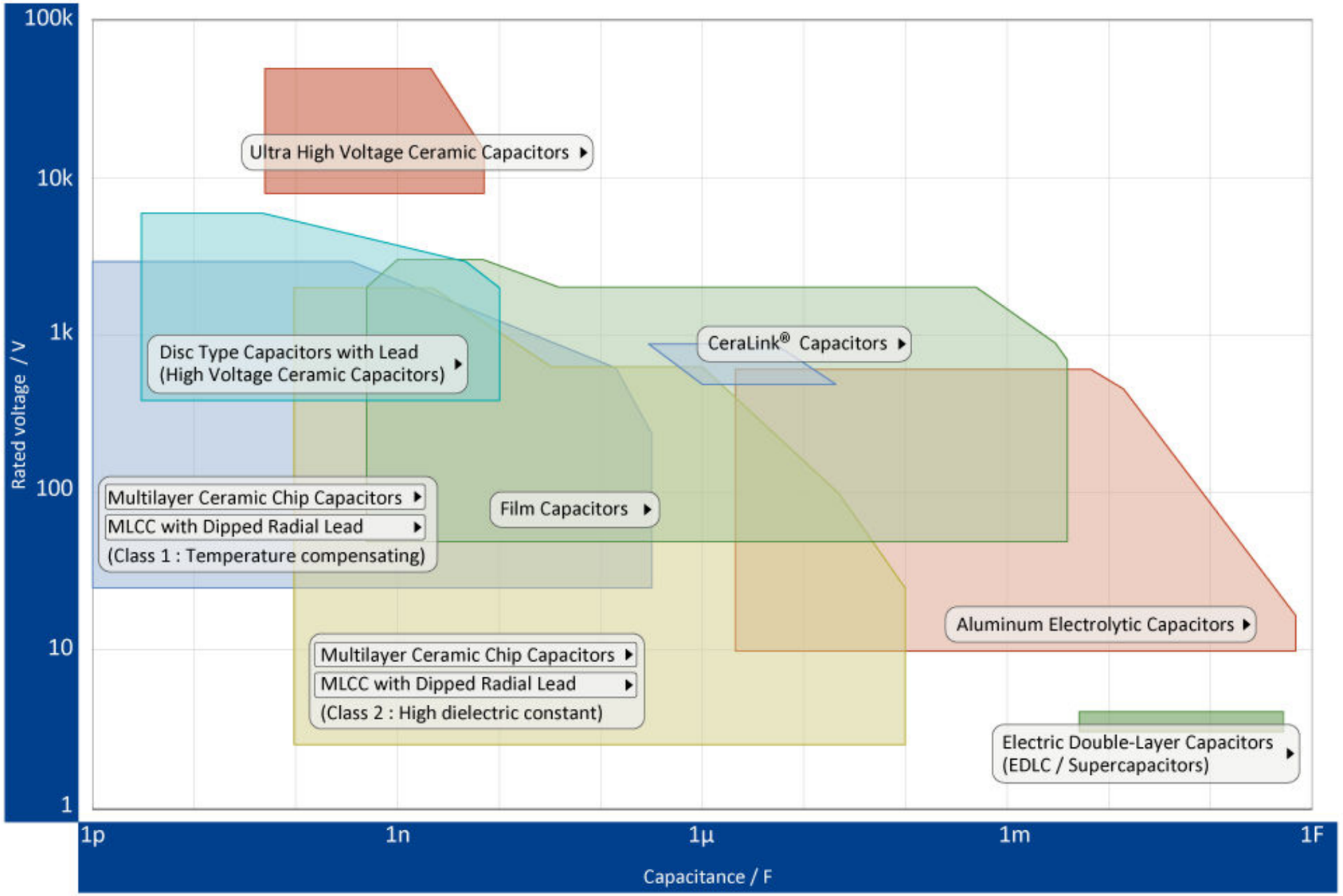

# TECHNOLOGY COMPARISON

| capacitor type | max. possible capacitance | voltage range | max. permissible current | max. operating temperature | Applications |
|---|---|---|---|---|---|
| **Aluminum Electrolytic Capacitor** | > 1F | ca. 650 V | ca. 0,05 A/µF | 85°C up to 150°C | smoothing, buffering, DC Link |
| **Film Capacitors** | > 8mF | ca. 3kV | ca. 3 A/µF | 70°C up to 125°C | DC Link, EMI suppresion, filtering |
| **MLCC's** | > 100 µF | ca. 10 kV | ca. 10 A/µF | 85°C up to 200°C | EMI suppression, buffering, coupling |

# TECHNOLOGY COMPARISON

| Items | Ceramic Capacitors | Aluminum Electrolytic Capacitors | Film Capacitors |
|---|---|---|---|
| |  |  |  |
| Large capacitance | | ✓ | |
| Temperature characteristics | ✓*1 | | ✓ |
| DC bias characteristics | ✓*1 | ✓ | ✓ |
| Lifespan | ✓ | | ✓ |
| Moisture/Heat resistance | ✓ | | ✓ |
| Self-healing | | | ✓ |
| Compact size | ✓ | | |

*1 Type1 (temperature compensating) only

# TERMINATIONS / ASSEMBLY TYPE

**Surface Mount**

- Smaller Components
- Lower Power


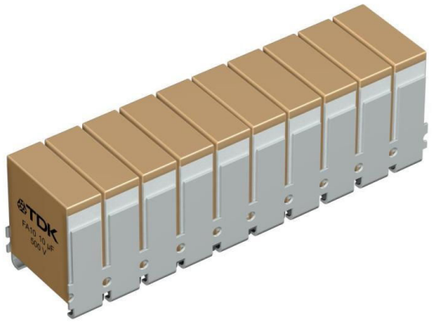


Normally using reflow soldering process.
(~260°C peak body temperature)

# TERMINATIONS / ASSEMBLY TYPE

## PCB Mount / Through Hole

- Different Shapes/Sizes
- Medium Power

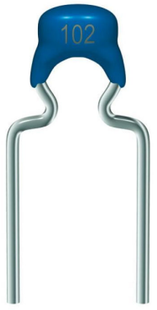




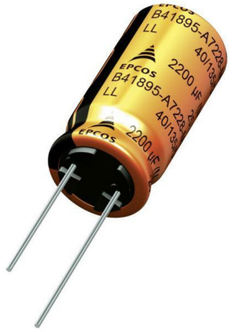



Normally using wave or selective soldering process.
(~120°C peak body temperature)

# TERMINATIONS / ASSEMBLY TYPE

## BusBar / Screw Types

- Large Volume
- High Power





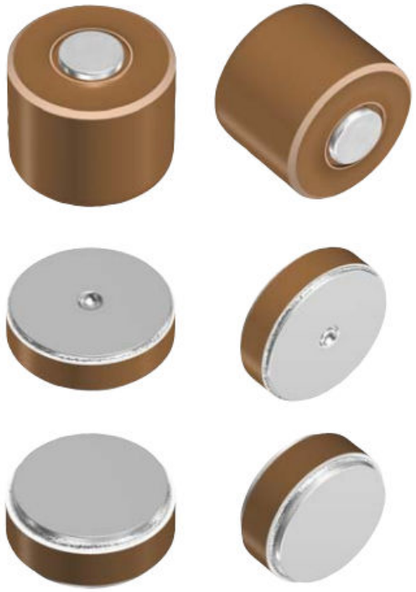

No soldering needed.
Mechanical assembly parameters are critical.

# CAPACITOR CHARACTERISTICS

## EQUIVALENT CIRCUIT OF EACH CAPACITOR

the equivalent circuit diagram is described like following:

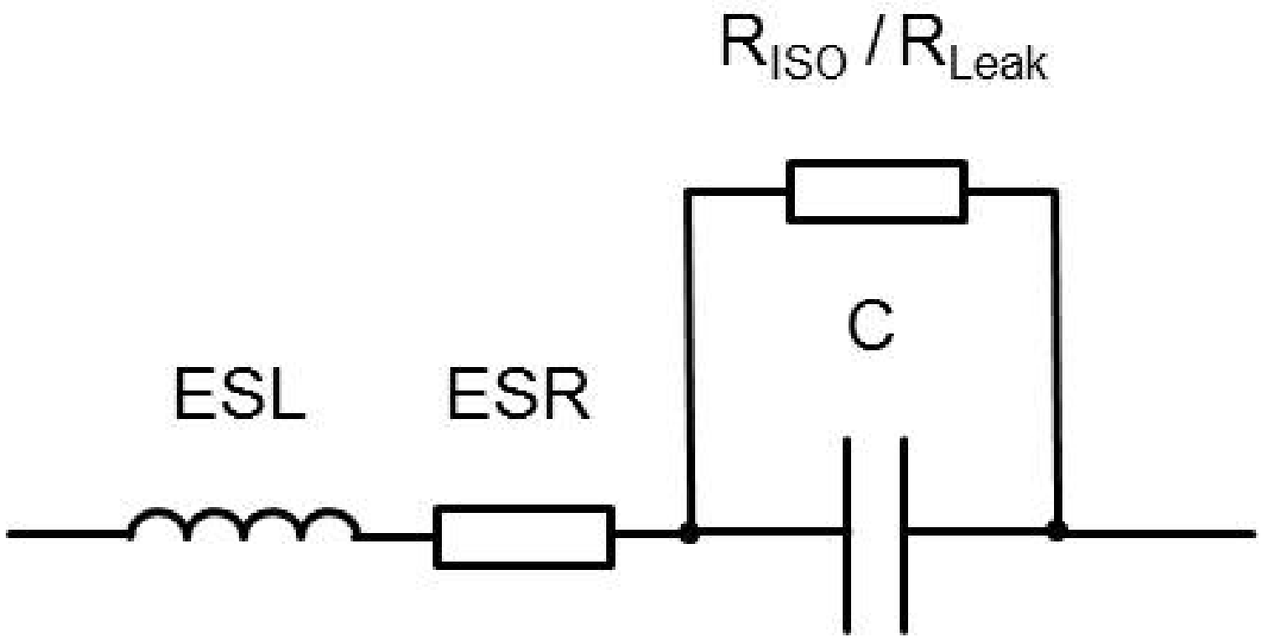


**beside the capacitance you have 3 major parameters:**

**ESR** – Equivalent Series Resistance

**ESL** – Equivalent Series Inductance

**$R_{ISO}$ / $R_{Leak}$** – Isolation Resistance

# Capacitor Characteristics

## EQUIVALENT CIRCUIT: ESR - EQUIVALENT SERIES RESISTANCE

the equivalent circuit diagram is described like following:

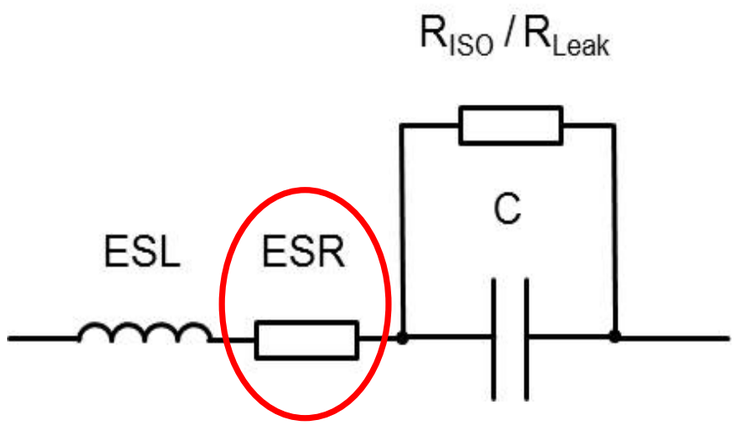


ESR – Equivalent Series Resistance

Reason for self heating in case of Ripple or AC load

Values are typically specified @ 120Hz or 100kHz with 20°C ambient condition

Can be calculated like following:

$$ESR = \frac{\tan\delta}{2 * \pi * f * C} = \tan\delta * X_C \quad \text{mit} \quad X_C = \frac{1}{2 * \pi * f * C} = \frac{1}{\omega * C}$$

# Capacitor Characteristics

## EQUIVALENT CIRCUIT: ESL - EQUIVALENT SERIES INDUCTANCE

the equivalent circuit diagram is described like following:

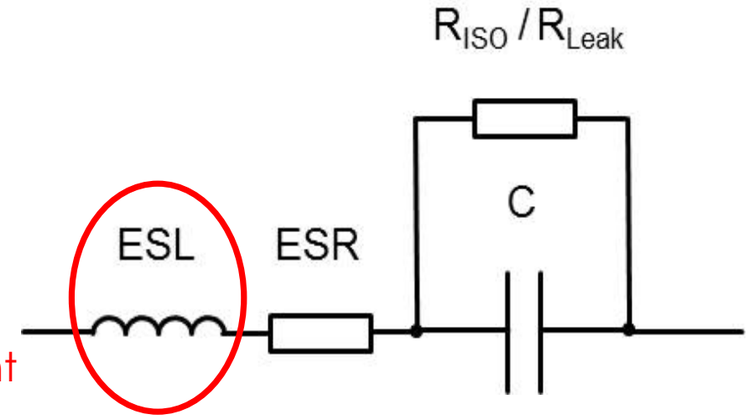


ESL – Equivalent

Is mainly driven by inner construction of capacitor element and connections to it

New cap designs are optimized for low ESL to drop these parasitic effects

Can be calculated as following:

$$ESL = \frac{X_L}{2 * \pi * f} \Rightarrow X_L = (2 * \pi * f * ESL) = (\omega * ESL)$$

# Capacitor Characteristics

## EQUIVALENT CIRCUIT: $R_{ISO}$ / $R_{LEAK}$ - ISOLATION RESISTANCE

the equivalent circuit diagram is described like following:

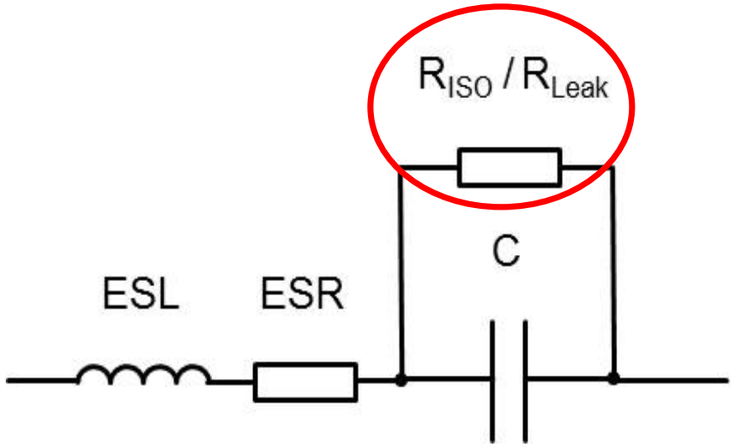


$R_{iso}$ / $R_{leak}$ – Isolation Resistance

Is the ohmic resistance between the electrodes

Will be given as [MΩ] or as τ [s]

$$\tau[s] = R_{ISO}[M\Omega * \mu F] = R_{ISO}[M\Omega] * C[\mu F]$$

Humidity can reduce the isolation resistance drastically

# Capacitor Characteristics

## EQUIVALENT CIRCUIT: Z - IMPEDANCE

the equivalent circuit diagram is described like following:

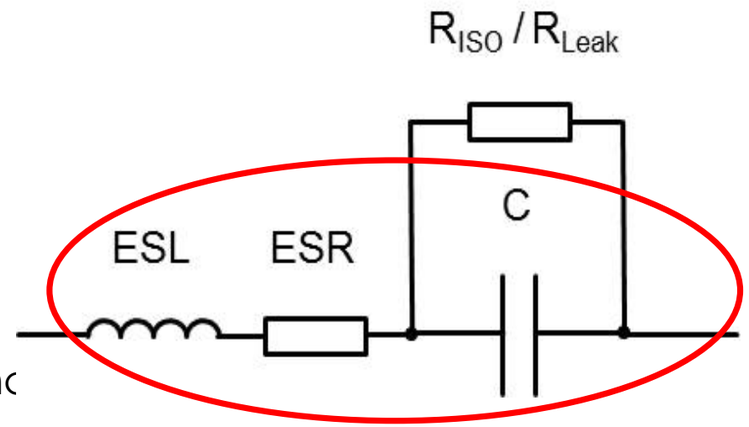


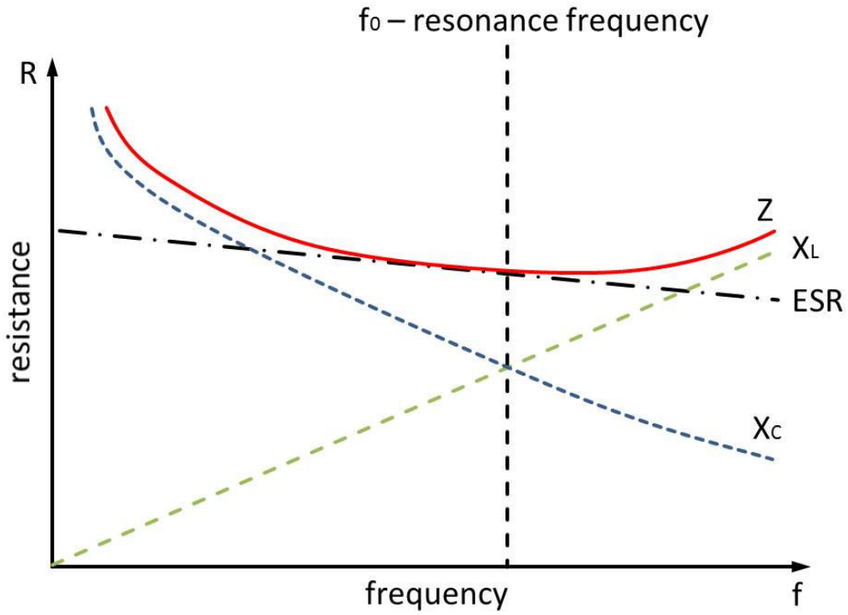


Z – Impedanc

Describes the AC mode characteristics

Is based on 3 parameter - ESR, $X_L$ and $X_C$

Can be calculated as following:

$$Z = \sqrt{ESR^2 + (X_L - X_C)^2}$$

# TEMPERATURE RATINGS

## Ceramic Capacitor Temperature Classes:

| IEC/EN 603841 & IEC/EN 60384-8/9/21/22 | EIA RS-198 |
|---|---|
| **Class 1** ceramic caps offer high stability and low losses for resonant circuit applications | **Class I** ceramic caps offer high stability and low losses for resonant circuit applications |
| **Class 2** ceramic capacitors offer high volumetric efficiency for smoothing, by-pass, coupling and decoupling applications | **Class II** (or written class 2) ceramic capacitors offer high volumetric efficiency with change of capacitance lower than −15% to +15% and a temperature range greater than −55 °C to +125 °C, for smoothing, by-pass, coupling and decoupling applications |
| **Class 3** ceramic capacitors are barrier layer capacitors which are not standardized anymore | **Class III** (or written class 3) ceramic capacitors offer higher volumetric efficiency than EIA class II and typical change of capacitance by −22% to +56% over a lower temperature range of 10 °C to 55 °C. They can be substituted with EIA class 2- Y5U/Y5V or Z5U/Z5V capacitors |
| | **Class IV** (or written class 4) ceramic capacitors are barrier layer capacitors which are not standardized anymore |

With class definitions understood you can look how the temperature coefficients break down.

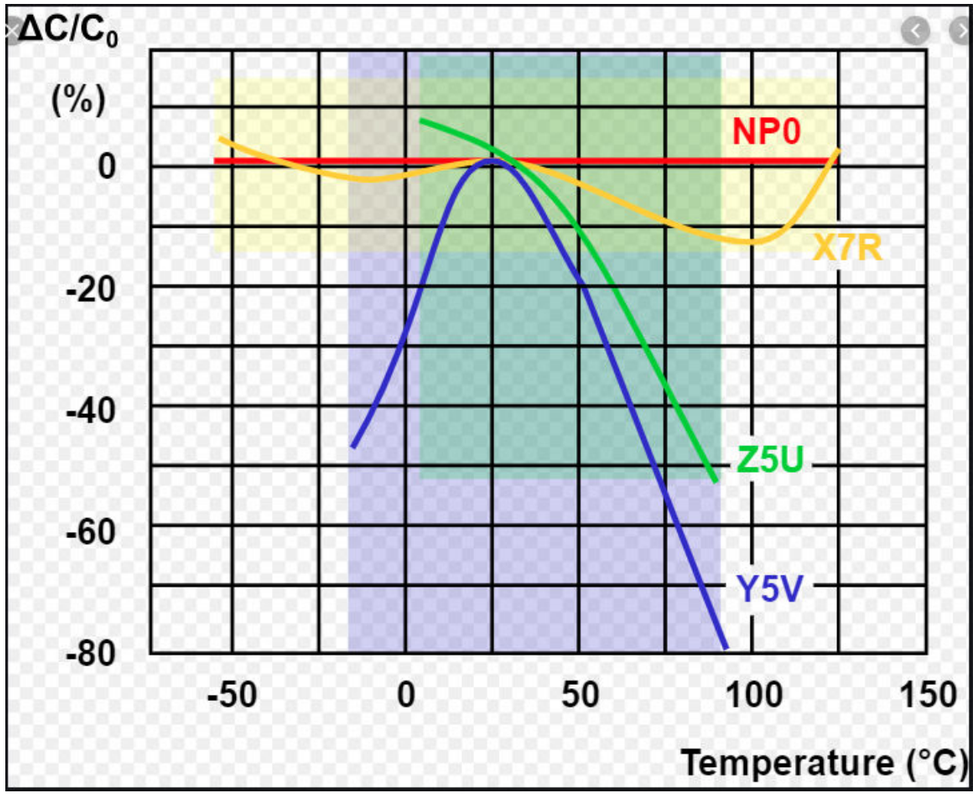


➡ Ceramic caps might show significant variations in their characteristics due to Amb Temp.

# TEMPERATURE RATINGS

## Aluminum Electrolythic Typical Curves

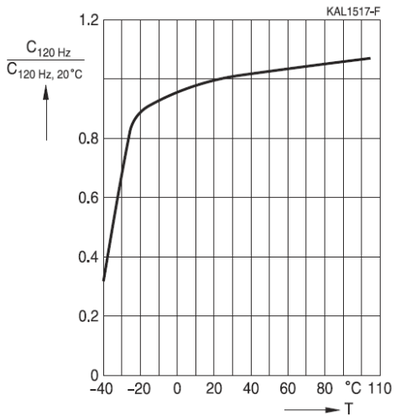


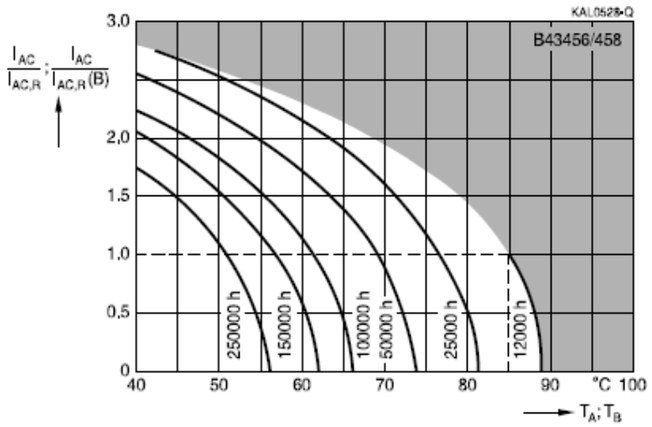


ALU caps might change significantly their life expectation by temperature.

## Metalized Film Typical Curves

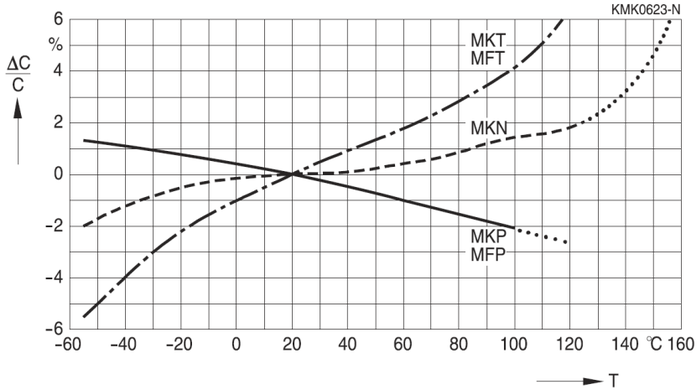


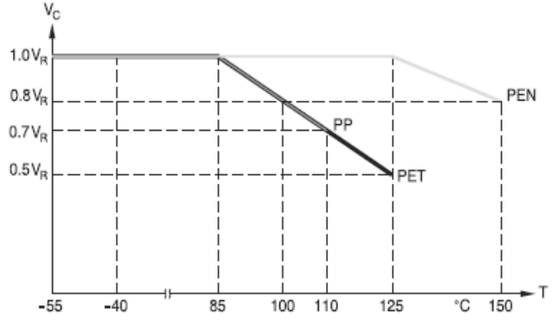


FILM caps are very sensitive to high temperatures.

# TEMPERATURE RATINGS

| | | |
|---|---|---|
| Operating temperature range | Max. operating temperature $T_{op,max}$ | +125 °C |
| | Upper category temperature $T_{max}$ | +125 °C |
| | Lower category temperature $T_{min}$ | −55 °C |
| | Rated temperature $T_R$ | +85 °C |

**Amb + Self Heating!**

**Temperature used for other ratings listed**

# TEMPERATURE RATINGS

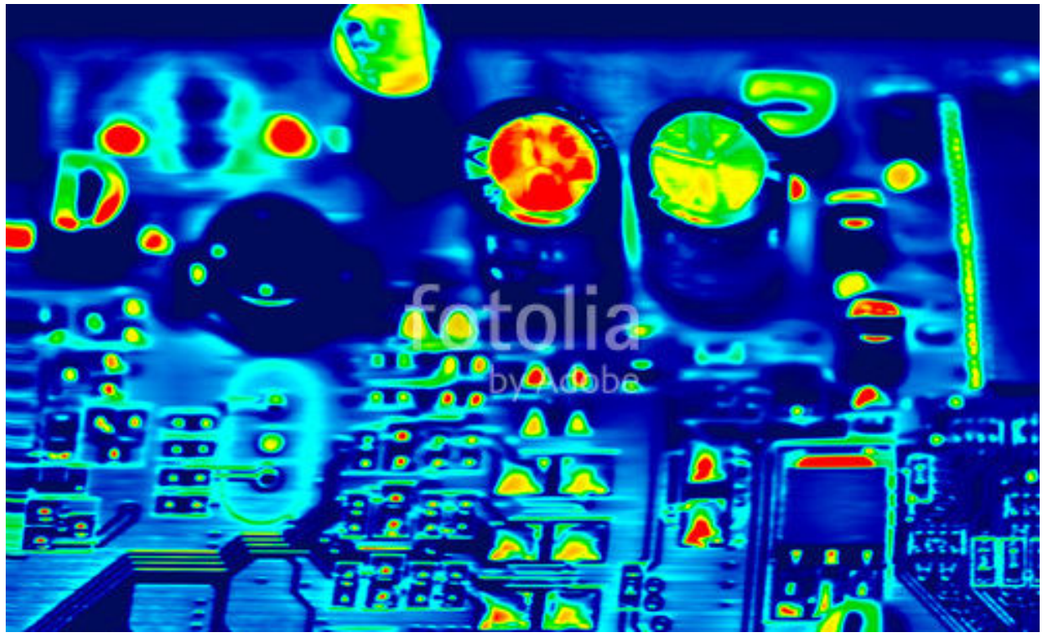


**Thermal Analyses can be very useful!!**

# TEMPERATURE RATINGS

**Case Temperature:**
**(Amb + Self Heat @ Max Load)**

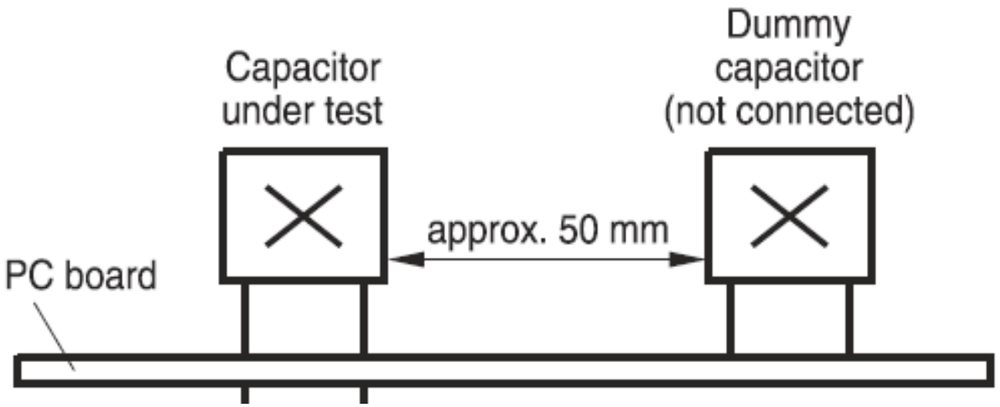


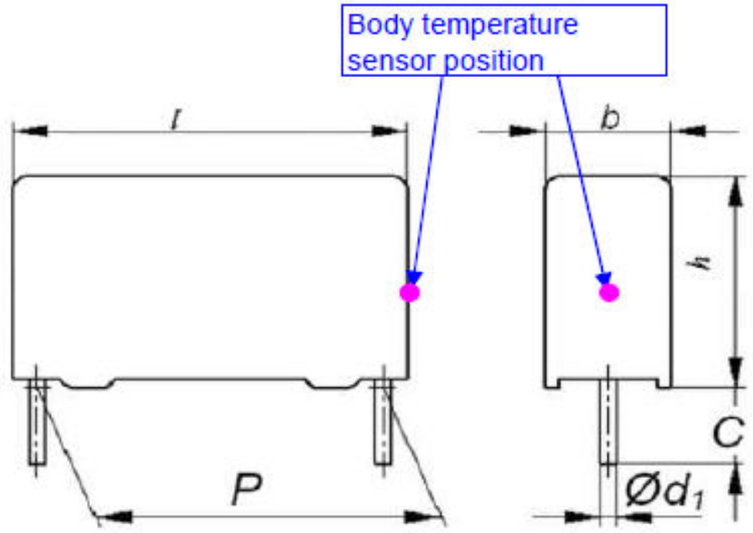


**Search for your component Hot Spot**

# COMMON FAILURE MECHANISMS

- Over Temperature
- Over Current
- Over Voltage
- Humidity
- Mechanical Stress

# LIFE EXPECTANCY CALCULATIONS

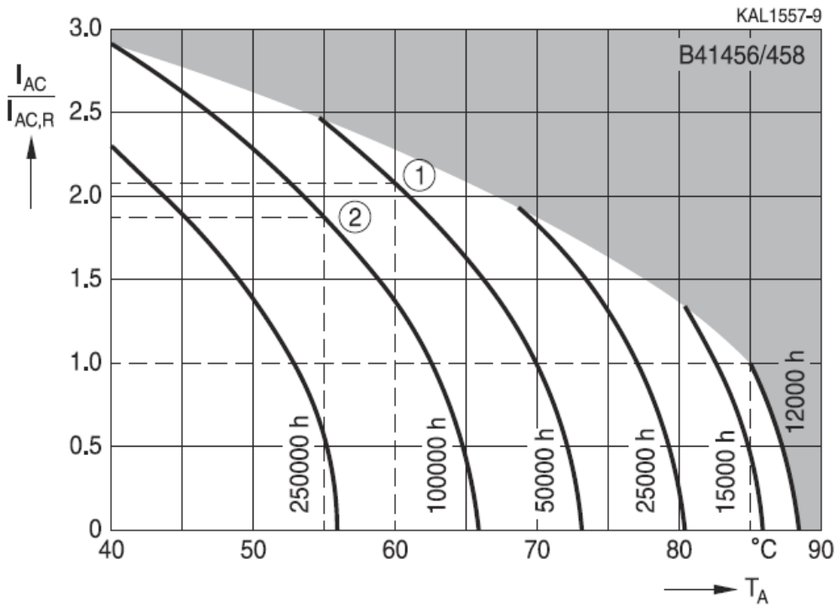


Figure 17
Useful life depending on ambient temperature $T_A$ under ripple current operating conditions (series B41456 / B41458)

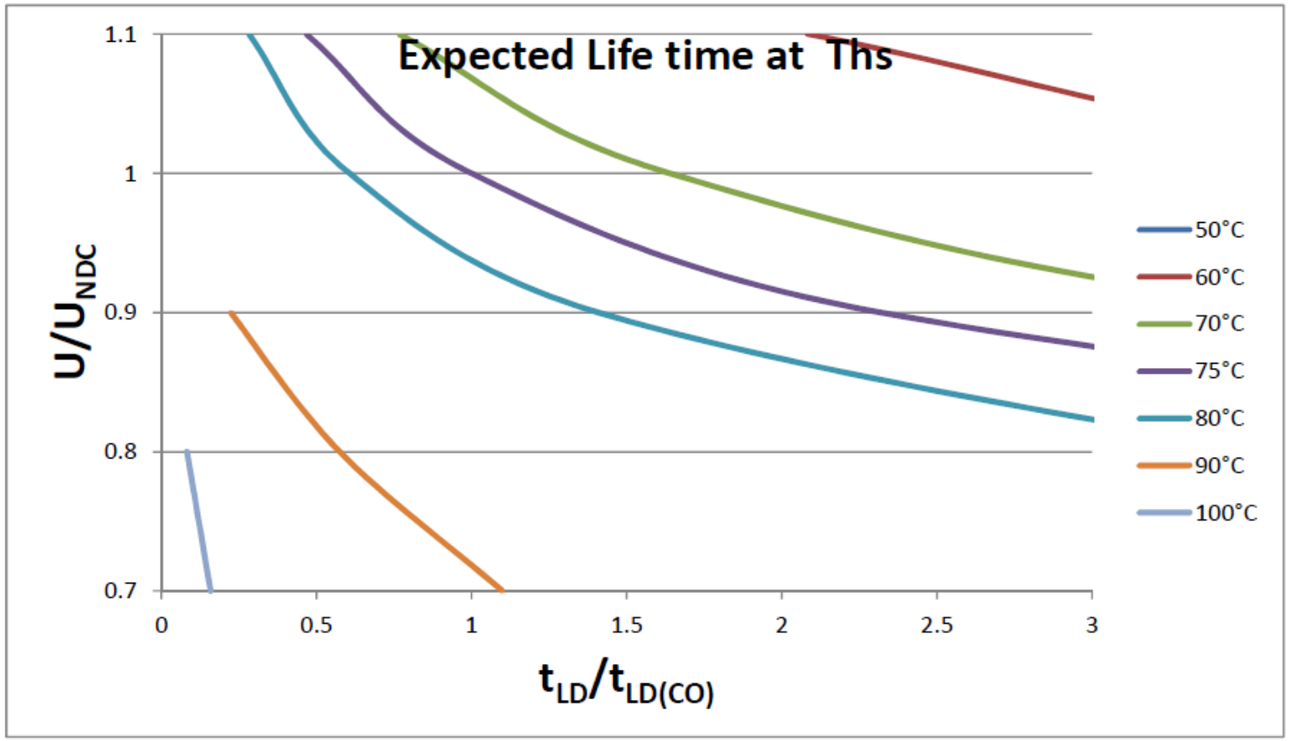


**Check with your supplier for these details. Have a clear mission profile of your application.**

# WHAT IS AN INVERTER

- Direct Current DC is converted to Alternating Current AC
  - Solar
    - DC from solar panels
  - UPS
    - DC from batteries
- AC converted to DC then back to AC
  - Wind turbine
  - Variable Frequency Drive (VFD)
    - Motor control
  - Induction heating
  - HVDC power transmission

# CAPACITORS FOR INVERTERS


High capacitance and very high ripple current capability needed for today's inverter designs for wind, solar, fuel cells, UPS systems, medical power and more.

High ripple current screw terminals and snap-in capacitors for critical power electronics applications.

Board-mount or direct-mount styles for maximum protection.

Oil filled types contain an environmentally friendly fluid and their built-in safety pressure interrupter ensures open circuit failure mode at end of life. Use axial type ACF for the same high-performance filtering where dry construction is preferred.

PSMA

CDÉ CORNELL DUBILIER
ENERGIZING IDEAS

# PRODUCTS FOR THE INVERTER

## DC Link Capacitors:
## Used for bulk storage and ripple filtering

Aluminum Electrolytic

OR

Power Film

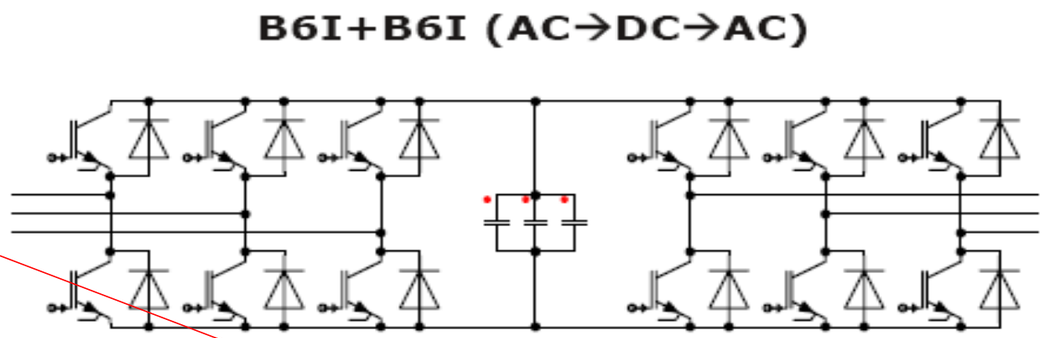


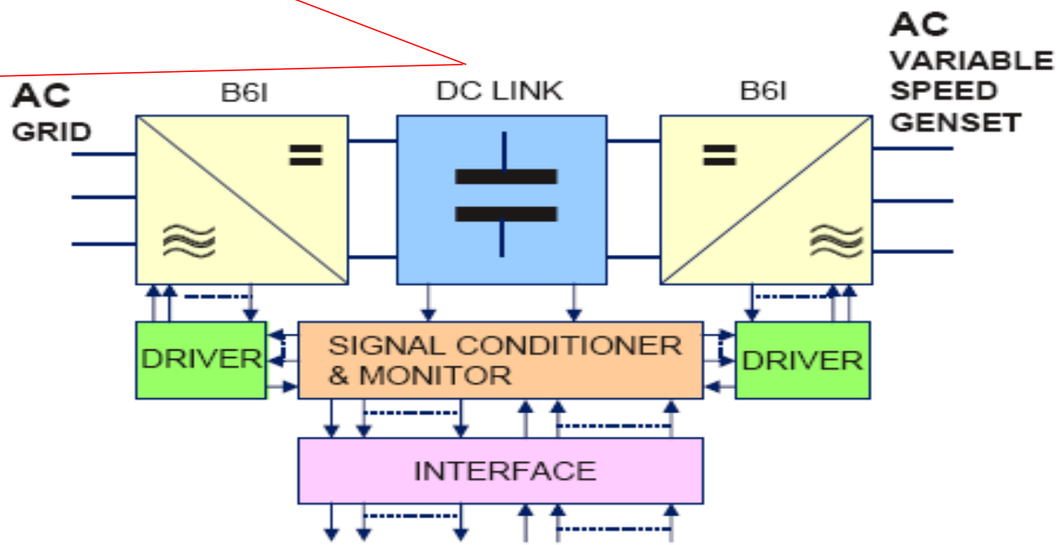

# SOLAR INVERTER

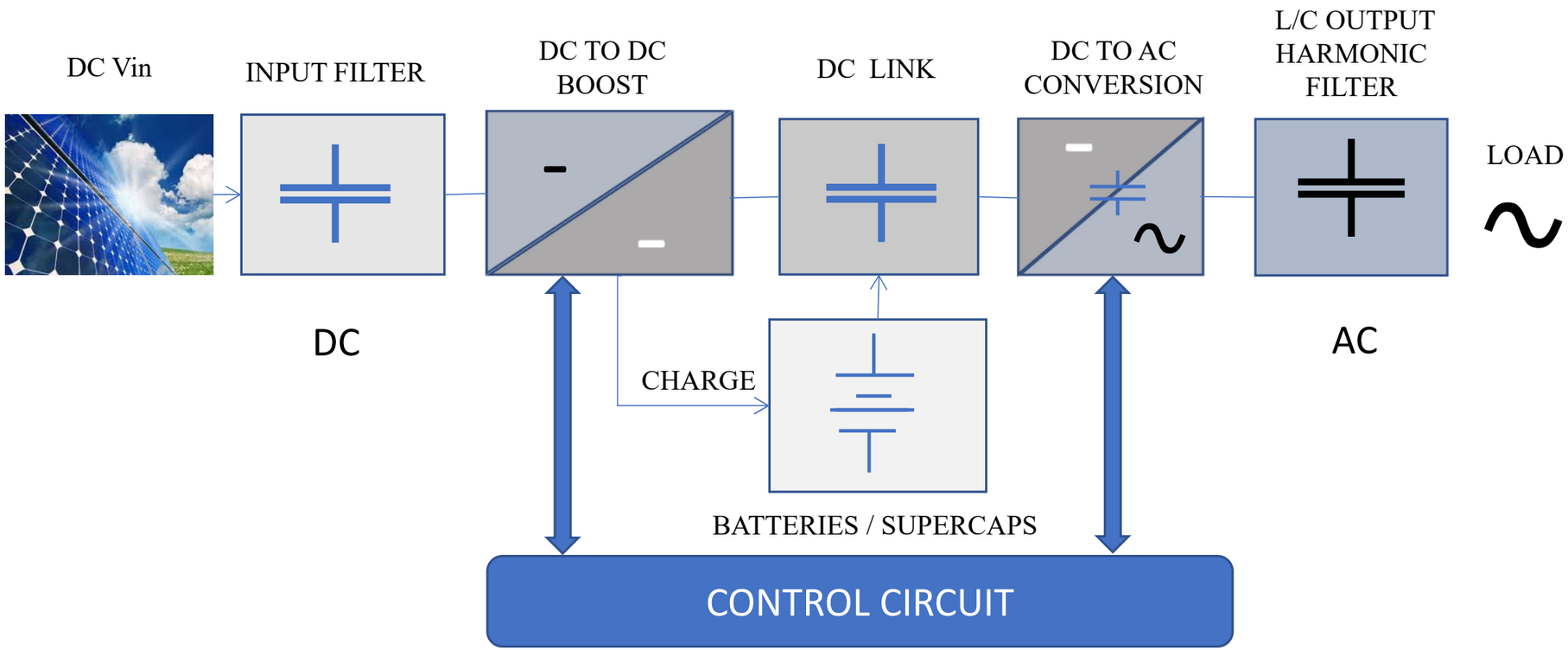


SCREW TERMINAL, POWER FILM, & PLUG IN

SNUBBER

SCREW TERMINAL, POWER FILM, & PLUG IN

SF, PC, PFCH, & ACF

# WIND TURBINE INVERTERS

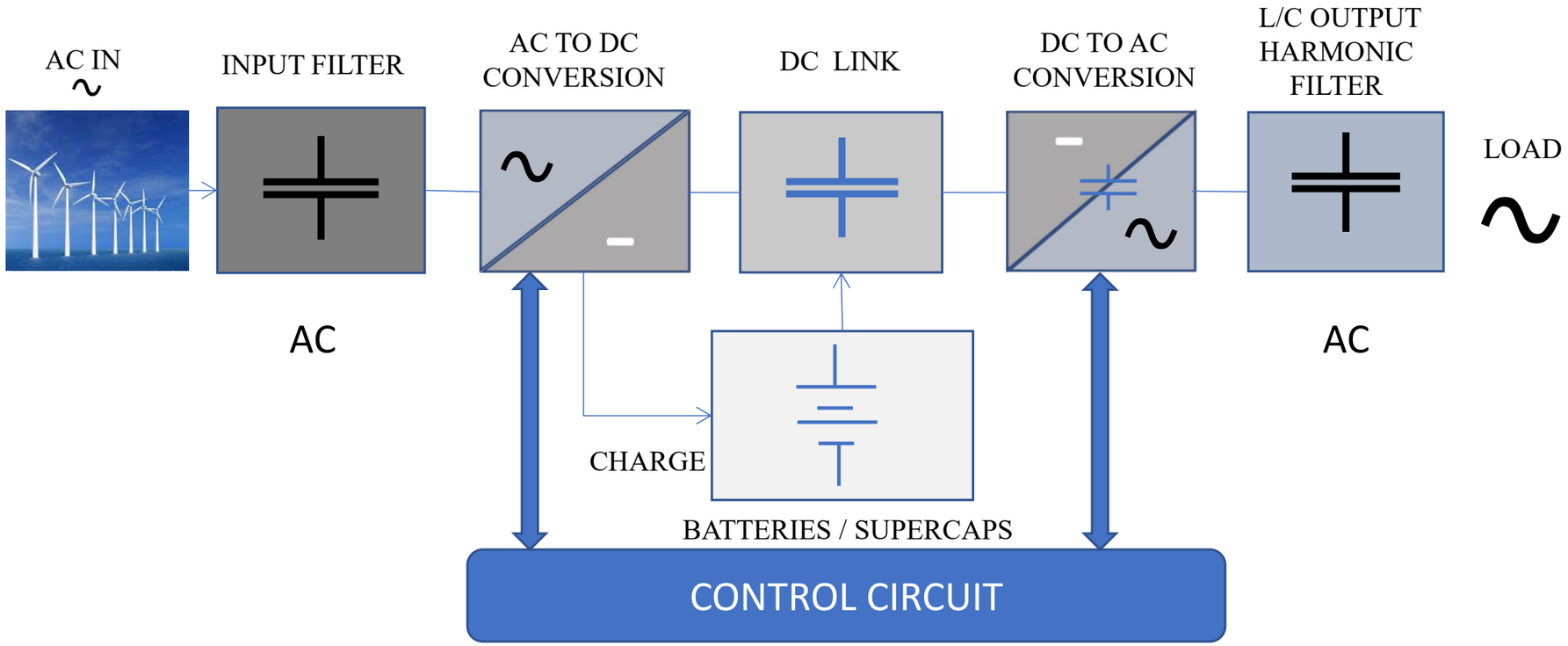


AC — SF, PC, PFCH, & ACF

DC — SCREW TERMINAL, POWER FILM, & PLUG IN

DC — SNUBBER

AC — SF, PC, PFCH, & ACF

# UNINTERRUPTIBLE POWER SUPPLY - UPS

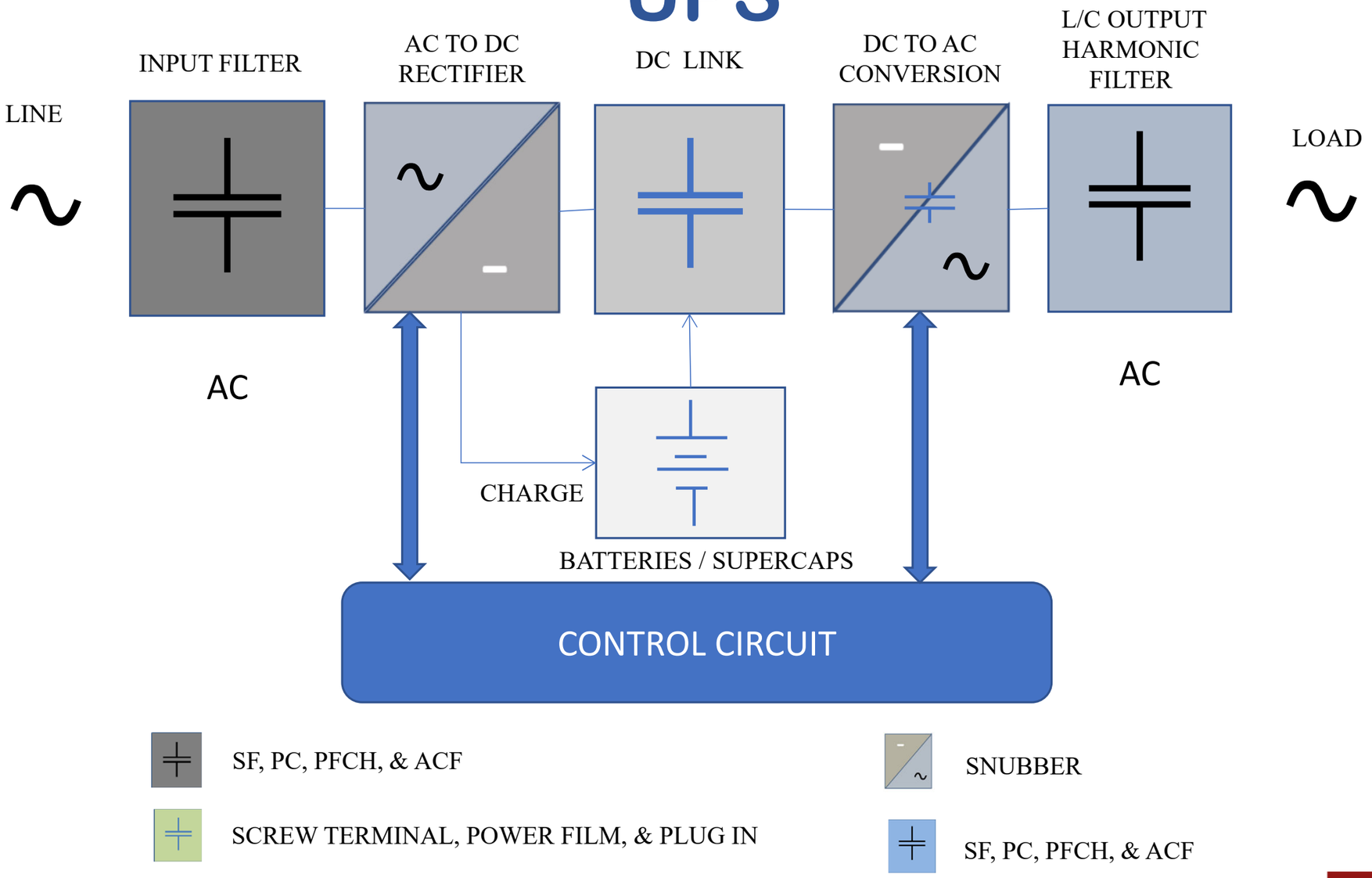

# DC LINK CAPACITORS

## DC LINK CAPACITORS: Film Versus Aluminum

| CHARACTERISTIC | ALUMINUM | FILM |
|---|---|---|
| Capacitance | High (3X Film) | Medium |
| ESR | 30 mΩ Typical | 2.0 mΩ Typical |
| Operating Temp Rating (with full ripple) | 105°C Max | 85°C Max |
| Ripple Current (1000 µF, 500 Vdc) @ 85C | 6.3 A | 3X-4X aluminum |
| Voltage | 550 Vdc | Up to 1500 Vdc. Eliminates the need for capacitors in series and balancing resistors. |
| Resistance to Overvoltage | 50 V surge | 1.5 X rated for 10 s |
| Failure Mode | rupture | fail open mode |
| Construction | Liquid Electrolyte | Dry, no liquid electrolyte |
| Polarity | Must observe polarity | Non-Polar |

# INVERTER DC LINK APPLICATION

- 60 Hz AC is rectified to “lumpy” DC (120 Hz)
- A smoothing - DC Link capacitor is placed between the rectifier and the inverter switch to smooth the voltage
- DC Link decouples the input from the output
- DC Link must also handle high frequency ripple resulting from inverter switching

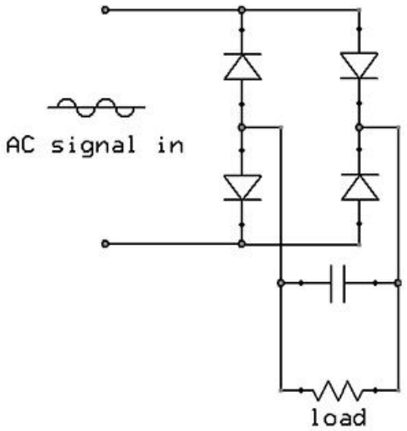


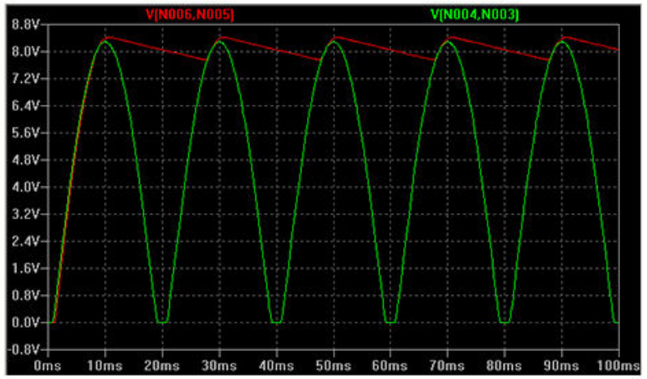

# ALUMINUM ELECTROLYTIC CAPACITORS

More Capacitance for the Buck

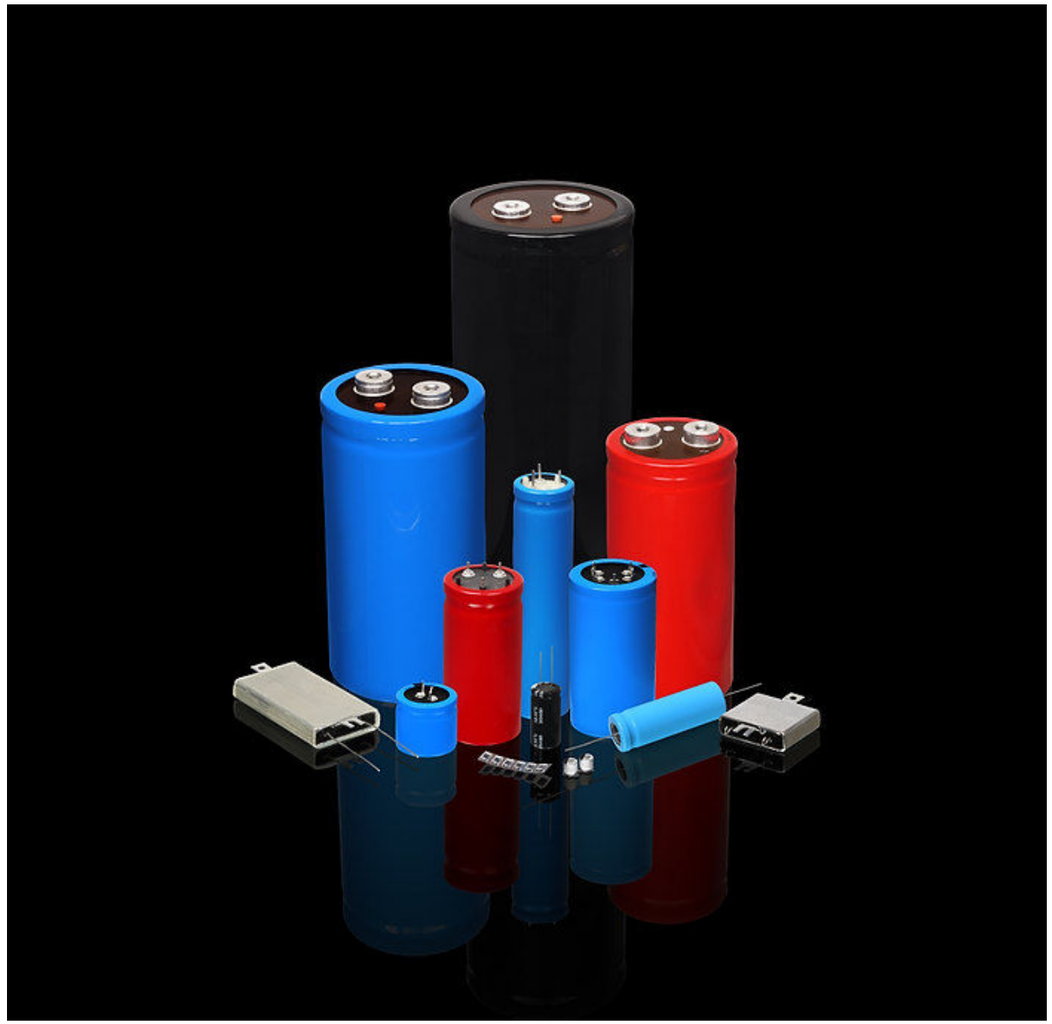

# ALUMINUM ELECTROLYTIC ADVANTAGE

- The high value capacitor choice
- Typically last more than 10 years
- Lower cost dielectric for high capacitance and energy storage
- 4 to 10 times the capacitance per dollar of film capacitors
- Great for power electronics bus capacitors up to 550 Vdc

# POWER FILM: DC LINK CAPACITORS

*More Ripple Current for the Buck*

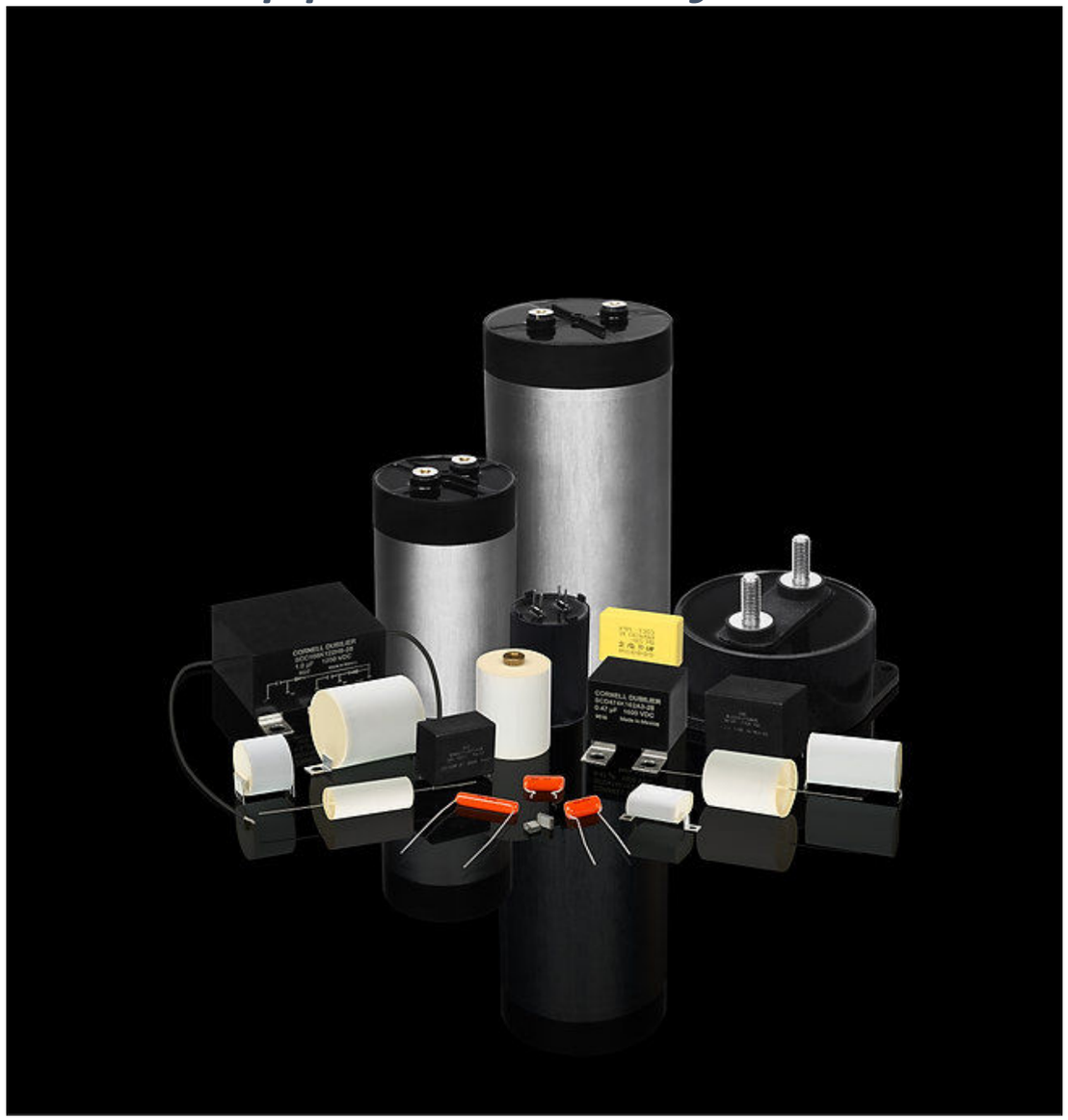

# POWER DC FILM ADVANTAGE

- The high ripple current capacitor choice
- Higher voltage than aluminum electrolytics - up to 1500 Vdc
- No need to place capacitors in series
  - Eliminates need for balancing resistors
- Dry construction – no electrolyte
- Non-Polar
- Self healing – open circuit failure mode

# IGBT SNUBBERS

**Discrete Axial Leaded Snubbers**

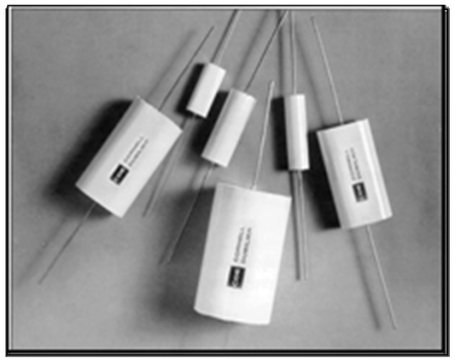

High dV/dt – 940C, 941C PPA, PPS
Very High dV/dt: 942C, 943C

**Radial Leaded Box Snubbers**


High dV/dt: PSB

**Direct Mount Snubbers**

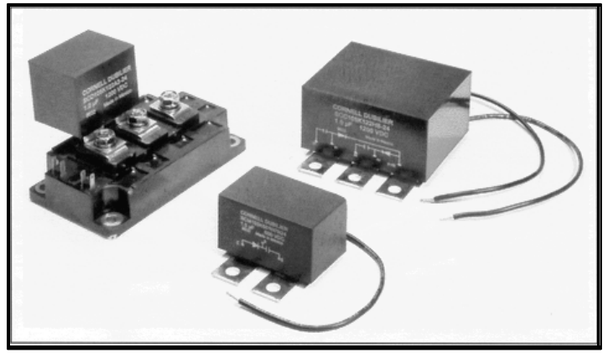

Capacitor Type: SCD, PMB, PMC
Clamp Type w diode: SCM
Dual Clamp Type: SCC

# WHAT'S AN IGBT

- IGBT – Insulated Gate Bipolar Transistor
- Power switch of choice for most inverter applications


Discrete IGBT

IGBT Module

# WHAT'S AN IGBT SNUBBER

The word snub means to rebuff, spurn, repulse, give someone the cold shoulder, shortened at the end.

IGBT Snubber: A device used to protect IGBT switches from overvoltage during turnoff.

During turn off, a voltage transient appears across the IGBT that may exceed its voltage rating. The voltage transient is proportional to the amount of stray inductance (L) and the rate in change in current with time.

$$V_{transient} = -L di/dt$$

# WHAT'S AN IGBT SNUBBER

IGBT snubbers are designed to protect IGBTs by reducing the voltage spike across the IGBT during turn-off.

A conservative rule of thumb is to use 1μF of capacitance for every 100A of IGBT.

# AC Film Capacitors

# WHY IS HARMONIC FILTERING NECESSARY

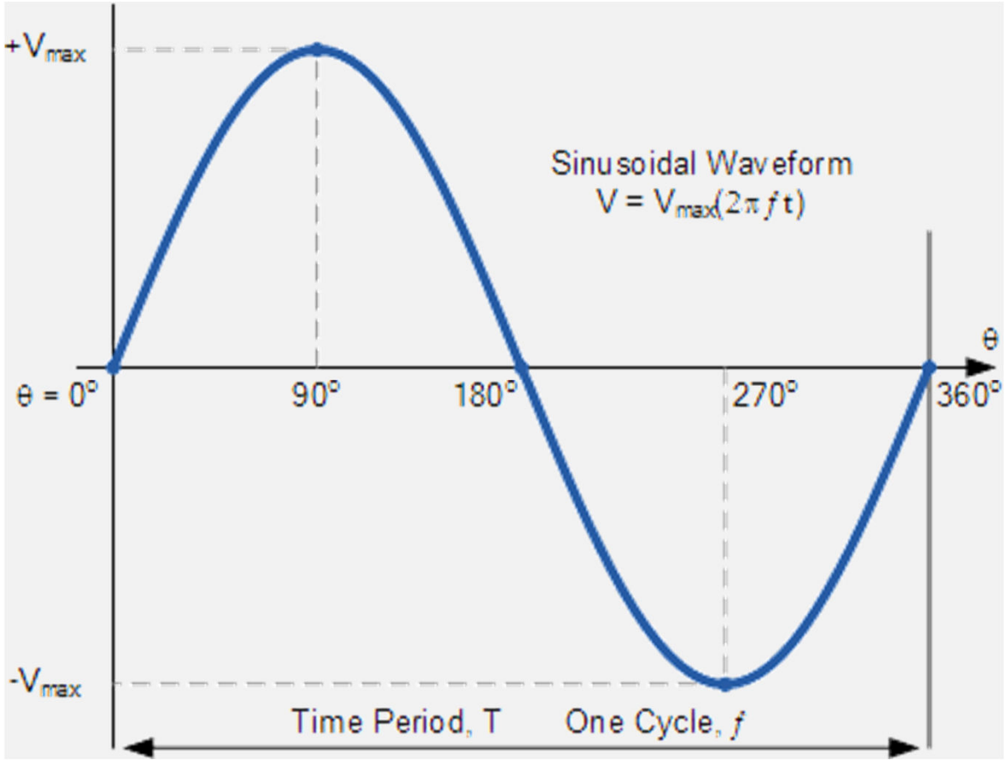


- Clean power required for electrical equipment to function properly
- Inverter switching schemes cause harmonic distortion of the input / output power
- Filters required to “clean” the power

# HARMONIC DISTORTION CAUSED BY INVERTER SWITCHING

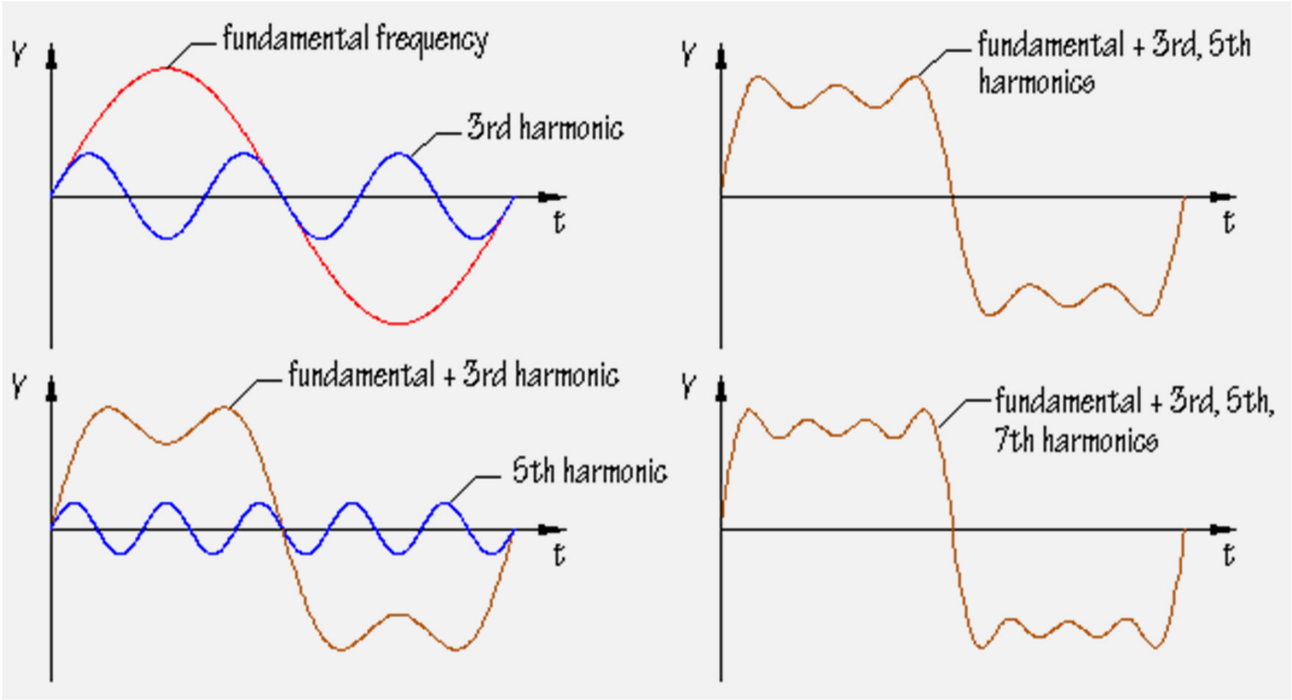


Inverter IGBT switching result in harmonics that are odd numbered multiples of the fundamental switching frequency ($3^{rd}$, $5^{th}$, $7^{th}$, etc.).

These harmonics combine with the fundamental frequency and cause distortion of the waveform.

# HOW DO AC OUTPUT FILTERS WORK

Block diagram of the DC link and filter components

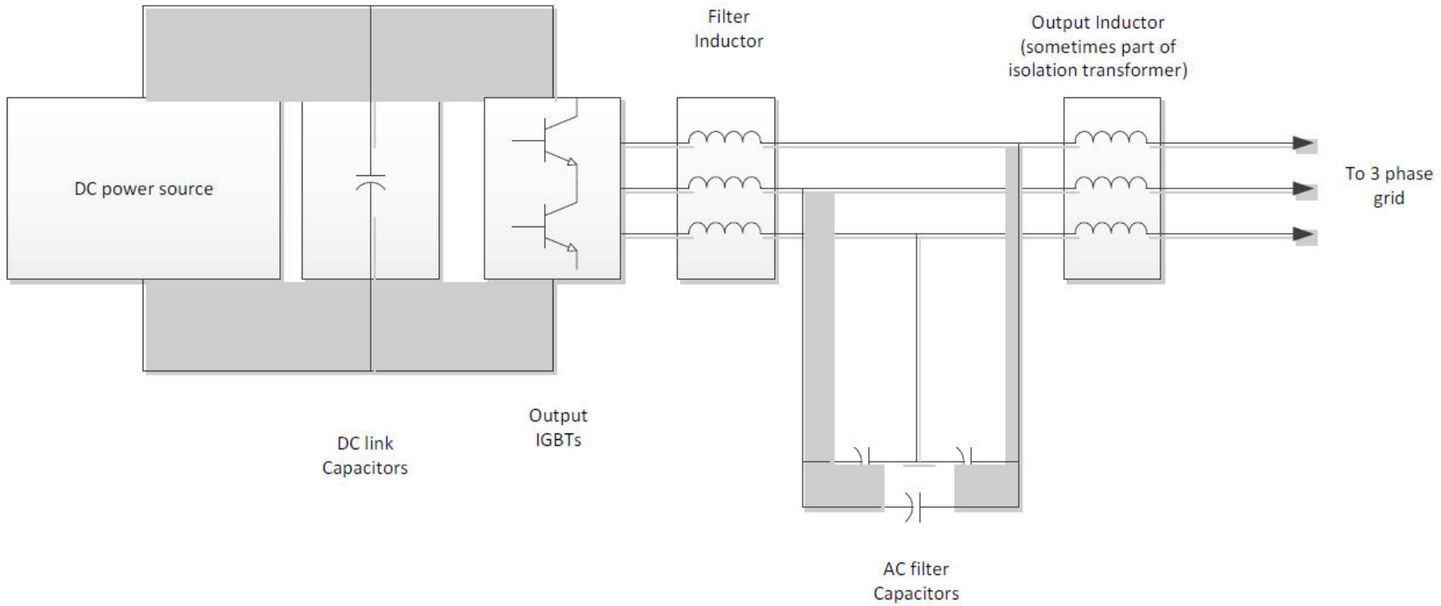


Grid tie inverters require filter components in two key areas:
The DC bus and AC output.

The AC output filter is a low pass filter (LPF) that blocks high frequency PWM currents generated by the inverter. Three phase inductors and capacitors form the low pass filters. Resonant filters are specifically designed (inductance and capacitance) to “tune” out the harmonic frequencies.

# EXAMPLE OF CUSTOMER SUPPLIED WAVEFORM AND FFT

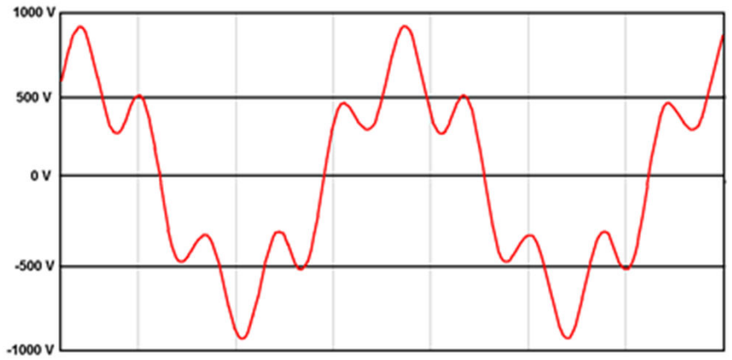


TYPICAL VOLTAGE ACROSS CAPACITOR WHEN USED ON 480 V SYSTEMS

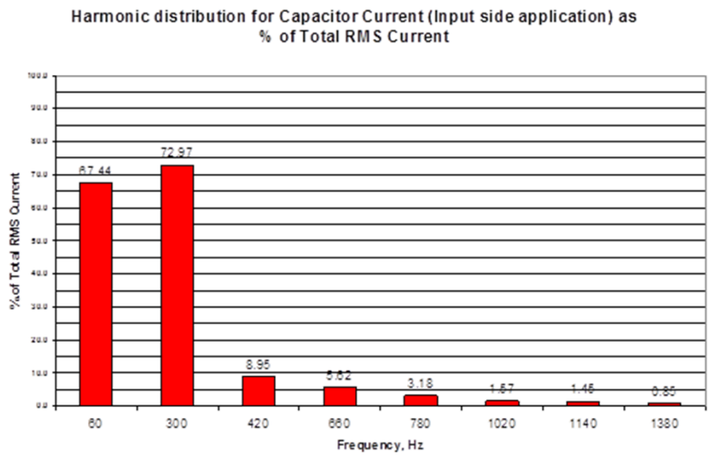


HARMONIC CURRENT DISTRIBUTION FOR 60 HZ

- Voltage waveform
- Harmonic content can increase peak voltages
- Peak voltages are typically higher than the fundamental voltage
- Dielectric thickness determined by peak voltage including harmonics
- FFT Harmonic current distribution
  - Fast Fourier Transform
- Each harmonic current contributes to capacitor heating
- Required to calculate power losses
- Harmonic frequencies can develop higher currents than fundamental frequency

This information required for capacitor design

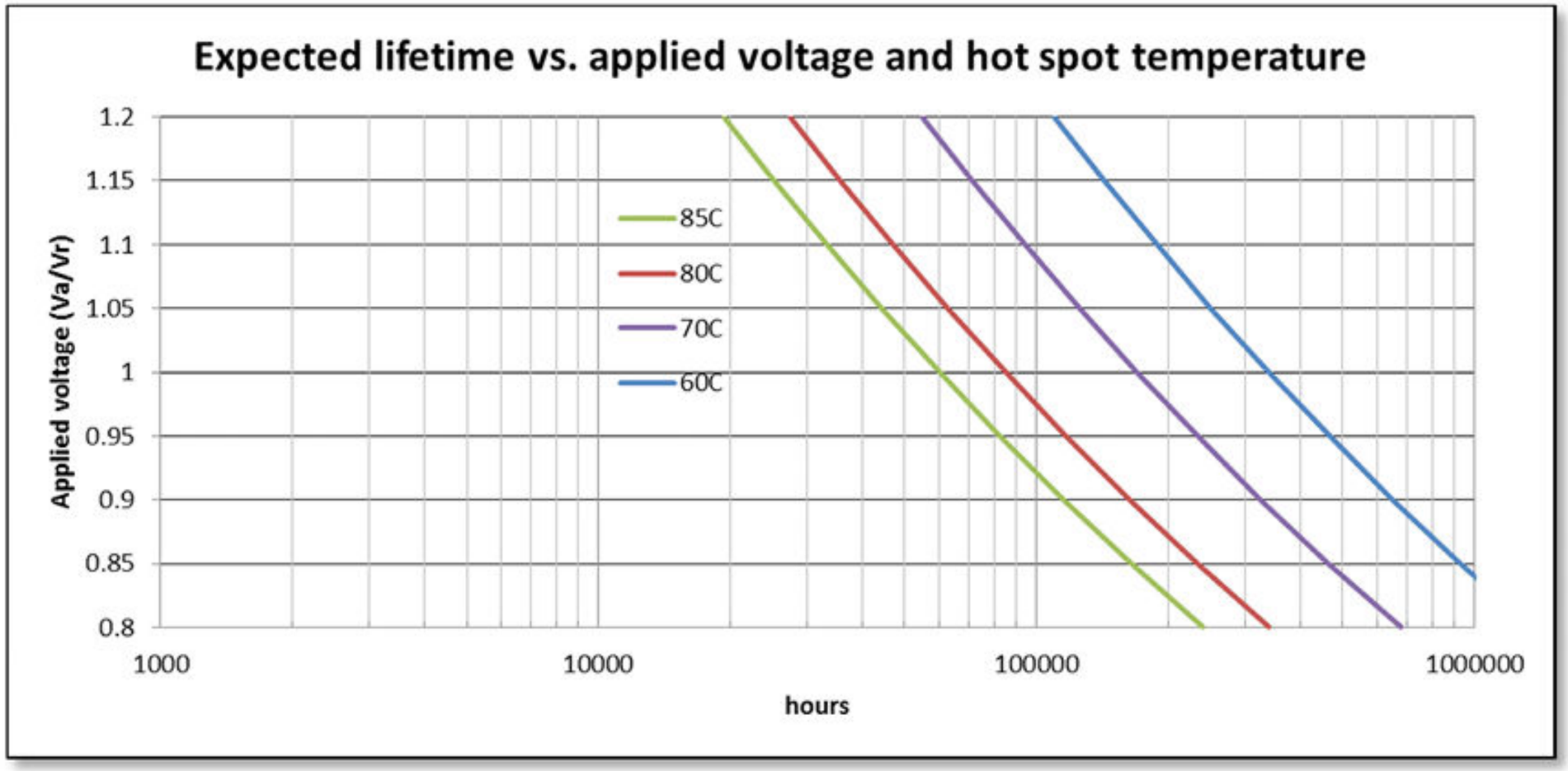
Expected lifetime vs. applied voltage and hot spot temperature
Applied voltage (Va/Vr)
1.2
1.15
1.1
1.05
1
0.95
0.9
0.85
0.8
1000
10000
100000
1000000
hours
85C
80C
70C
60C


The safety pressure interrupter is designed to disconnect the capacitor section as the cover expands upwards due to internal gas build up. Care must be taken at installation to provide a minimum of 0.5 inch clearance to allow for this expansion.

# Thank you

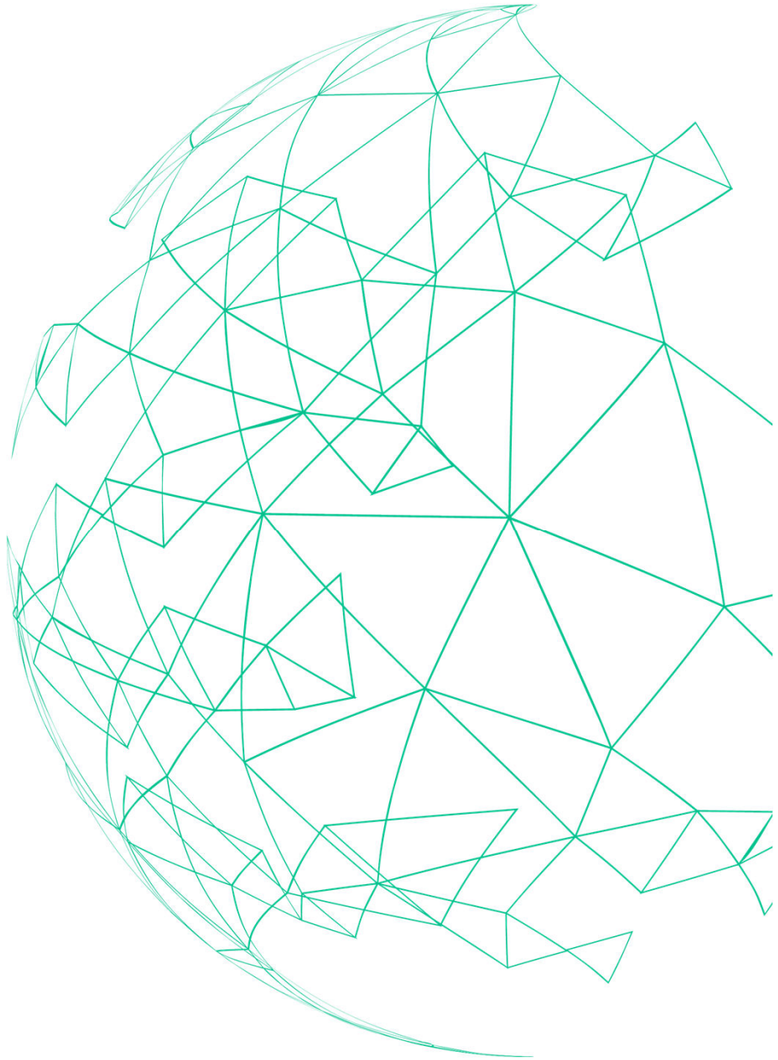

- www.psma.com