EPC
EFFICIENT POWER CONVERSION

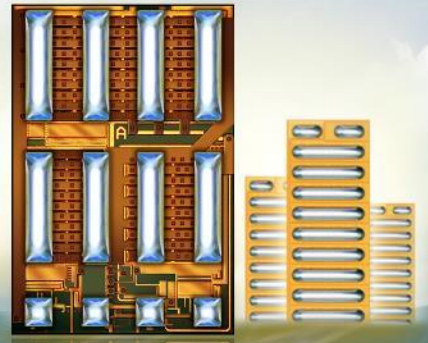

eGaN ICs and FETs Enable Next-generation Motor Drives for Robots, Drones, eBikes and eScooters

Alex Lidow

Agenda

- eGaN Technology Value for 48 V Motor Drives
- Key Applications
- GaN-based BLDC Motor Drive
  - Dead time elimination
  - EMI input filter reduction
- Product Portfolio for BLDC Motors

GaN Benefits in BLDC Motor Drives

GaN FET/ICs switch fast with $Q_{RR} = 0$

higher switching frequency

lower dead time

- Lower distortion → lower acoustic noise
- Lower current ripple → reduced magnetic loss
- Lower torque ripple → improved precision
- Lower filtering → lower cost, weight & size. *Can switch to ceramic capacitors*
- Smaller size enables incorporation into motor housing
- Supports low inductance, higher power density motors

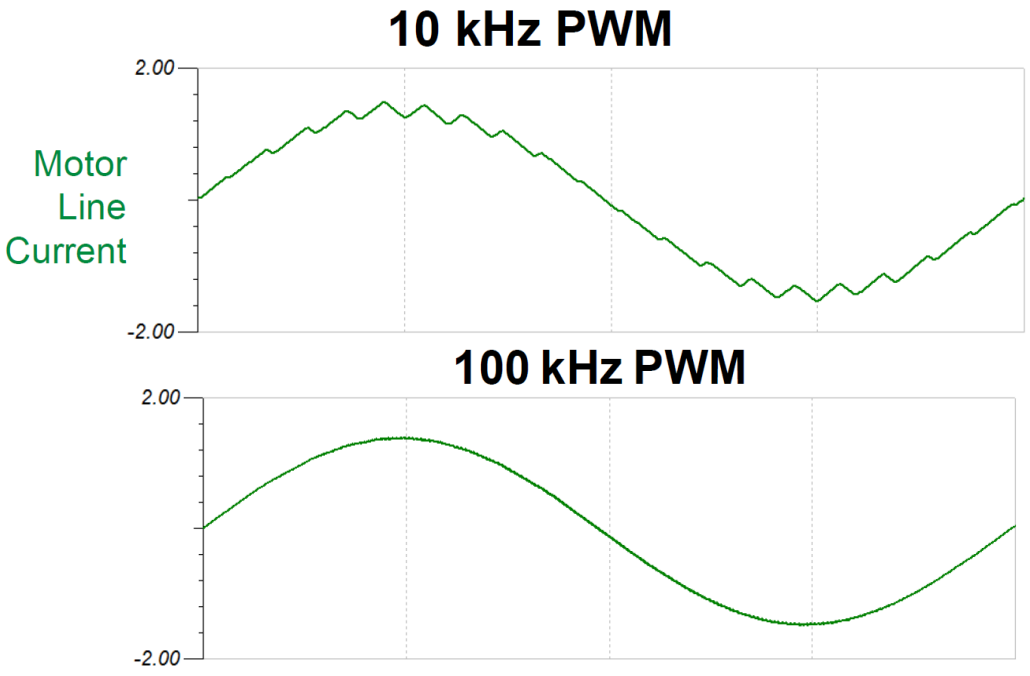

Cobot & Robot

Why GaN?

- High frequency for precision
- Small size and low weight
- Inverter integrated in robotic joint

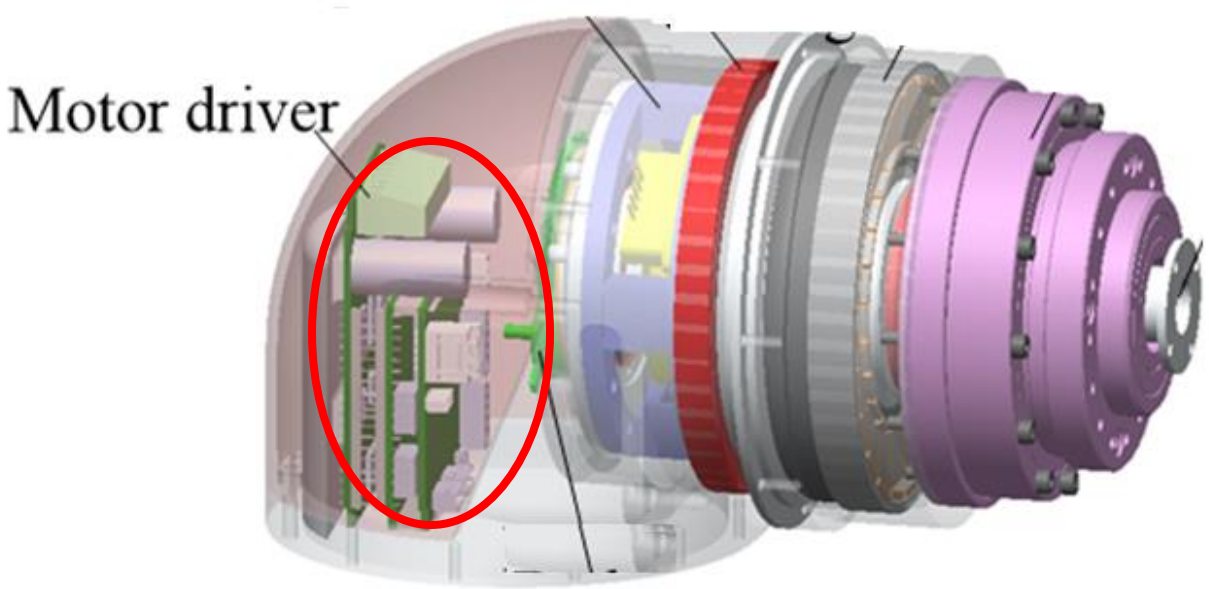

Drones

- Small size
- Lightweight
- Higher efficiency
  - Fly farther
- Ultra low inductance motors

Motor Drives for e-Bike & e-Scooters

Miniaturization enables better aesthetics & light weight

GaN-Based BLDC Motor Drive

The Integrated Power Stage

EPC2152

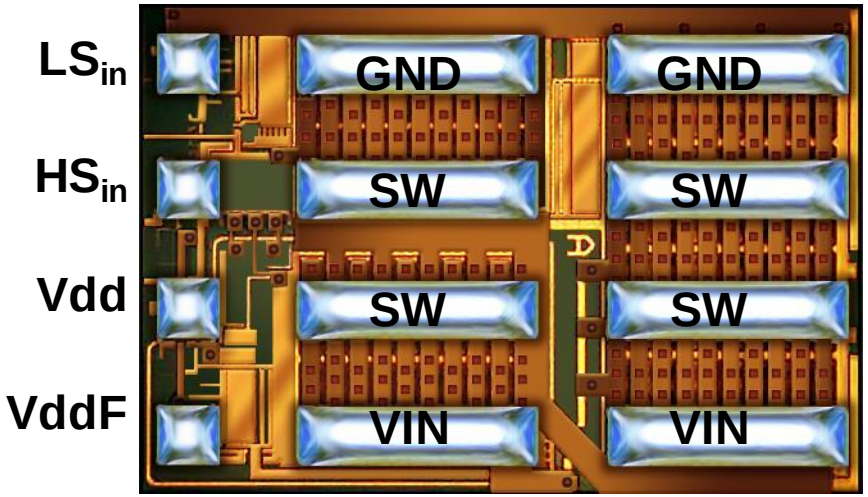

- Near zero common source inductance
- Driver matched to FETs
- Thermal balancing
- Layout friendly

80 V_{DSmax}, $R_{DS(on)\_typ}$ = 10 mΩ

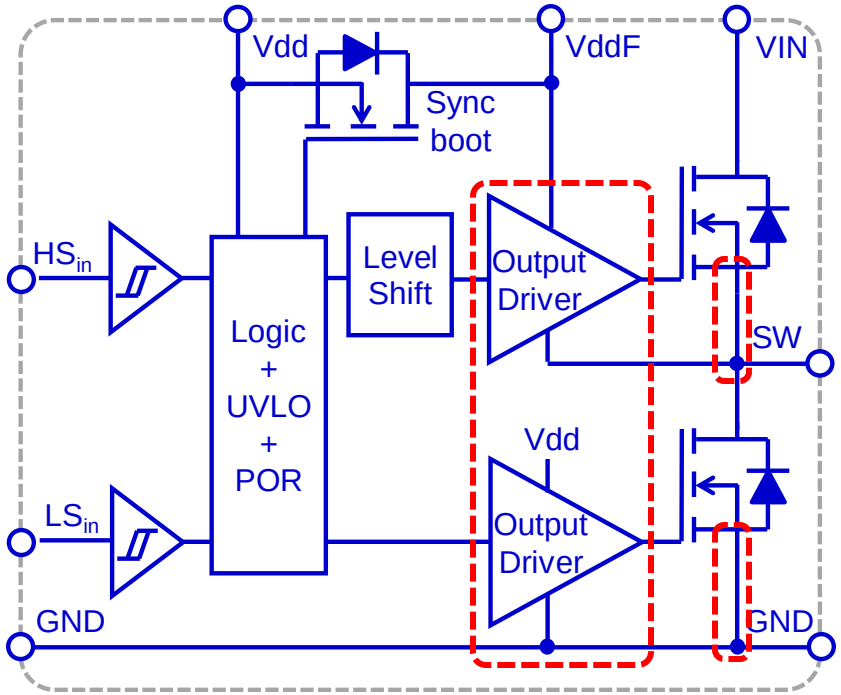

BLDC Motor Drive Overview

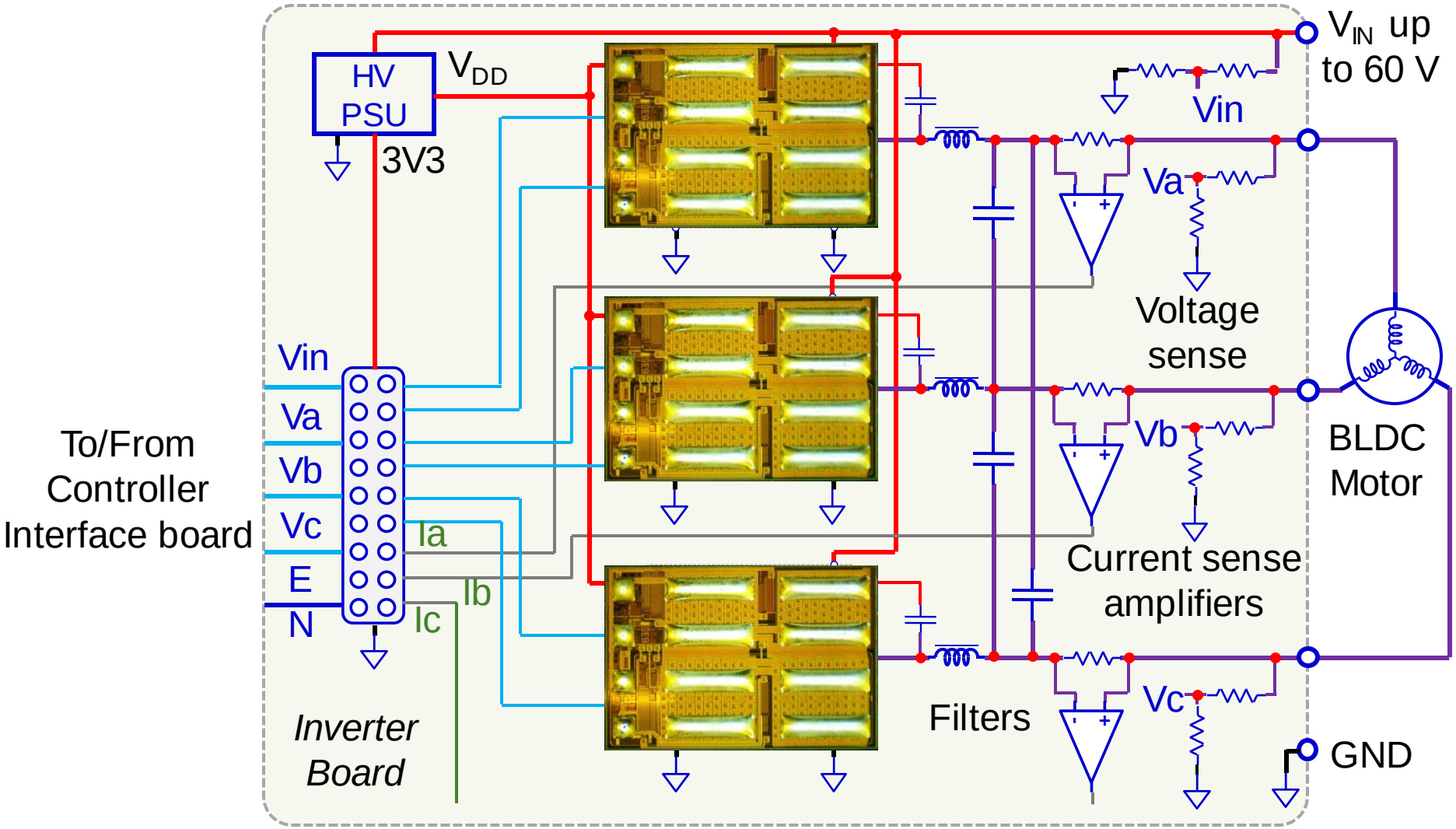

3-Phase Motor Drive

- 15 V – 60 V_{DC} supply
- 15 A_{peak} per phase
- Power a 400 W NEMA 34 Motor
- Measures 55 mm x 45 mm

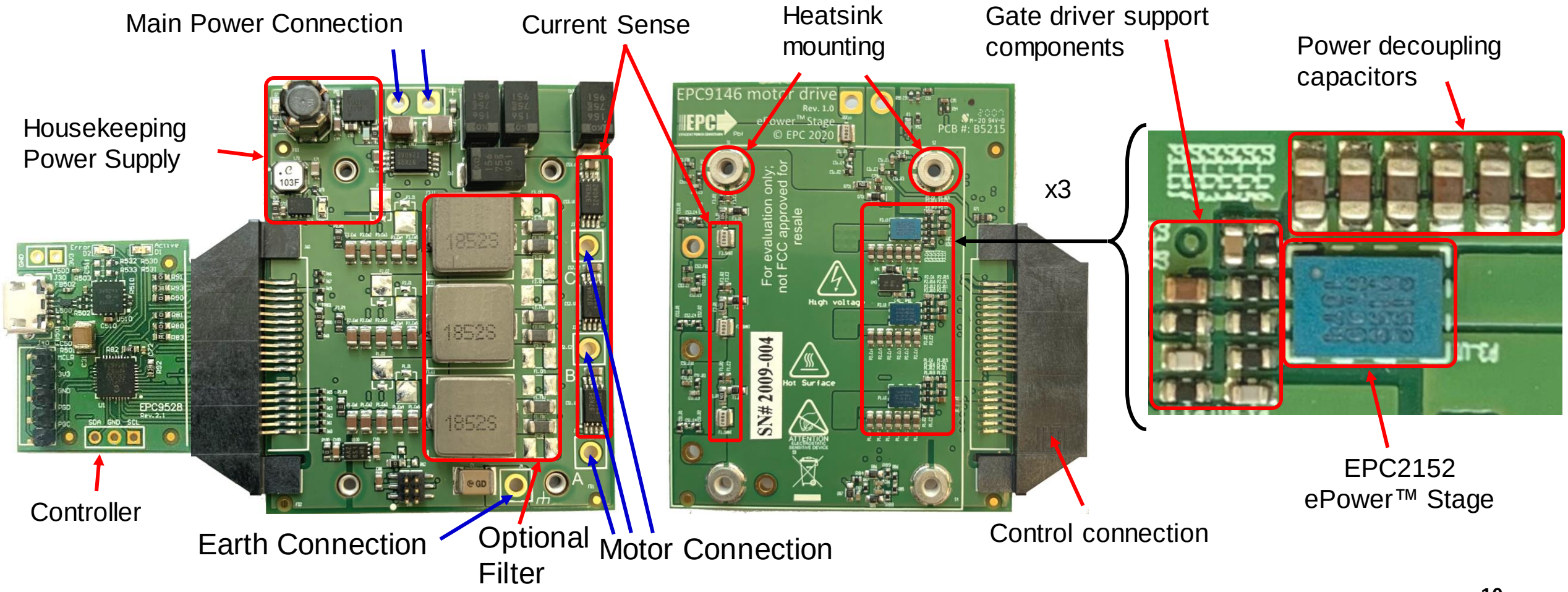

Dead time effect

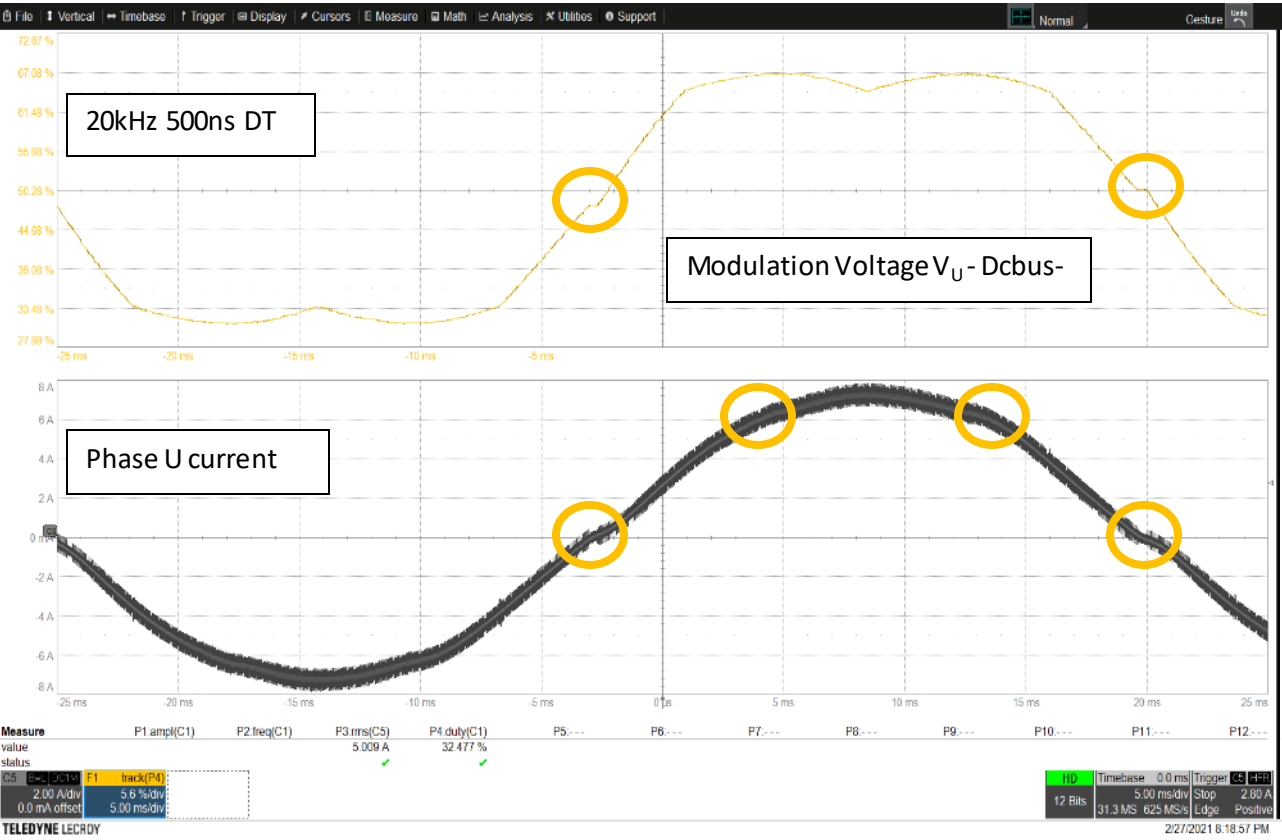

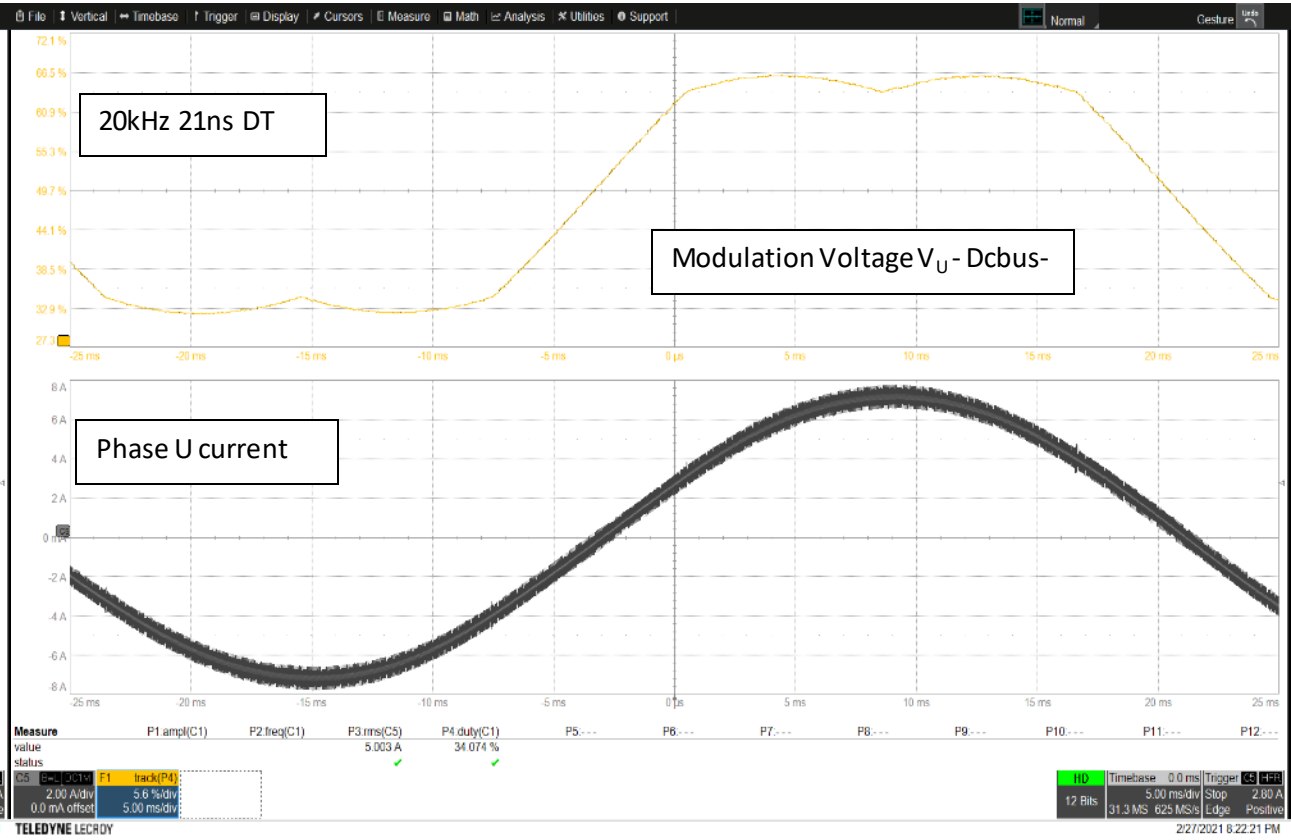

500ns dead time

21ns dead time

Vin 36 V_{DC} , 5 A_{RMS} Motor phase current

EMI Input Filter Reduction in GaN-Based BLDC Motor Drive

DC Integrated Motor

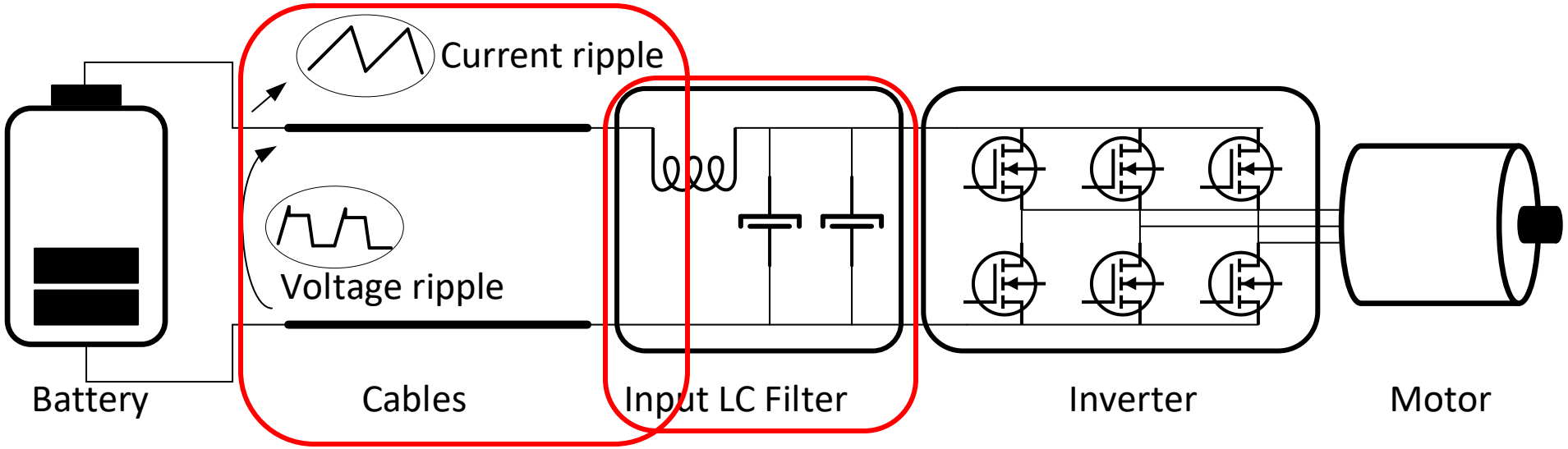

RMS Current in DC Capacitor

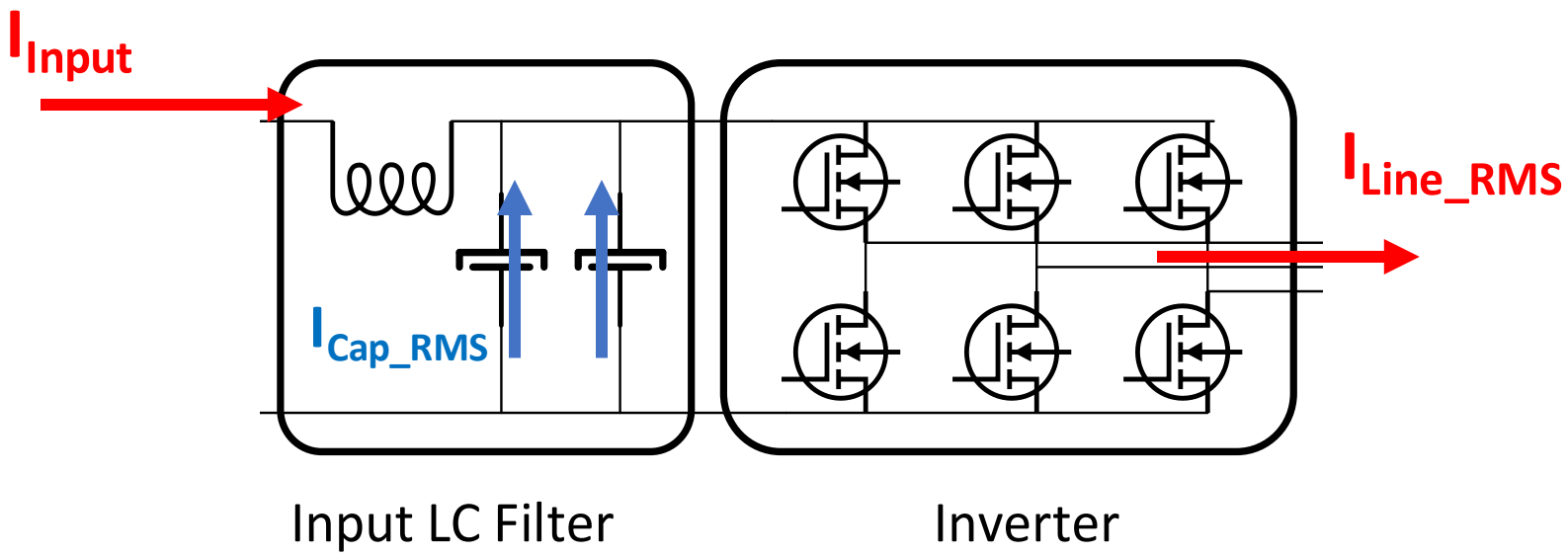

The max RMS current flowing in the DC capacitors is proportional to the max line current in motor phase:

$$I_{Cap\_RMS} \approx 0.65 \times I_{line\_RMS}$$

DC Capacitors Technology

- In a motor inverter the RMS current flowing in the input capacitor does not depends on PWM frequency
- Input voltage ripple is inversely proportional to PWM frequency and capacitance

$$I_{Cap\_RMS} \approx 0.65 \times I_{line\_RMS}$$

$$\Delta v_{pp} \propto \frac{1}{4 f_{sw}} \frac{I_0}{C_f}$$

- Electrolytic capacitors are sized with **RMS current** -> they are over-sized and their value does not change with PWM frequency

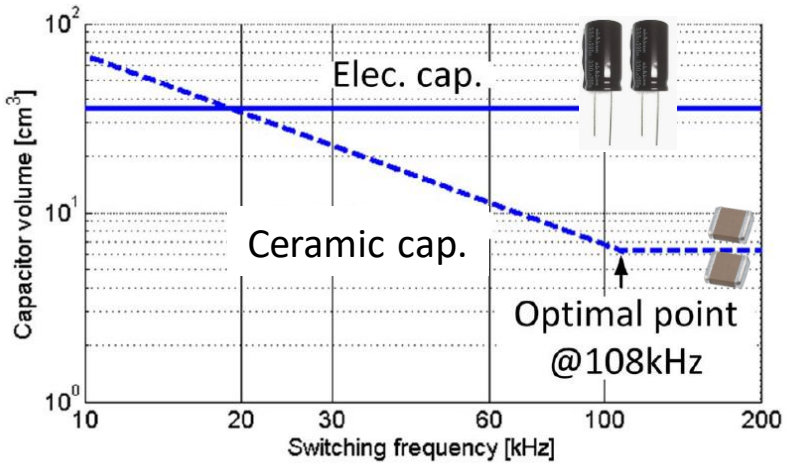

- Ceramic capacitors are sized with **voltage ripple** -> they are sized as per minimum required capacitance and their value and size decreases with increasing PWM frequency
- The optimum ESR of ceramic caps is at 100kHz

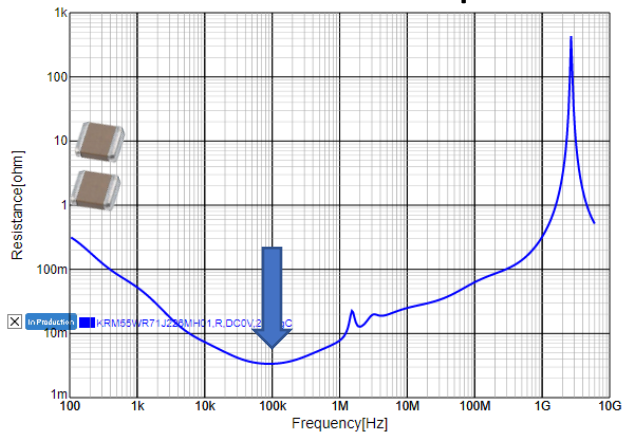

Experimental Setup

Setup	Setup 1	Setup 2
	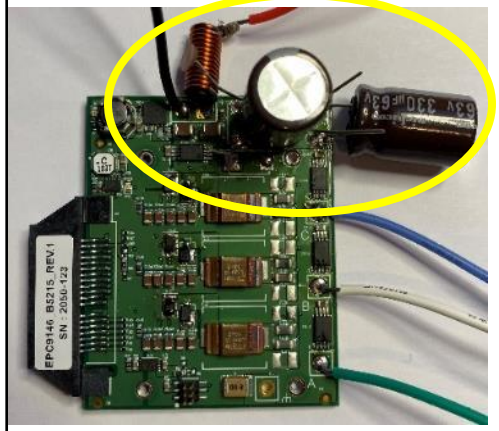	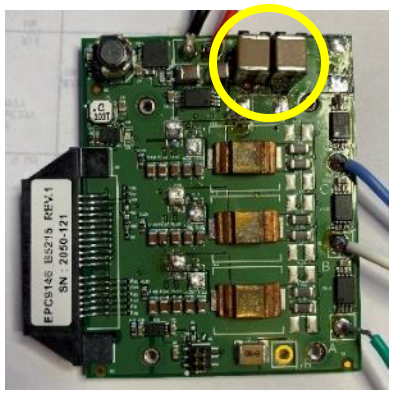
PWM Frequency	20 kHz	100 kHz
Dead time	500 ns	21 ns
Input Caps	2 x 330 µF electrolytic	2 x 22 µF ceramic X7R
Input inductor	1 x 2.7 µH	None

Input Voltage and Current Ripple Comparison

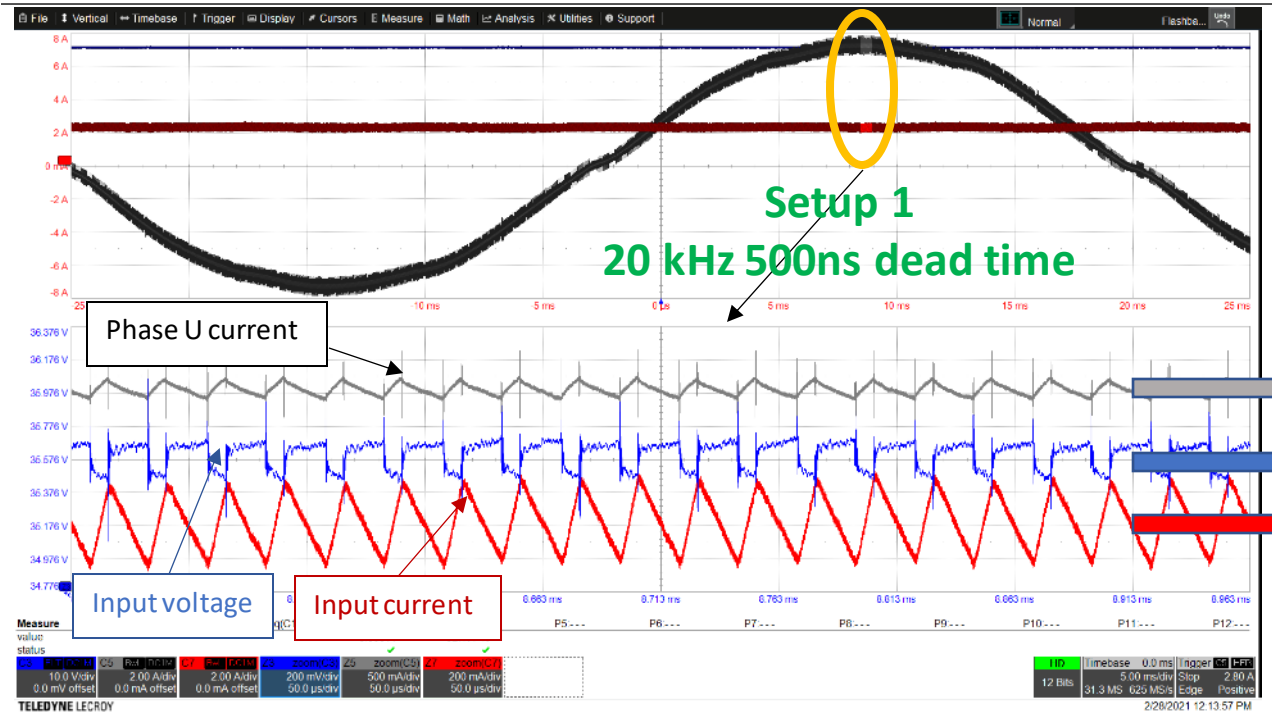

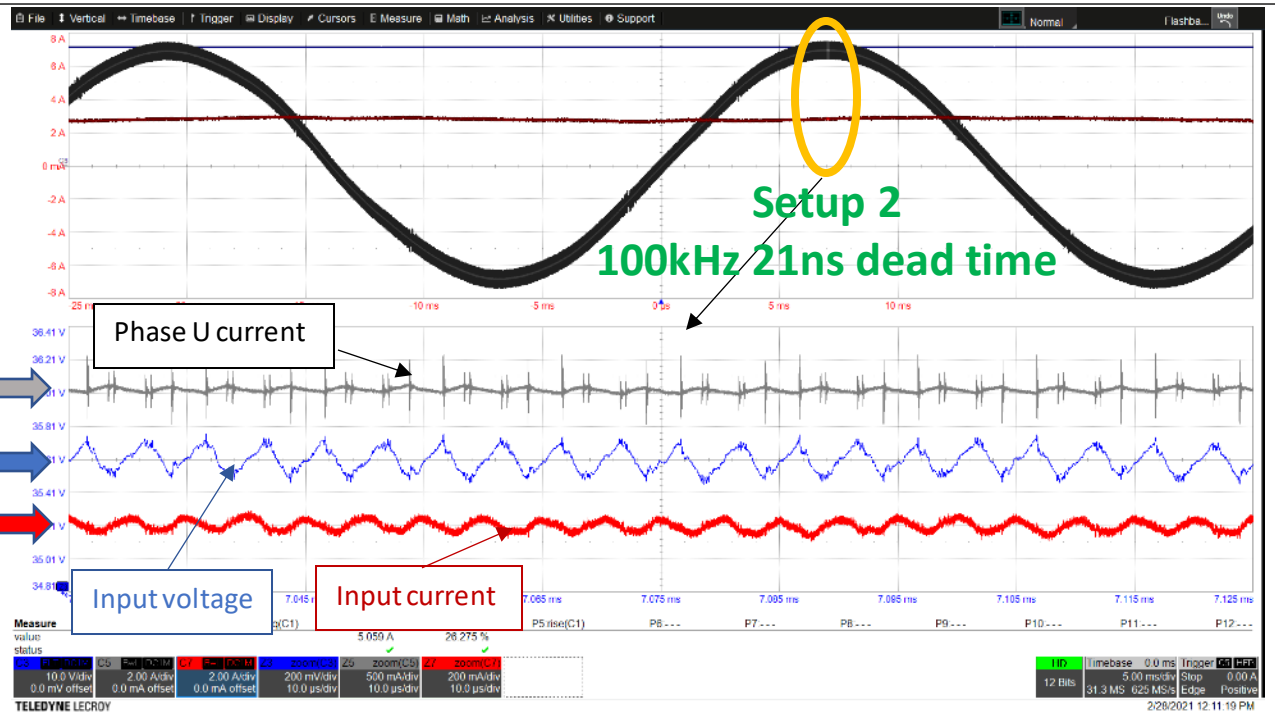

36Vdc – 5Arms motor phase current

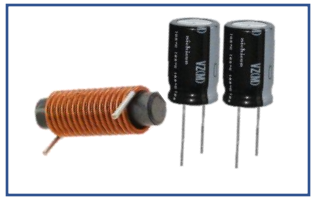

Original LC input filter
2.7µH + 660µF

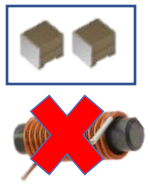

Ceramic capacitors
44µF

Effect of higher PWM frequency

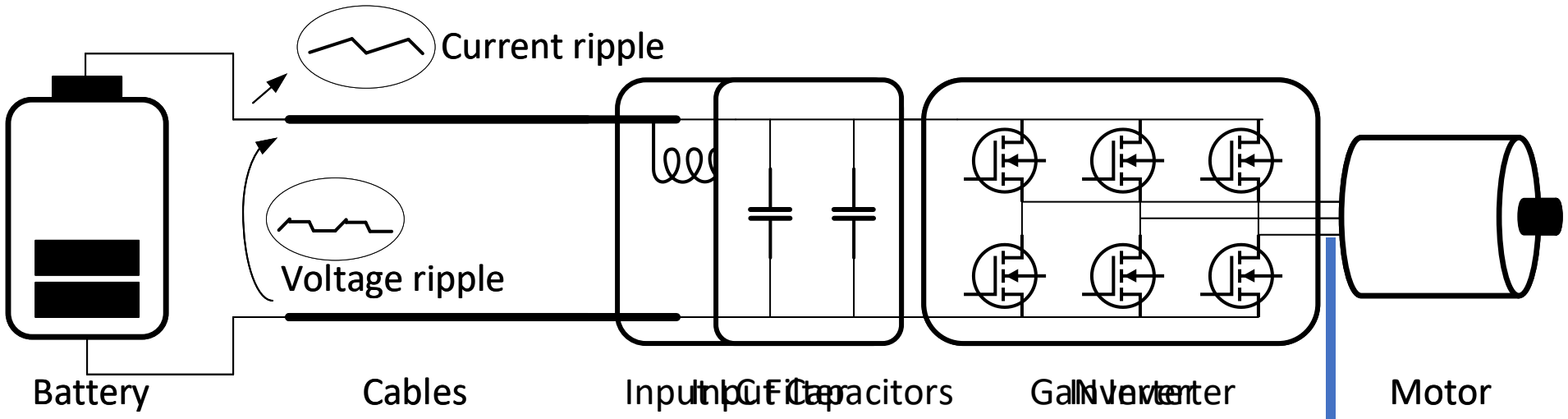

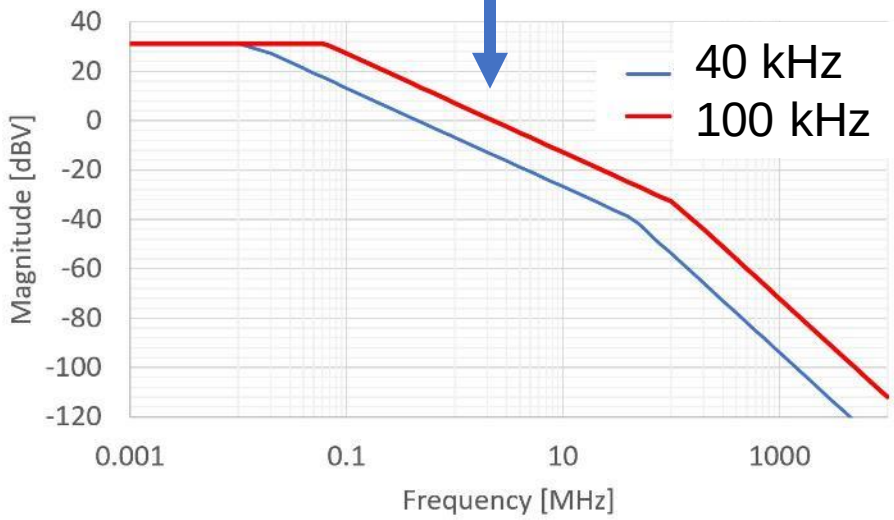

GaN Products for BLDC Motors

Integrated Solutions

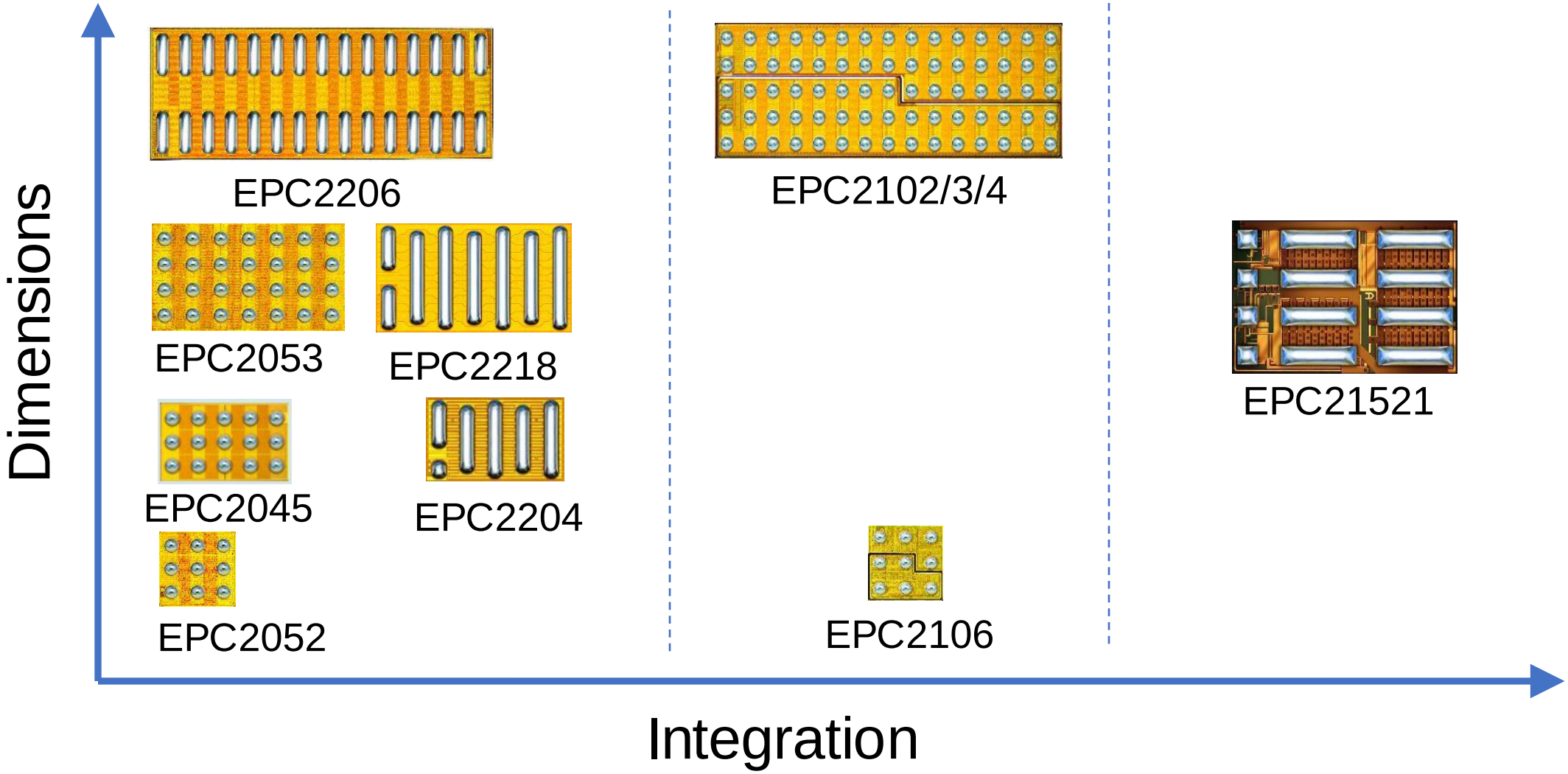

Summary

- EPC devices allows smaller, lighter, quieter and more accurate motor drives
- Given same $R_{DS(on)}$, EPC eGaN devices
  - Are smaller
  - Have lower switching dissipation
  - Have no reverse recovery
- ePower™ Stage Digital In and Power Out family simplifies design and will further reduce size

EPC
EFFICIENT POWER CONVERSION

How To GaN Video Series

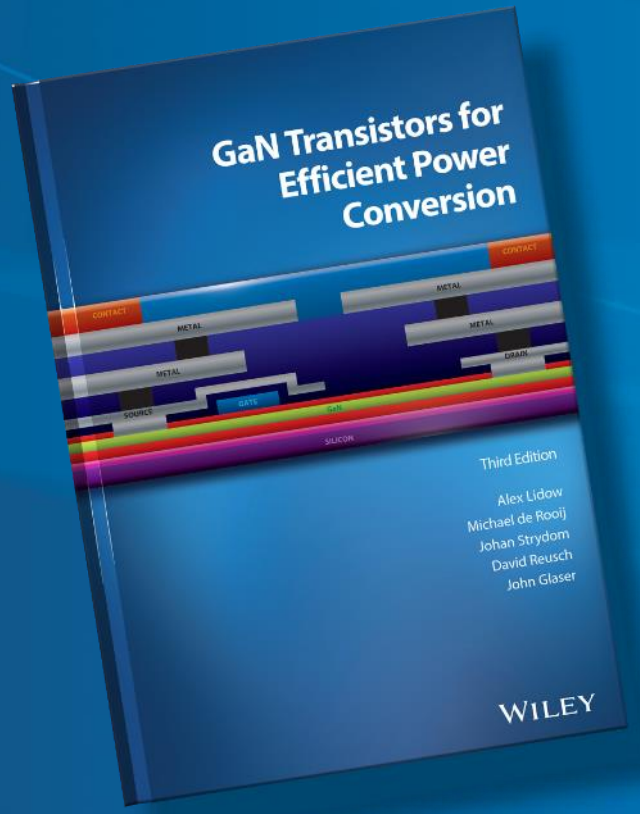

3rd Edition Textbook

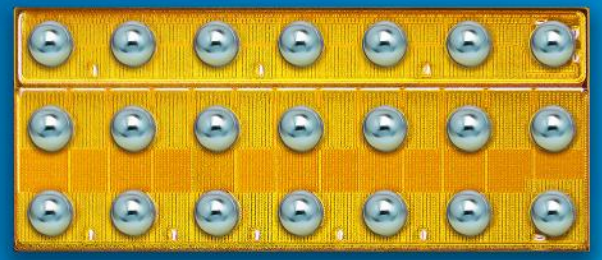

eGaN® FETs and ICs

Evaluation Kits

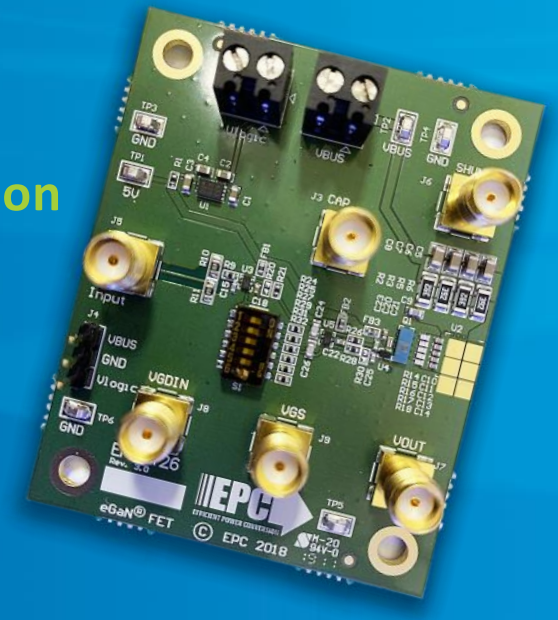

epc-co.com