# Validation of cmc with BsT-pulse

JC Sun
Bs&T Frankfurt am Main GmbH

psma magnetics workshop
June 2021 in Phoenix



Bs&T Frankfurt am Main
Hannah Arendt Str. 36
60438 Frankfurt am Main

# JC and his...

- physicist & engineer
- make and design ferrite 3Cx and 3Fx

FERROXCUBE
A YAGEO COMPANY

- sales amorphous metals 2605/2714/2705

Metglas®

- marketing nanocrystalline 500F components

VAC
VACUUMSCHMELZE

- Bs & T Frankfurt am Main GmbH

Bs&T Analyzer

## Content

- emi choke (**common** & *differential* mode)
- Validation of choke is problem
- BsT-Pulse damping oscillation delivers the choke feature
- Example (nanocrystalline common mode choke)
- Conclusion
- Annex (alloyed cored *differential* mode choke)

# Bs & T Analyzer I

## Sinus Magnetization AC

high excitation

*IEC 62044-3*

loss, $\mu_a$ driven by B mode

$B_{peak}$, loop driven by H mode

low excitation

*IEC 62044-2*

## Pulse Magnetization

fast transit of magnetic state

dB/dt

*IEC 60367-1 Annex G (393 IEEE)*

DC superposition

### BsT-Pro

**loss map** (f, B, T, $H_{DC}$)

$\mu_{rev}$ (f, B, T, $H_{DC}$)

major, and biased minor loop

### BsT-Pulse

**differential** and **amplitude L**,

energetic L, power loss i.e. Q factor

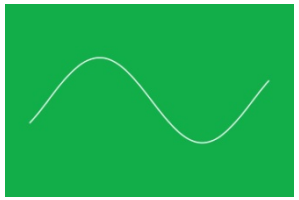

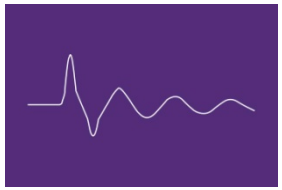

# Bs & T Analyzer II

## Pulse Magnetization

fast transit of magnetic state

dB/dt

Damped oscillation

BsT-Pulse

differential and amplitude L

energetic L, power loss

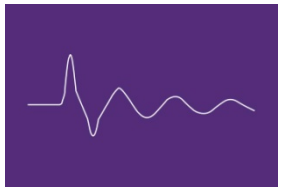

## Square Wave

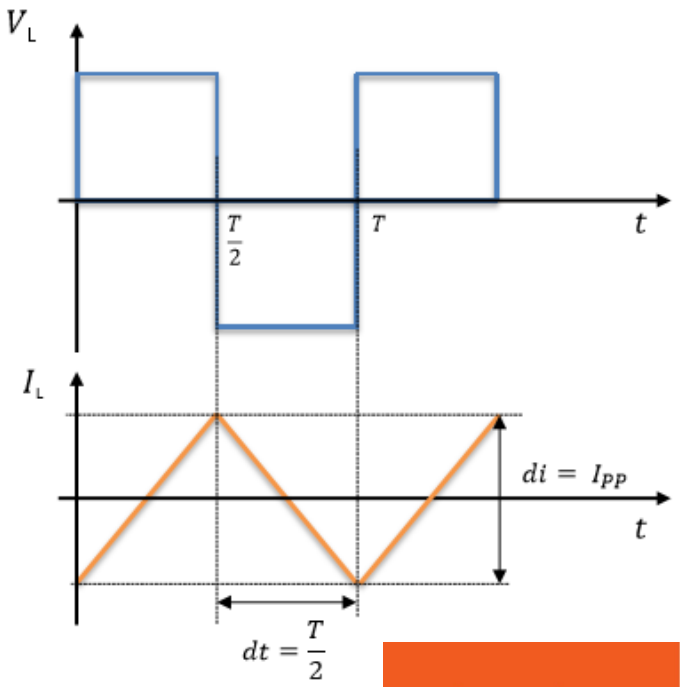


bipolar pulse magnetization

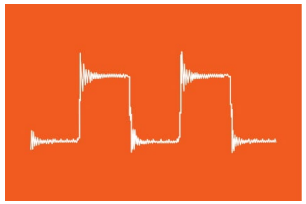

# Filter – choke – common/differential mode – magnetics

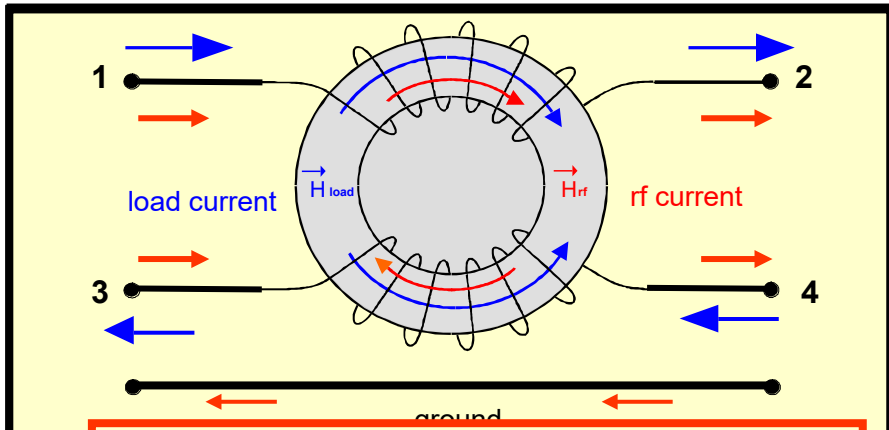


equal no. of turns wound in opposite direction

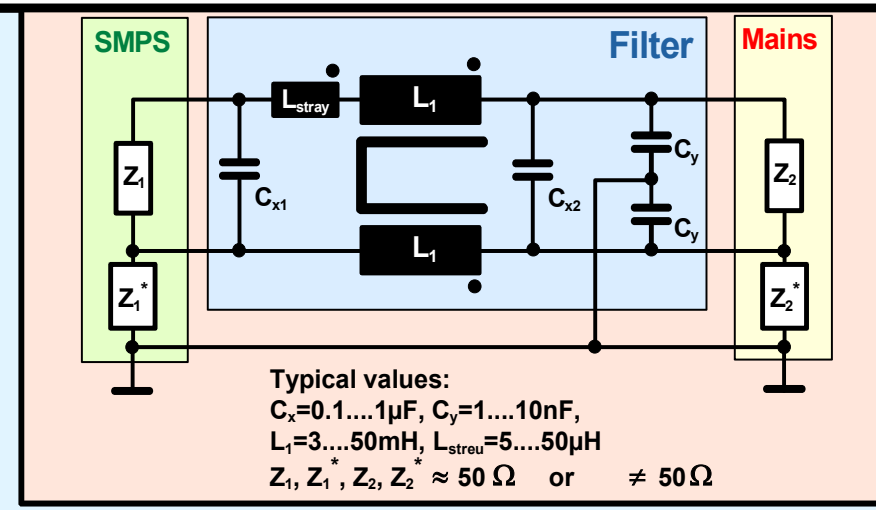


Typical values:
$C_x$=0.1....1µF, $C_y$=1....10nF,
$L_1$=3....50mH, $L_{streu}$=5....50µH
$Z_1$, $Z_1^*$, $Z_2$, $Z_2^*$ ≈ 50 Ω or ≠ 50 Ω

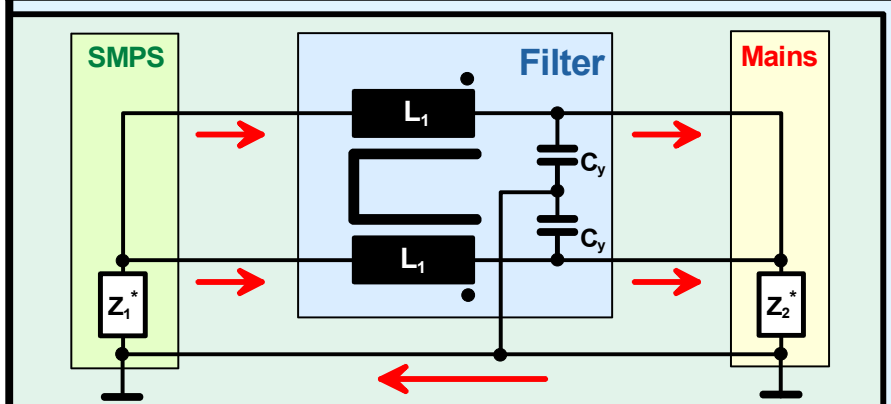


Common Mode (asymmetric)

strong „common-mode“ attenuation

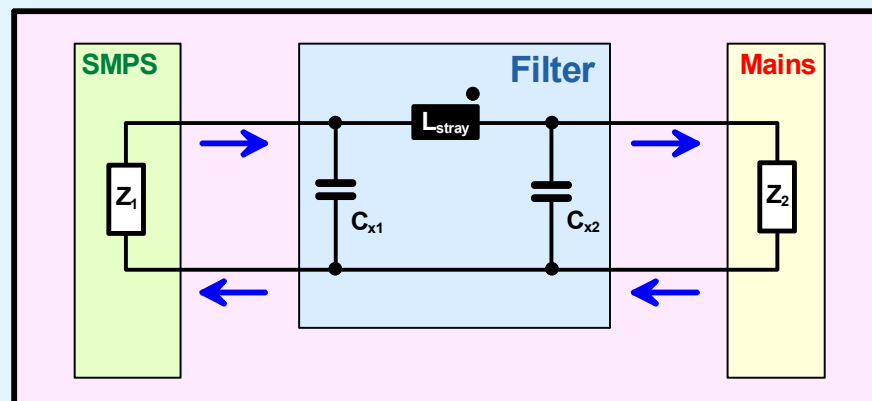


Differential Mode (symmetric)

slight „differential mode“ attenuation

$\mu$ and $B_s$ must be safe against unbalanced currents!

# Model of choke

**Insertion loss $a_E$** $\longleftrightarrow$ $|Z| = \sqrt{(\mathrm{Re}(Z))^2 + (\mathrm{Im}(Z))^2} \approx \sqrt{R_{s,core}^{\;2} + (\omega L_{core})^2}$

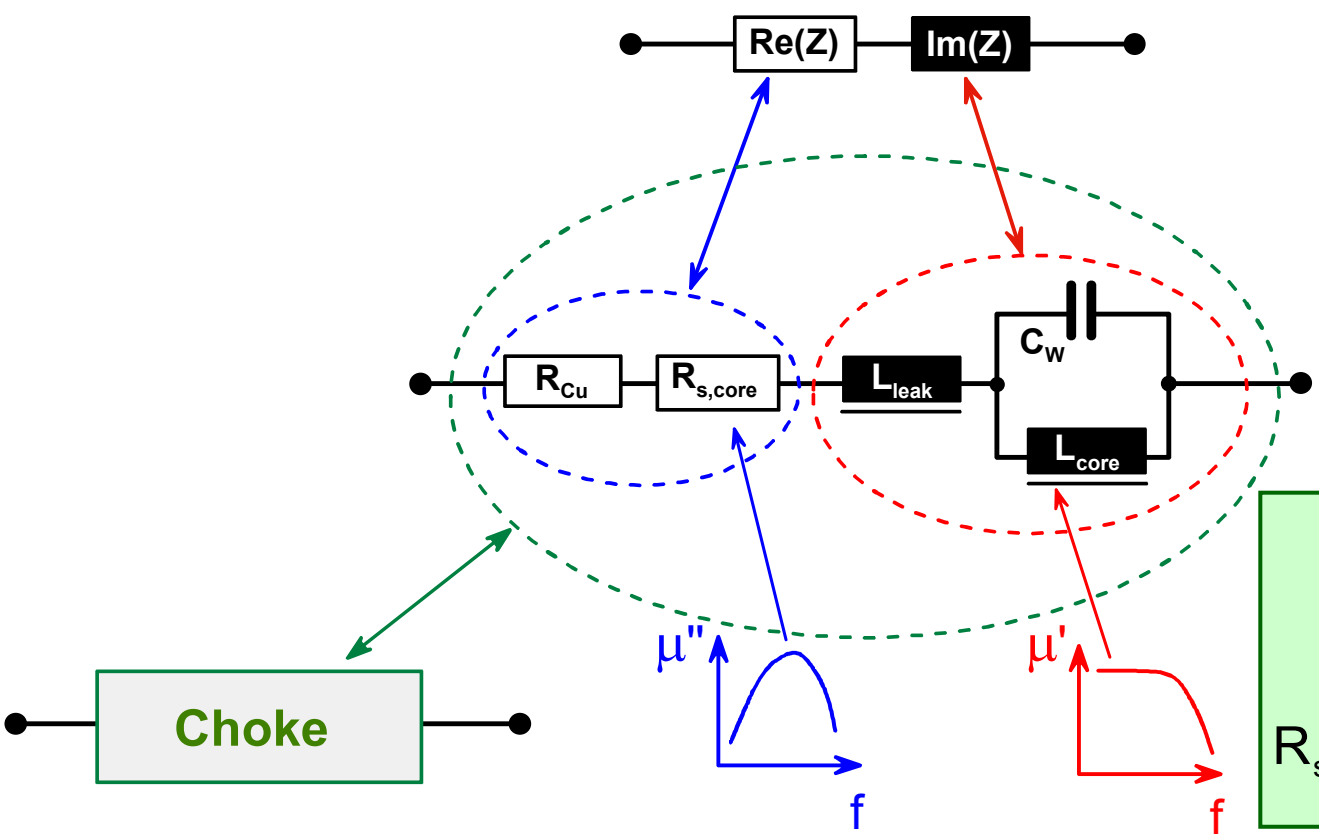


$$L_{core} = \mu_o \mu_s' \cdot N^2 \cdot \frac{A_{Fe}}{\ell_{Fe}}$$

$$R_{s,core} = \omega \mu_o \mu_s'' \cdot N^2 \cdot \frac{A_{Fe}}{\ell_{Fe}}$$

# Requirement of a 3+1Øcommon mode choke 35$A_{rms}$

- Core:
  *High* (*tunable*) permeability
- Wire:
  *High* rated current (>25A) of interest
- Choke performance:
  *High* frequency performance defined by mechanical terminals for fixed parasitic performance
- Safety:
  *No* isolation problem with safety margin in creepage distance

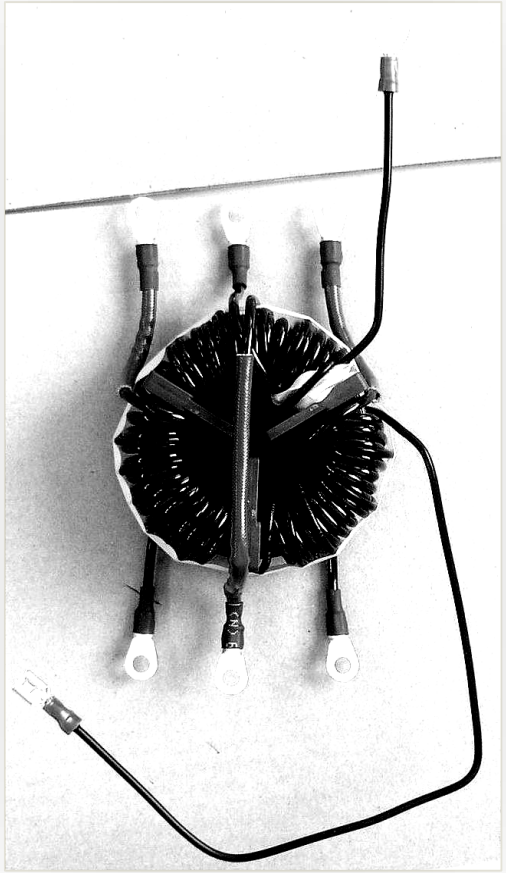

## Validation of CMC is a challenge

- Material based core specification like $\mu_3$ of nanocrystalline tape wound core does **not** reflect application feature:
  $A_L$ as singulary nominal value has large tolerance like -30~+50%
- cmc: inductance (core&leakage $\mu$), enough flux linkage ($B$) and insertion loss ($a_E$)

**All cmc specs. needs is a energetic impulse short with BsT-pulse**

# Physic principle & device damped oscillation

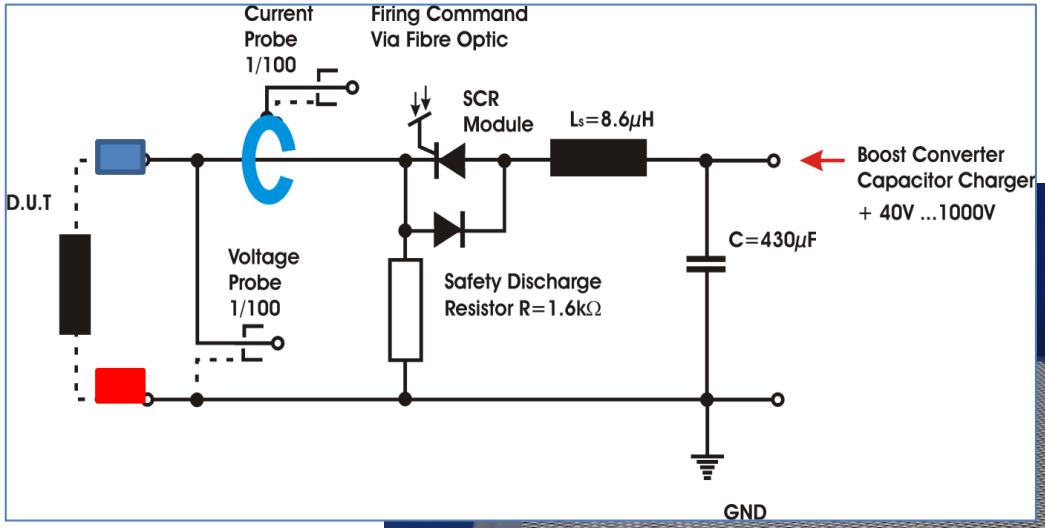


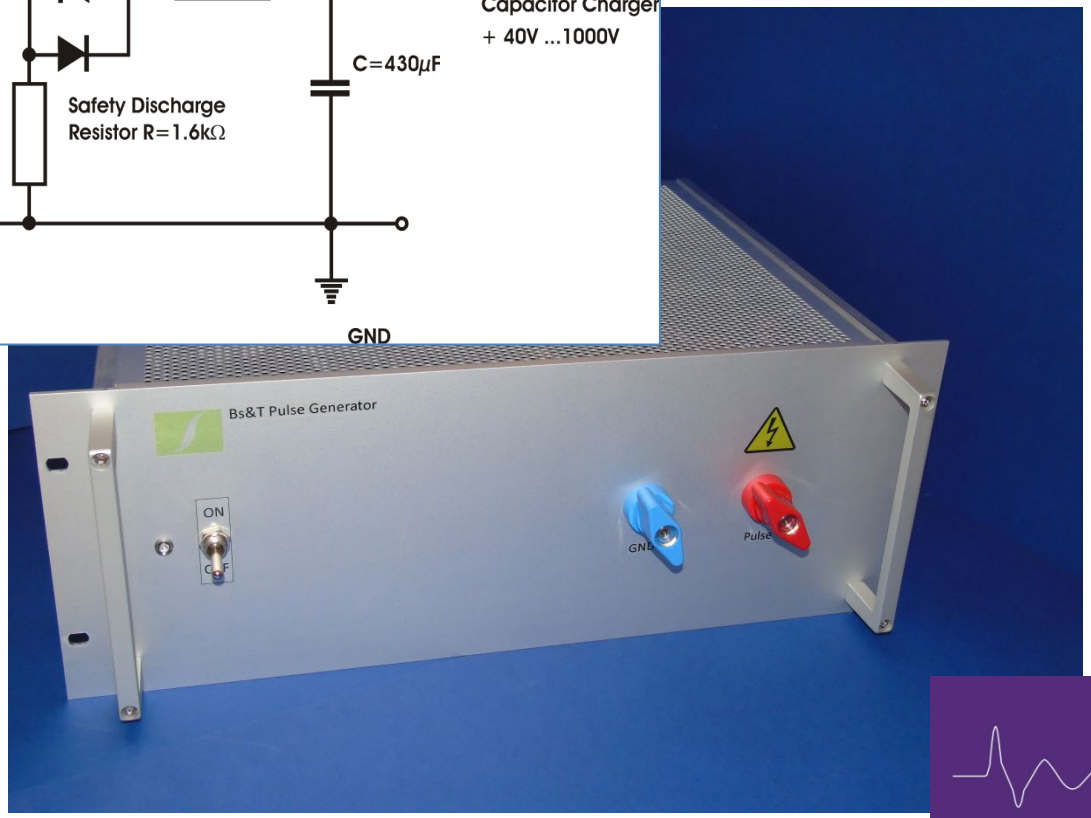


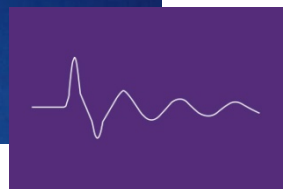

IEEE 389 & IEC60367

# Voltage and current decay ($L_{core\&leak}$)

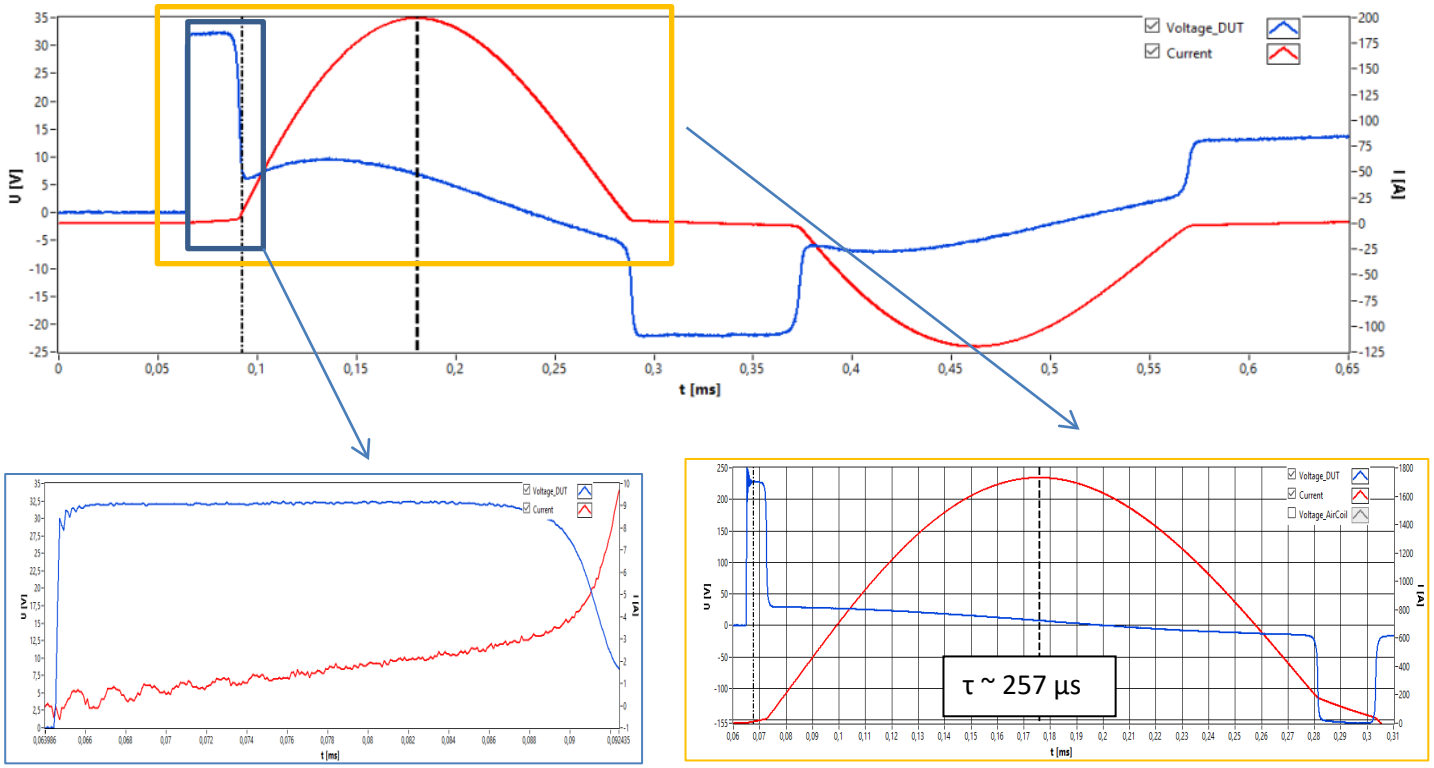


$L_{core}$ ✓ $L_{leak}$ ✓

# $B_s$ and insertion loss and more

- Flux linkage (~$B_s$) regardless the *effective* core geometry specification
- Insertion loss $a_E$*can be calculated with damping coefficient
- It may detect the isolation failure, safety margin

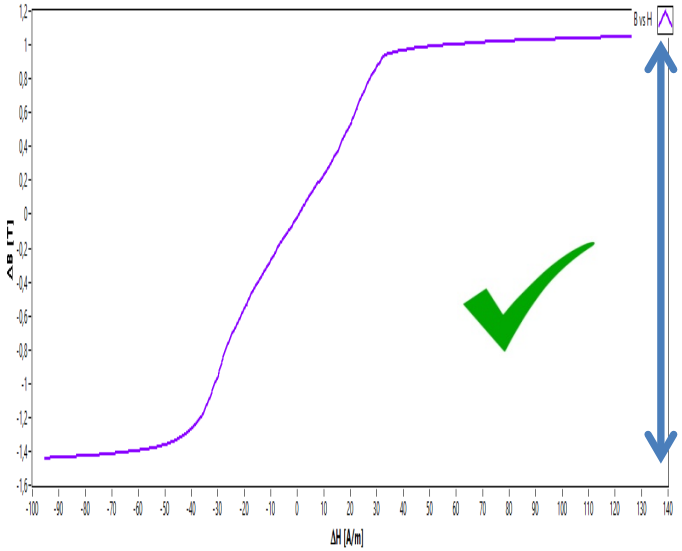


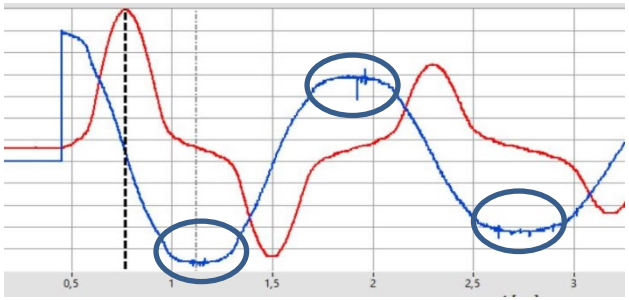

*further reading: JC Sun BodoPower 10/2020
Damp-Oscillation Solution for Validation of the Nanocrystalline Core for Common Mode Choke

# conclusion

- Damped oscillation principle* enables characterization and validation of common mode choke, fast easy and accurate, compliant ieee 389 mod. ✓ ✓
  *Core and leakage inductance* ✓
  *flux linkage of absorption capability of noise energy and insertion loss* ✓
  *wire isolation w/o corona effect* ✓
- Same effective to *differential* mode choke see annex

*further reading: JC Sun IEEE power Maganzine060/2021
**Recent Development in Measuring Technology of soft magnetic components for High Power Applications**

## Annex with an example for Different mode choke

- dmc:
  cored with material &shape *HS1016* (CSC) 2x wound with edge wire with N=53
- Voltage load: 400V
- Capacitor: 430 µF
- Device: BsT-Pulse 1k3k Typ SN0001b

# Voltage and current decay

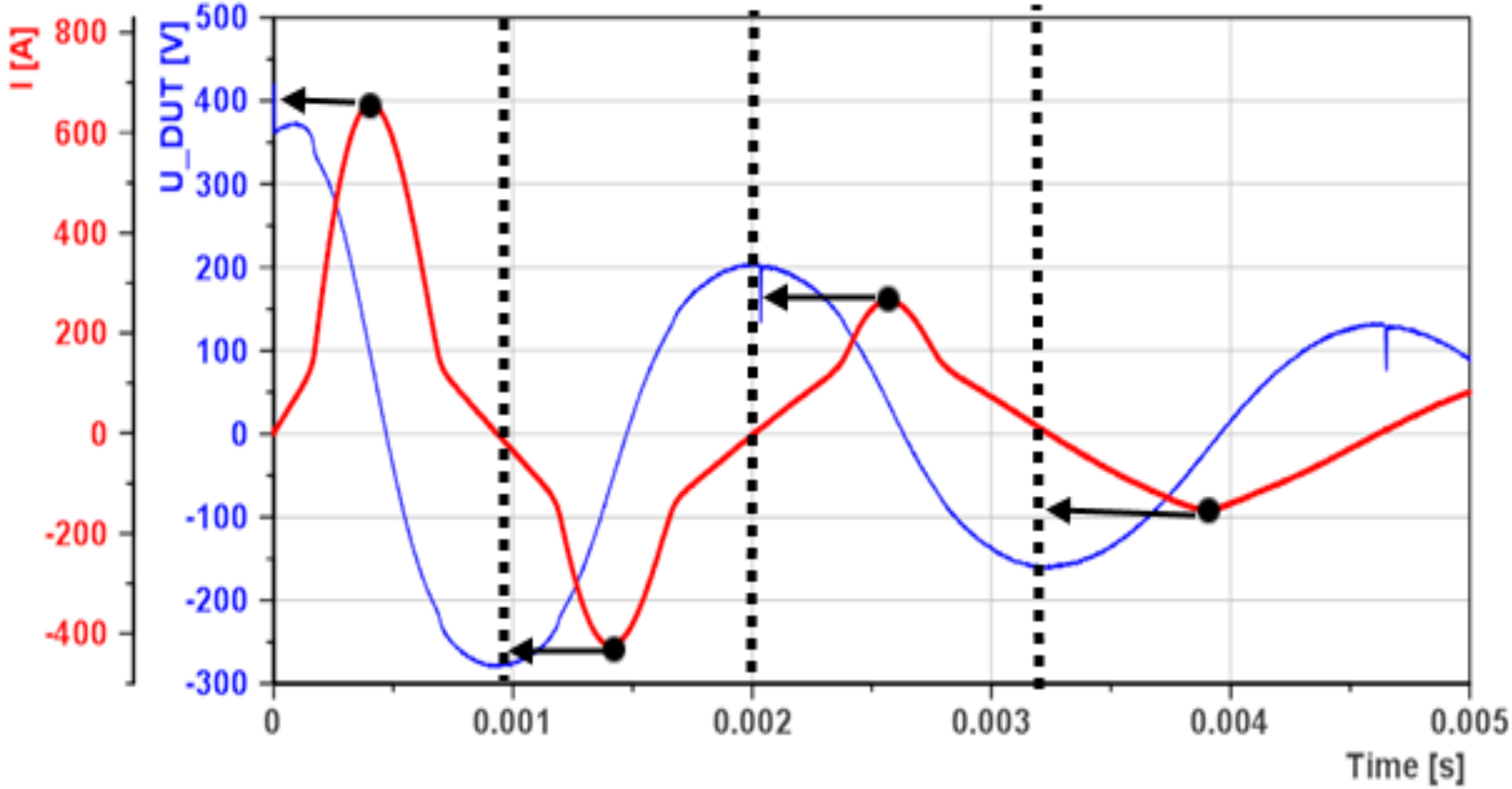


PSMA workshop magnetics  Damp-Oscillation BsT-pulse

# Curve & Loop via parameter fitting [Rivas]

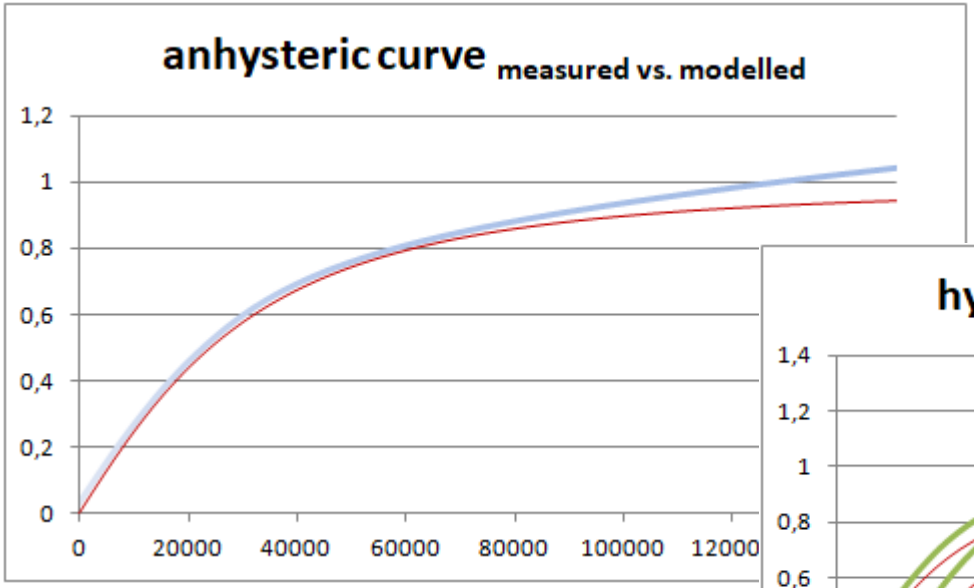


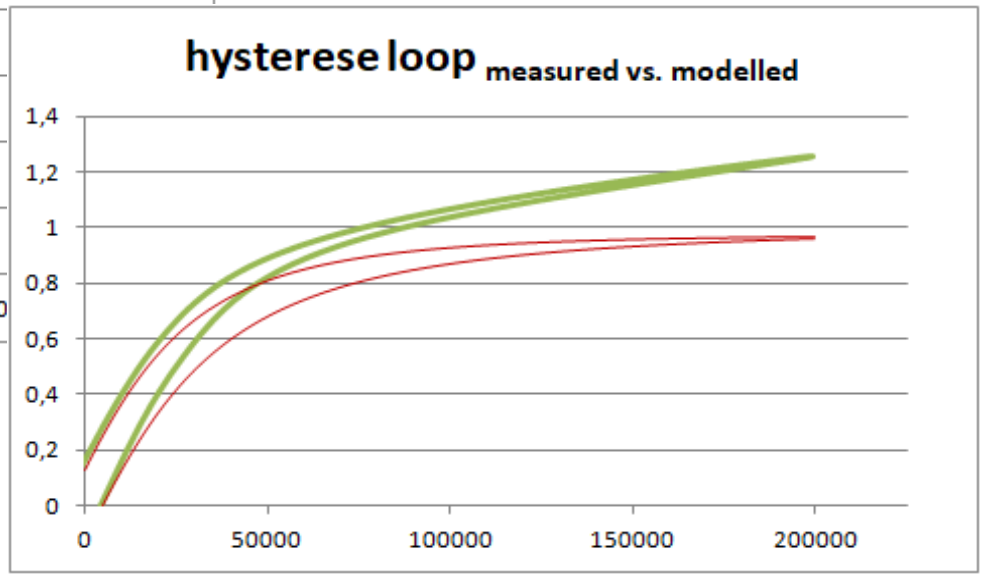


further reading: JC Sun BodoPower 09/2020
Damp-Oscillation Solution for Validation of the Metal Alloyed Powder Core