The development of 1200 V SiC Hybrid Switched power modules

Puqi Ning

Institute of Eelctrical Engineering,CAS

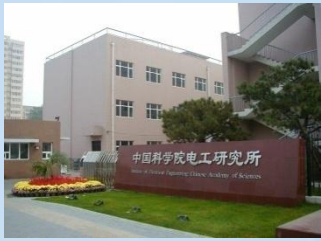

Contents

1. Background
2. HyS Packaging
3. HyS Gate Drive
4. HyS based Converter

Low Cost Requirement from EV

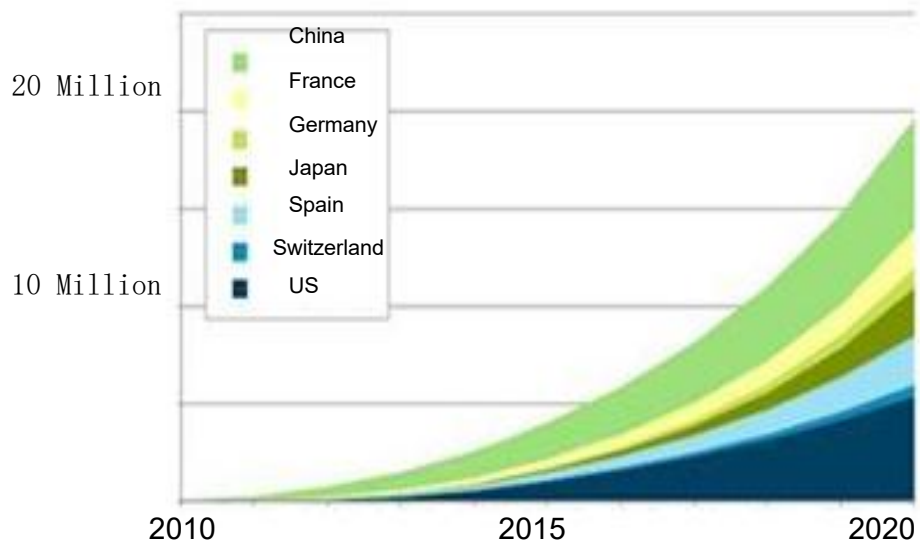

	Traditional model (￥)	HEV(￥)
Camry	180k	260k
Civic	140k	270k
BMW i3	370k	600k
Audi A8	660k	1100k
Cayenne	920k	1430k

High price，impact development

Improve power density

- **“Energy saving and new energy automobile industry development planning(2012-2020)”**

Cumulated sales 5 Million EV @2020

- **“Made in China 2025”**

Annual sales 3 Million EV@2025, 80% Chinese native EV

Power device is important for cost

High power density
Low cost

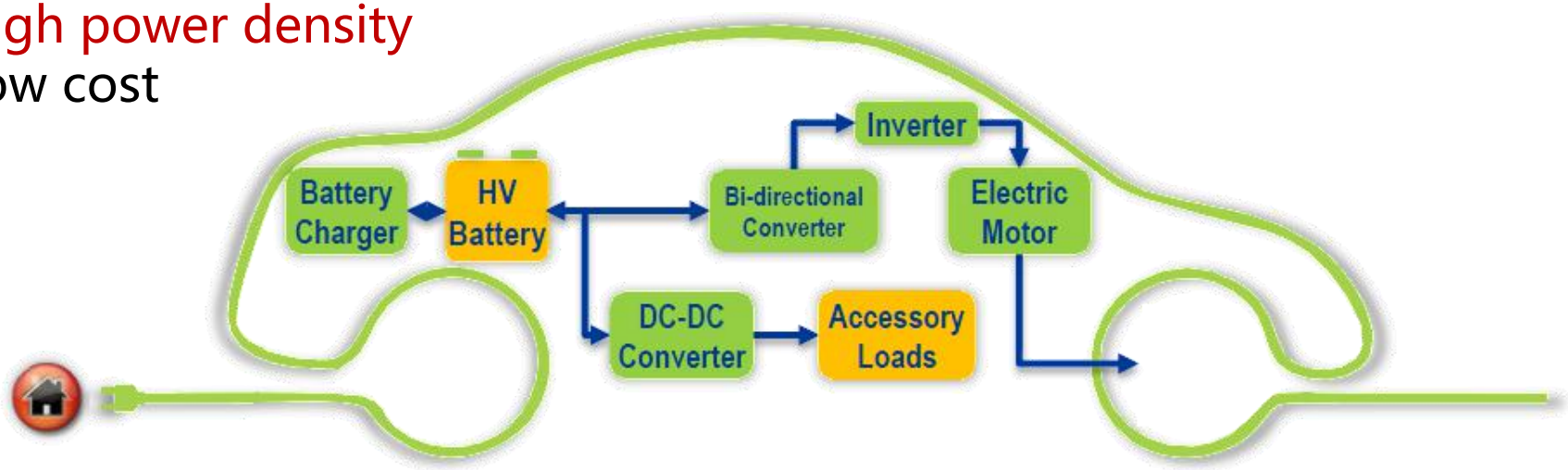

	DOE 2020	DOE 2025
Density	13.4 L/kW	100 L/kW
Cost	3.3 $/kW	2.7 $/kW

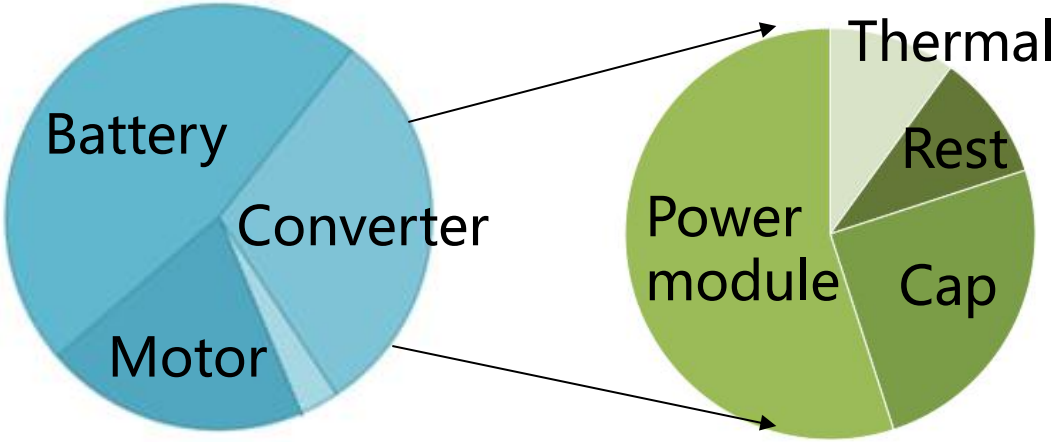

Advantages of WBG Devices

Next generation power device

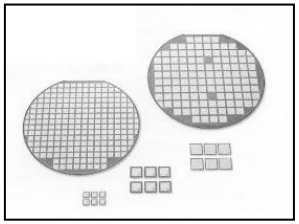

Low resistance	1/3-1/5 of Si
High T operation	1.5-2 times of Si
High switching f	3-5 times of Si

SiC Device: High Cost

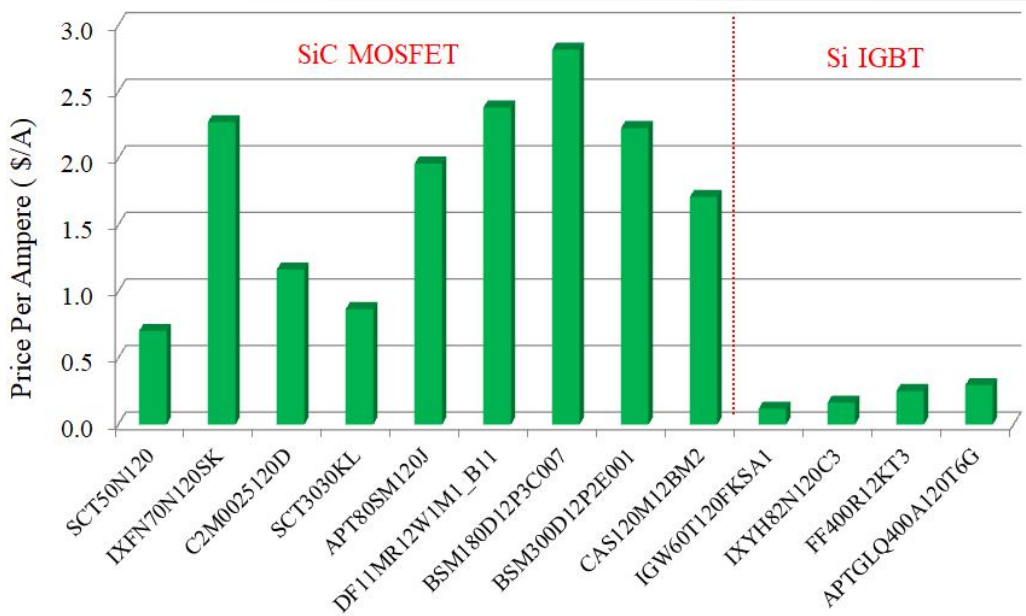

5-10X Si IGBT cost

Ref: Lei Li, WiPDA ASIA 2018

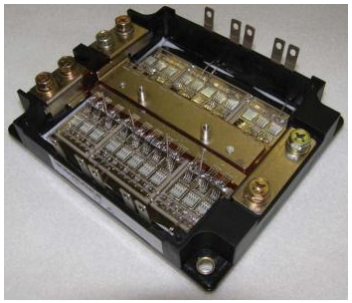

1200 V/800 A
about 5000$

1200 V/400 A HP1
about 7000$

1200 V/400 A SiC
about 2500$

SiC EV

Tesla SiC EV

SiC module

SiC Converter

Model 3

Toyota SiC EV

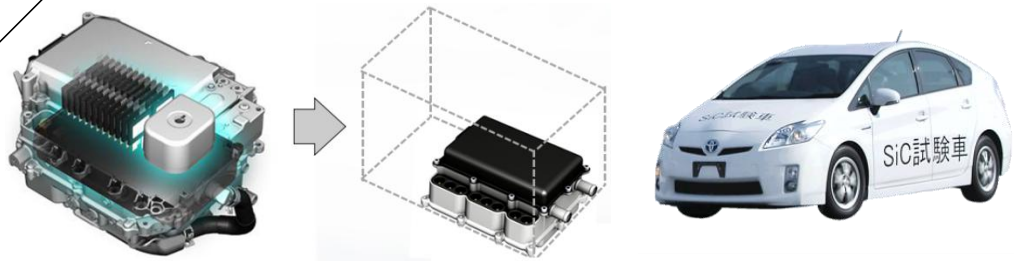

2020 EV products

High Frequency Requirement

EV moter drive

100 kW
30-50 kHz

More Electrical Aircraft

>50 kW， >30 kHz

Wireless Charger

>30 kW
48-96 kHz

PE Transformer

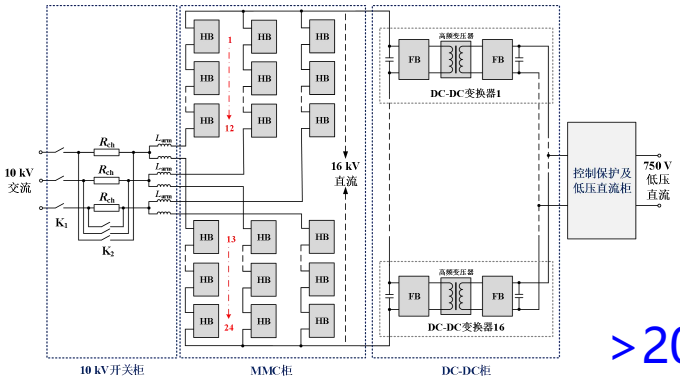

>20 kW
30 kHz

Hybrid Switch SiC （HyS）

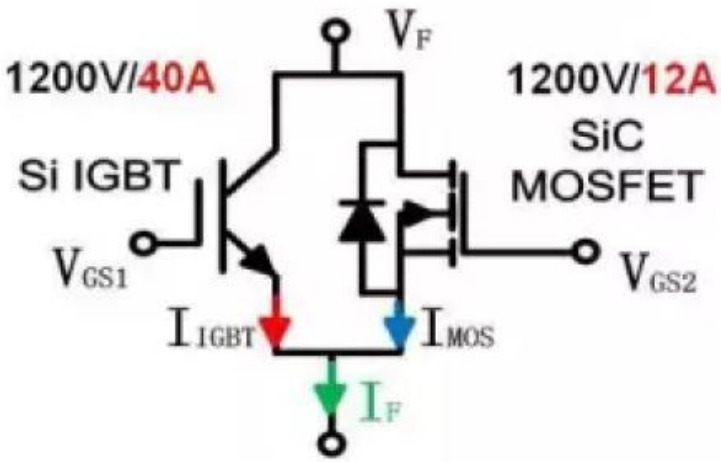

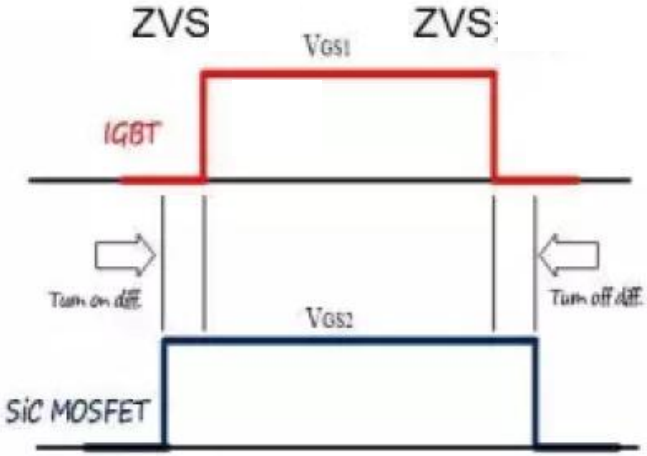

Example 1:4 current sharing

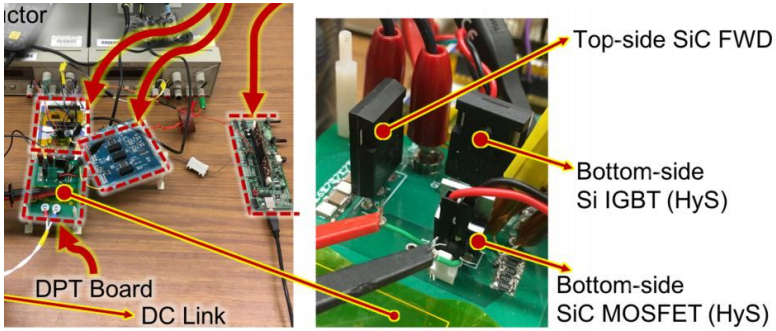

Turn-on loss

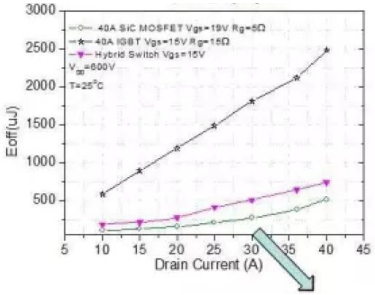

Turn-off loss

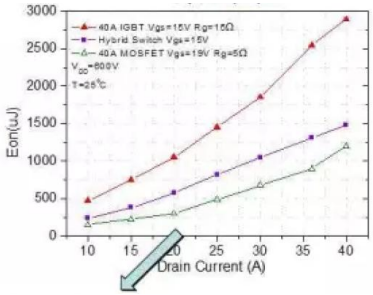

HyS close to pure SiC device

Ref: Jun Wang, PE 2018

Contents

1. Background
2. HyS Packaging
3. HyS Gate Drive
4. HyS based Converter

Busbar Solution

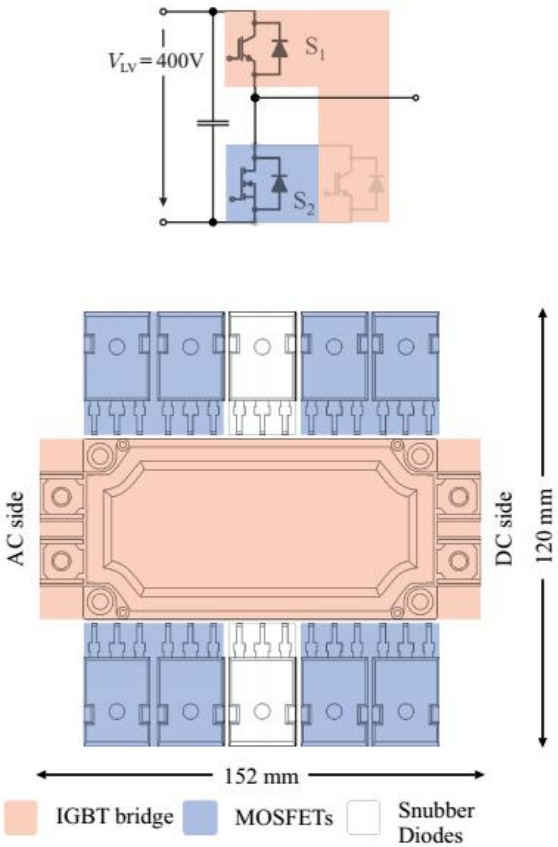

IGBT module+MOSFET discrete

Ref: Kolar, COMPEL 2013

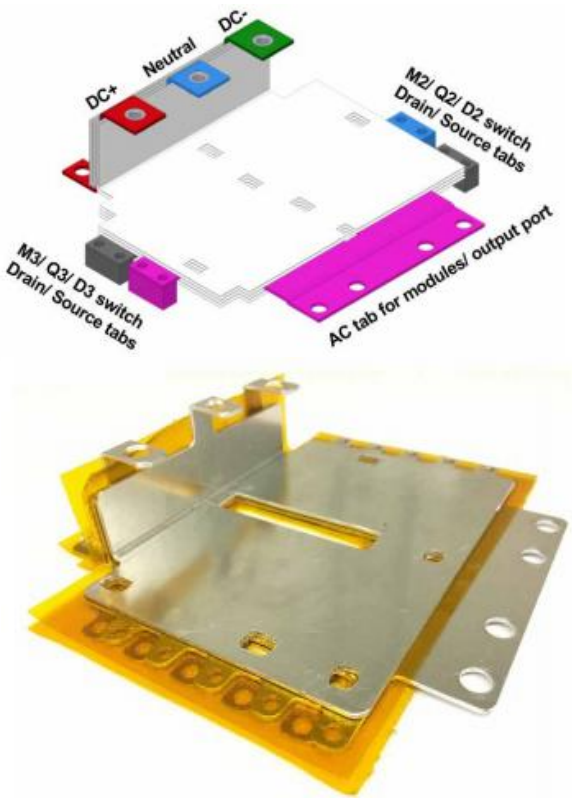

IGBT module+MOSFET module

Ref: Fang Luo, APEC 2018

High Voltage HyS Module

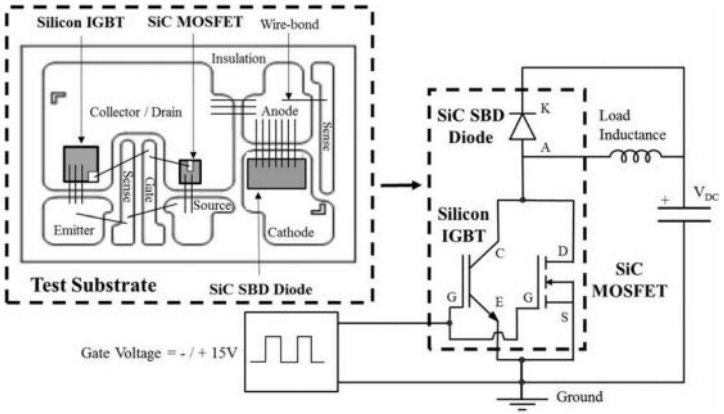

3.3 kV HyS module

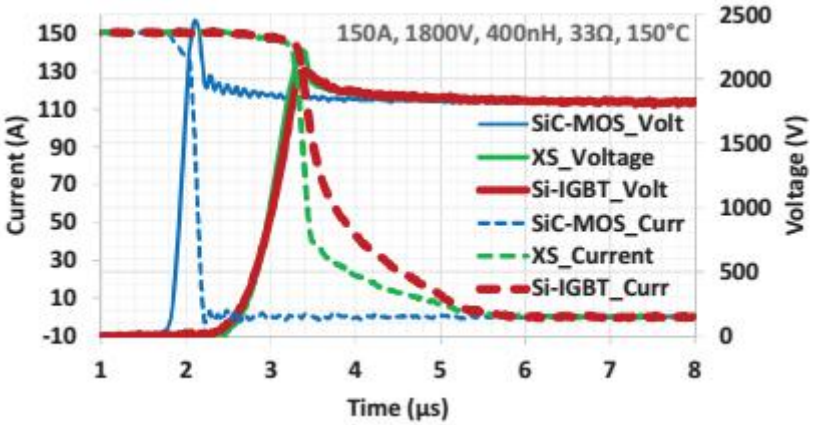

Ref: ABB, ISPSD 2016

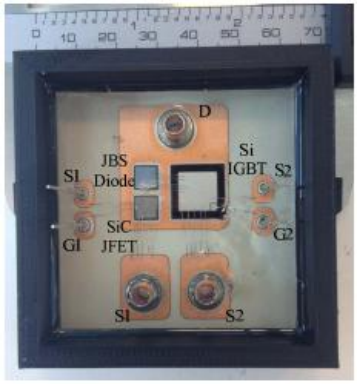

6.5 kV HyS module

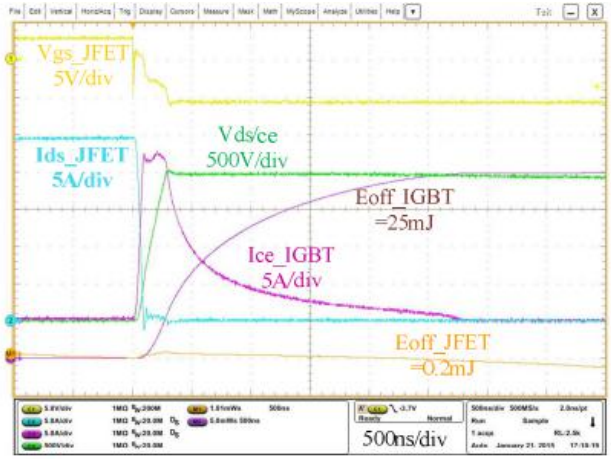

Ref: A. Huang, COMPEL 2013

1200 V/200 A HyS Module

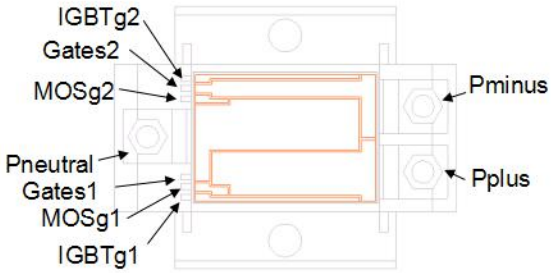

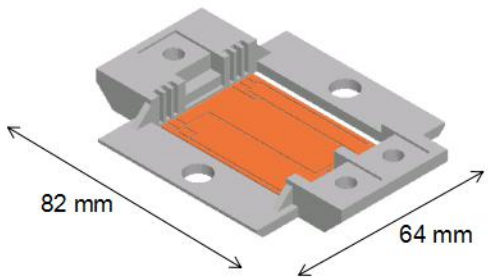

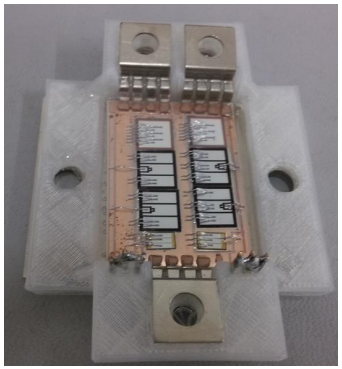

1-phase module

3-phase module

4X1200 V 100 A Si IGBT
IRG8CH97K10F

4X1200 V 150 A Si IGBT
IRD3CH82DB6

2x1200 V 50 A SiC MOSFET
CREE CPM2-1200-0025B

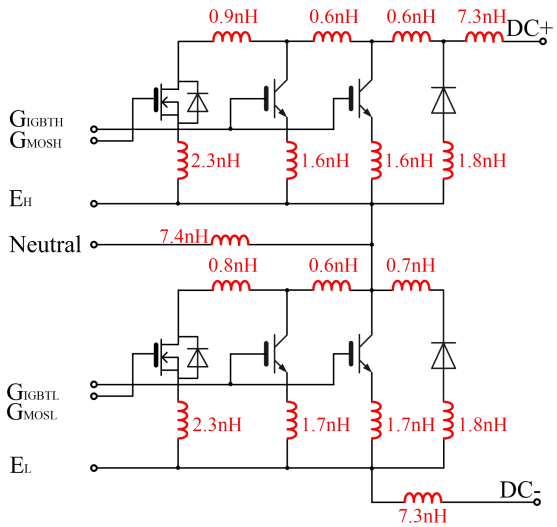

HyS Module Performance

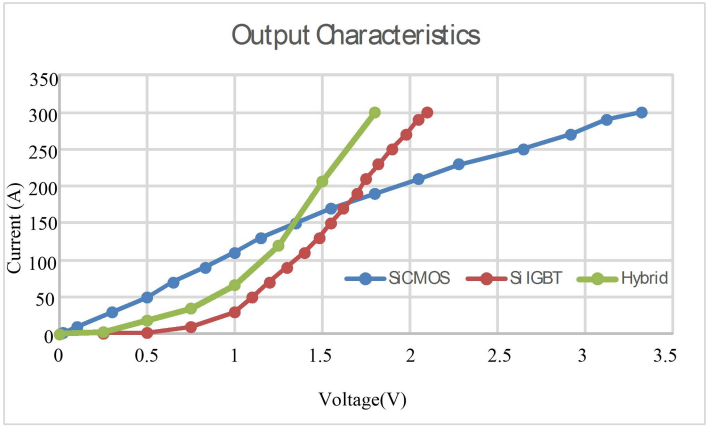

Conduction loss

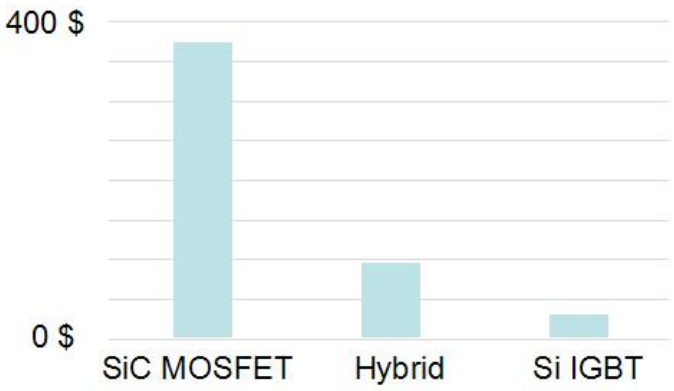

Cost

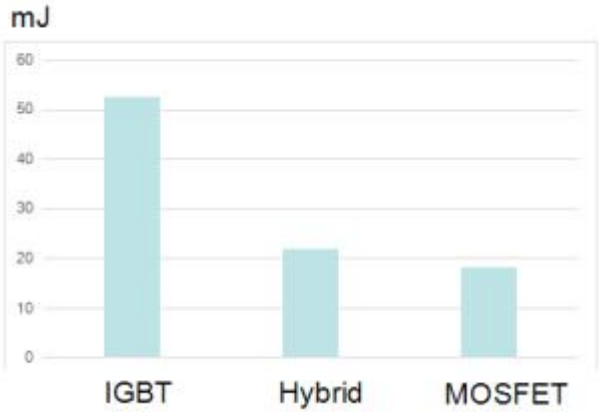

Switching loss

Performance close to SiC module
Cost close to Si IGBT module

Ref: P. Ning, CES EMS 2017

1200V 400 A Module

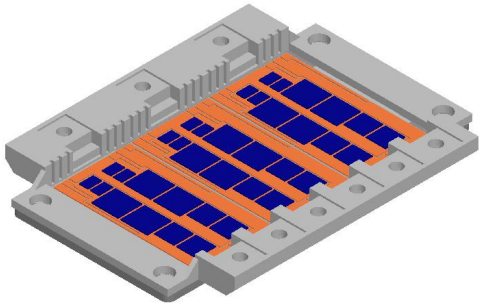

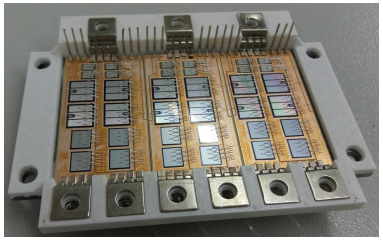

1200 V/400 A
3-ph module

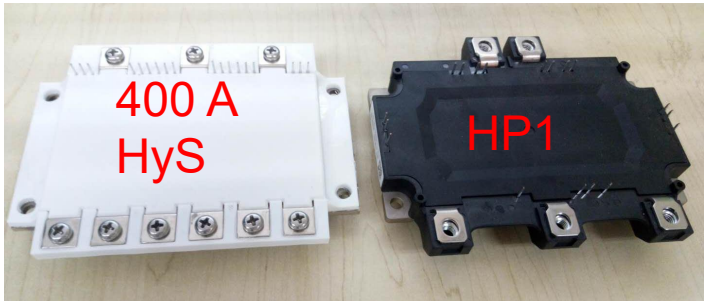

same size

4X1200 V 100 A Si IGBT
IRG8CH137K10F

4X1200 V 150 A Si Diode
IRD3CH82DB6

4x1200 V 50 A SiC MOSFET
CREE CPM2-1200-0025B

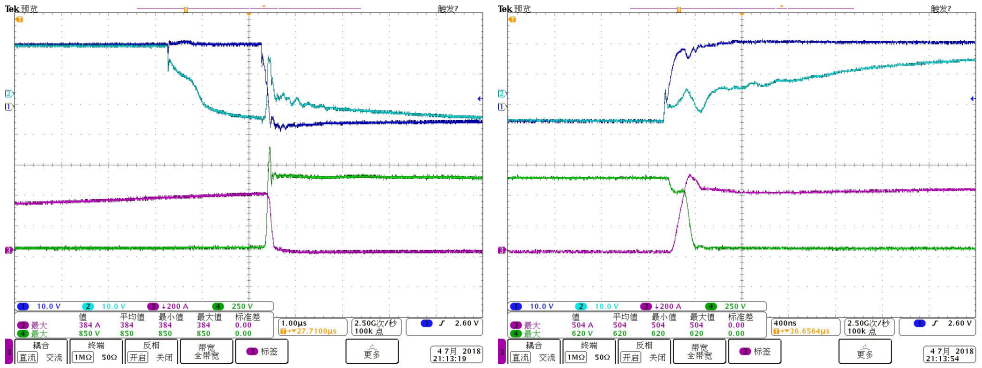

Switching at 600 V/400 A

1200V 600 A Module

1200 V/600 A
1-ph module

6X1200 V 100 A Si IGBT
IRG8CH137K10F

6X1200 V 150 A Si Diode

IRD3CH82DB6

6x1200 V 50 A SiC MOSFET

CREE CPM2-1200-0025B

Modules	Power rating	Dimension (mm^3)	Density
Infineon FF600R12ME4E_B11	1200 V/600 A, Si	62.5×152×17	4.46
Infineon FF1800R12IE5P	1200 V/ 1800 A, Si	250×89×26	3.73
MitsubishiFMF800DX-24A	1200 V/800 A, SiC	121.7 x 92.3 x 13	6.57
Presented 600 A HyS	1200 V/600 A,hybrid	133×68×9.5	8.4

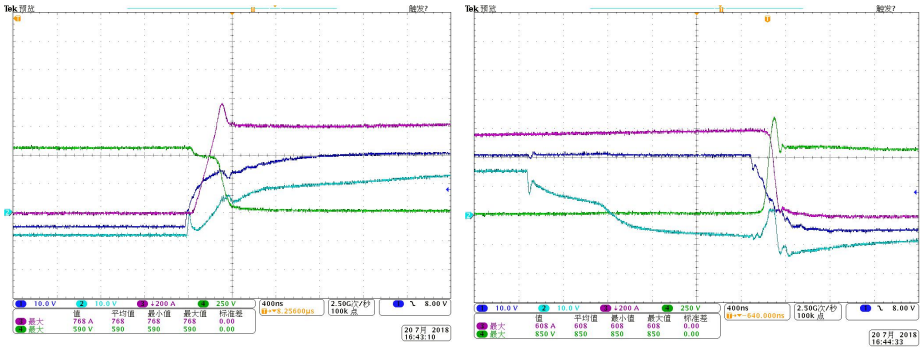

Switching at 600 V/600 A

Contents

1. Background
2. HyS Packaging
3. HyS Gate Drive
4. HyS based Converter

Gate Drive Pattern

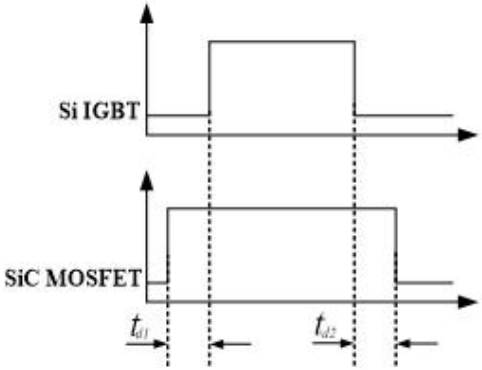

Pattern I

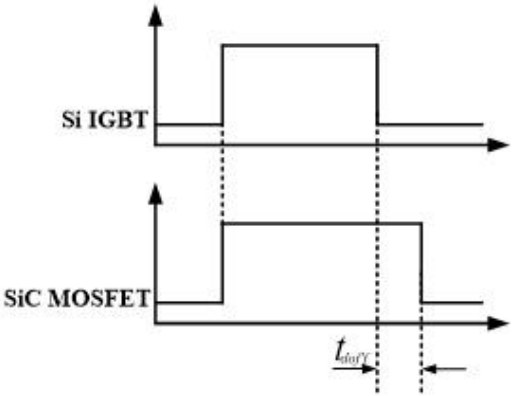

Pattern II

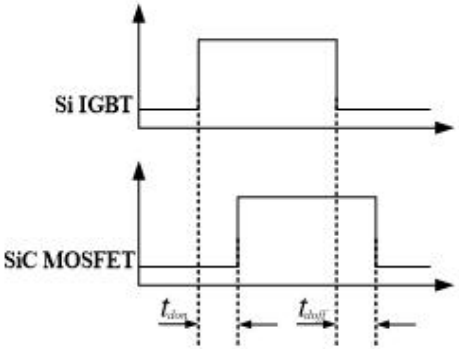

Pattern III

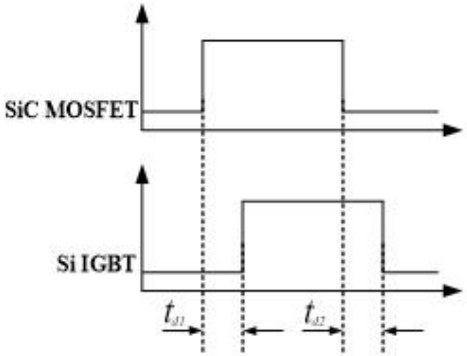

Pattern IV

Ref: Jun Wang, PE 2018

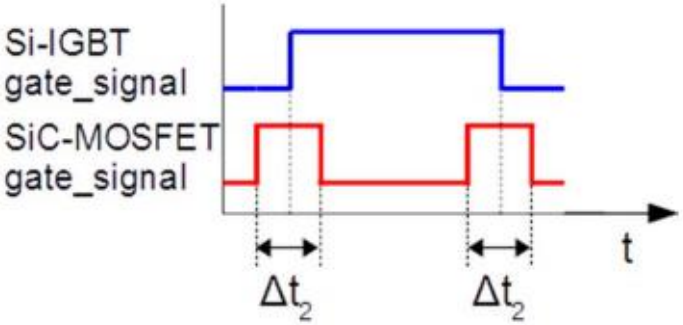

Ref: S. Ueno, EPE 2017

Miller Effect

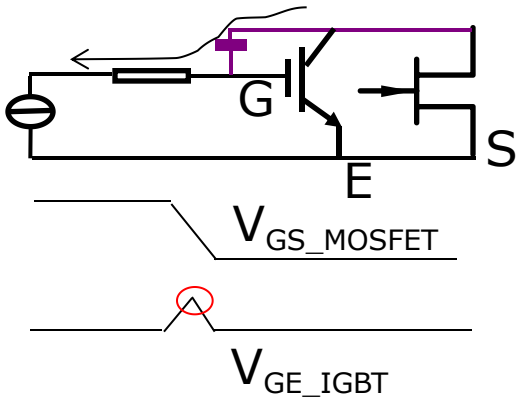

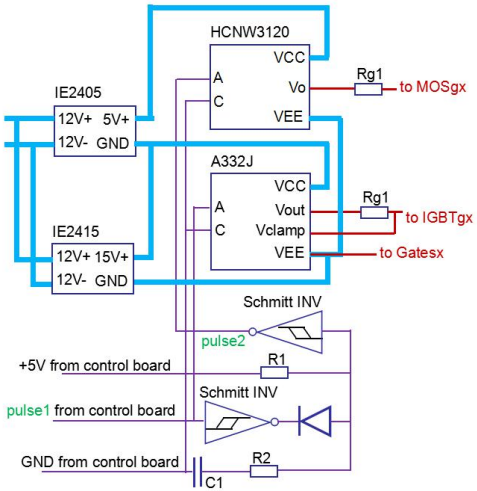

Gate drive with Miller clamp

Ref: P. Ning, CES EMS 2017

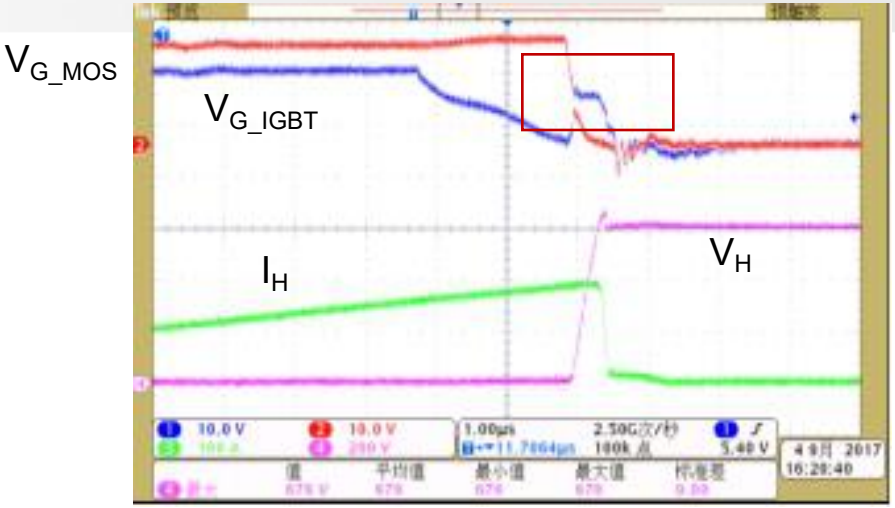

Without Miller clamp

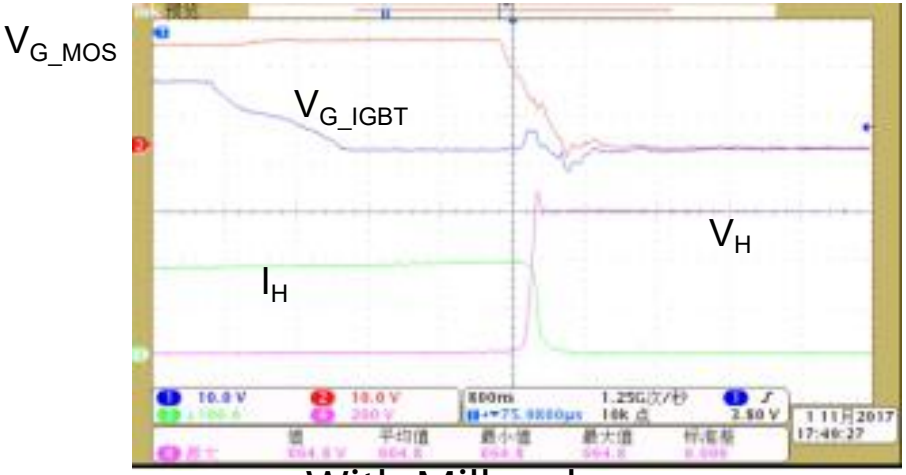

With Miller clamp

Time Delay and Trade-off

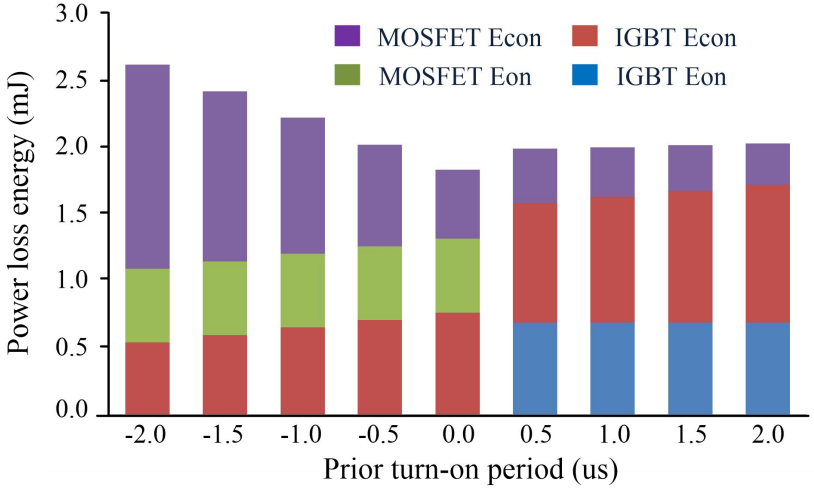

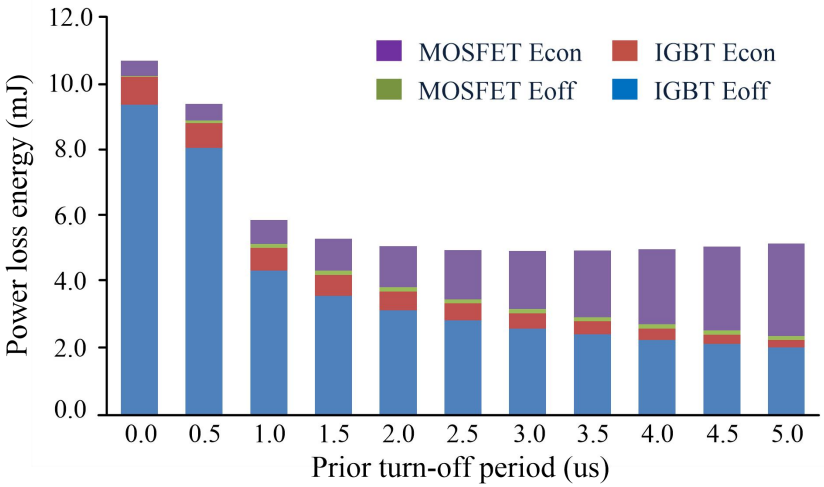

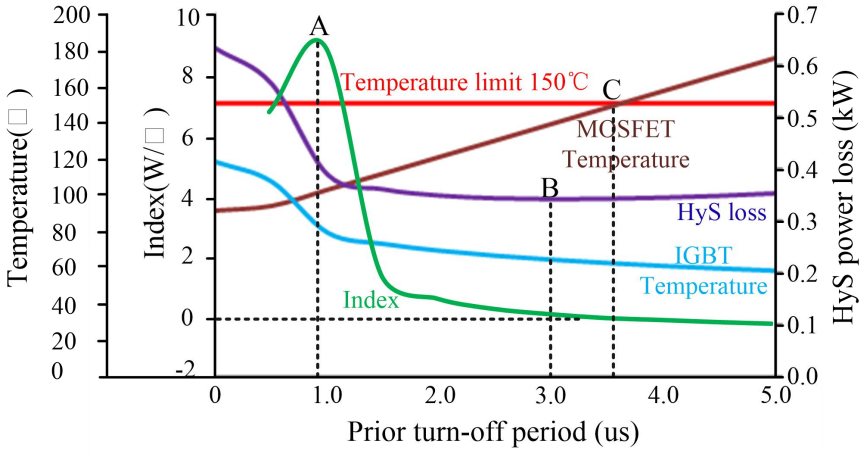

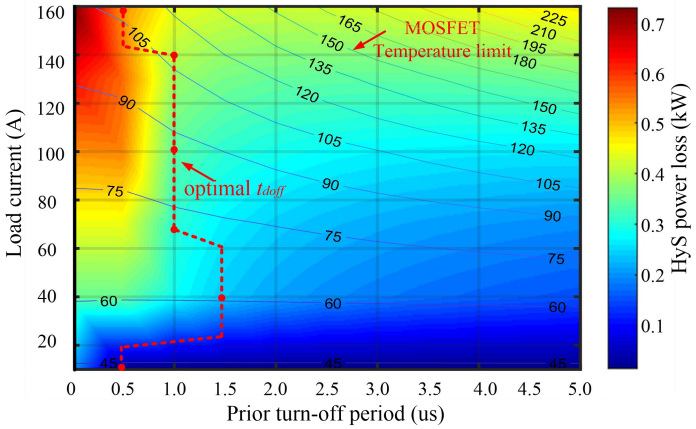

Contents

1. Background
2. HyS Packaging
3. HyS Gate Drive
4. HyS based Converter

Published HyS Converter

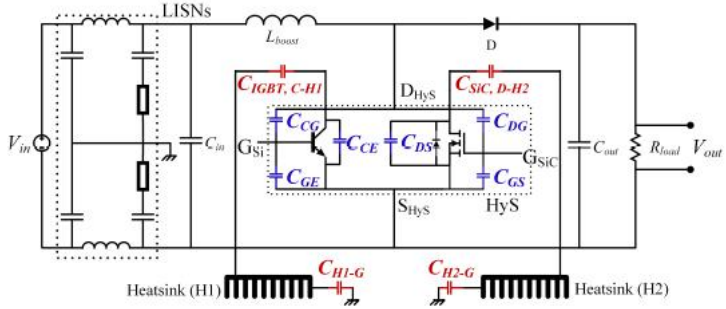

Boost converter，20 kHz

Ref: Fang Luo, PE 2018

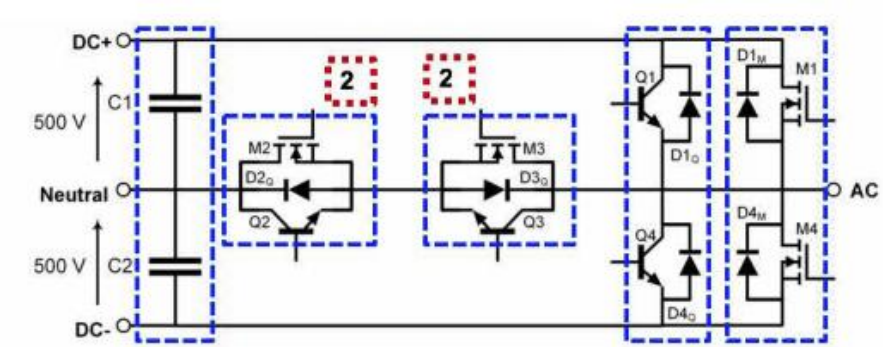

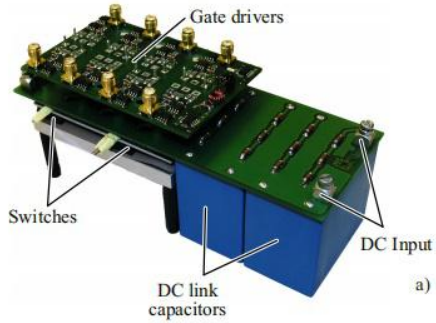

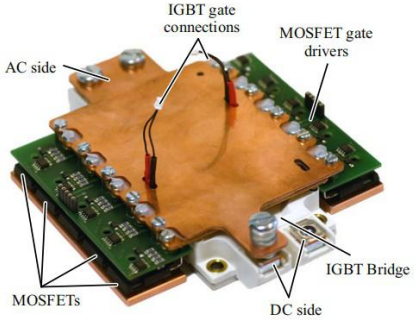

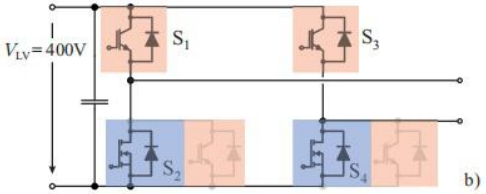

Buck converter，20 kHz

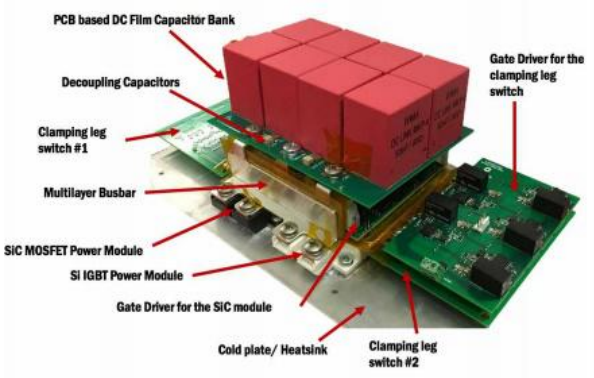

T type 3-level module，28 kHz，17.5 kVA，for 100 kVA converter

Ref: Fang Luo, APEC 2018

HyS Converter System Design

System reqirement → System parameters

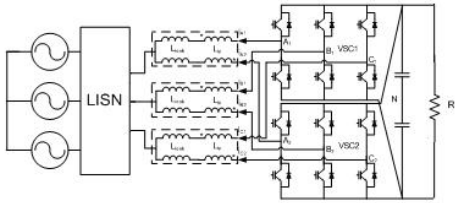

System parameters → System Layout, Power module, Gate drive, Control & Protection, Power stage

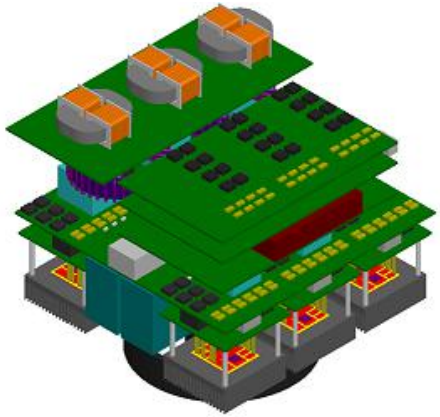

High power density

Converter Parameter Optimization

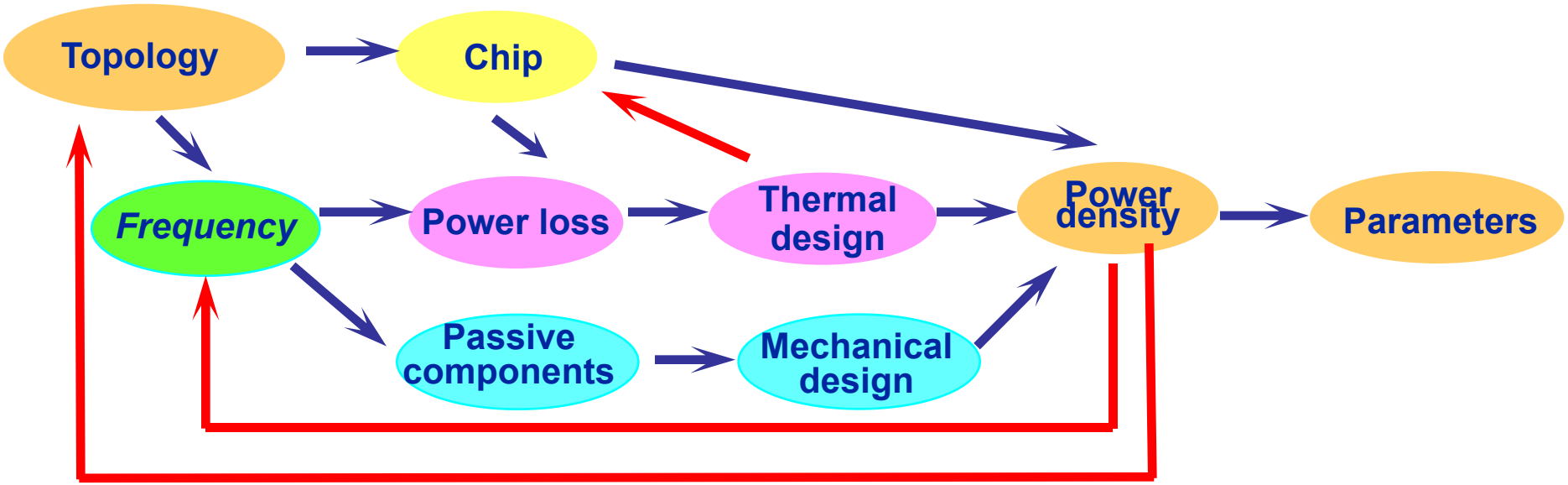

HyS Converter: Wireless Charger

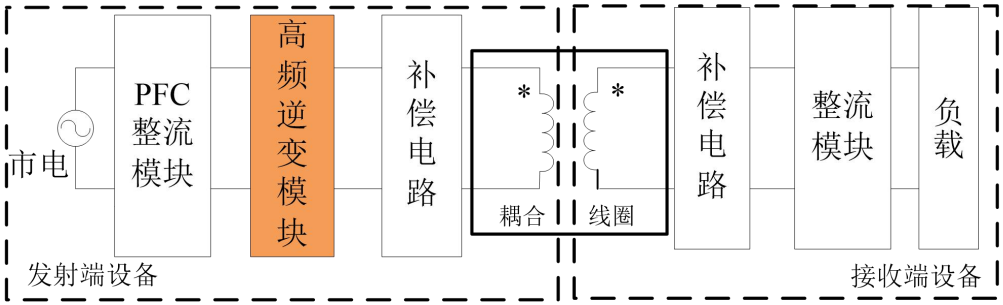

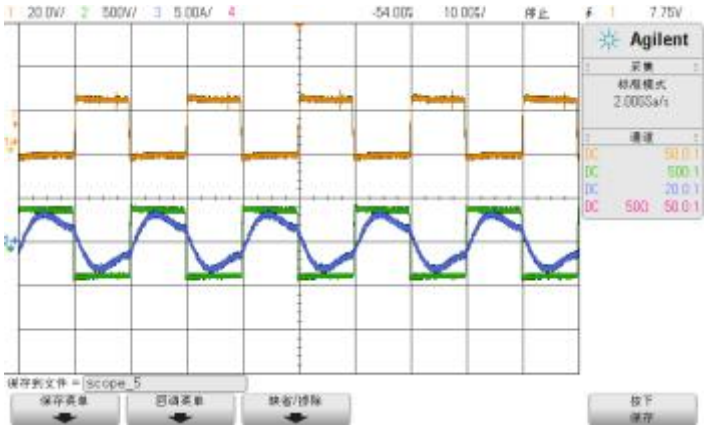

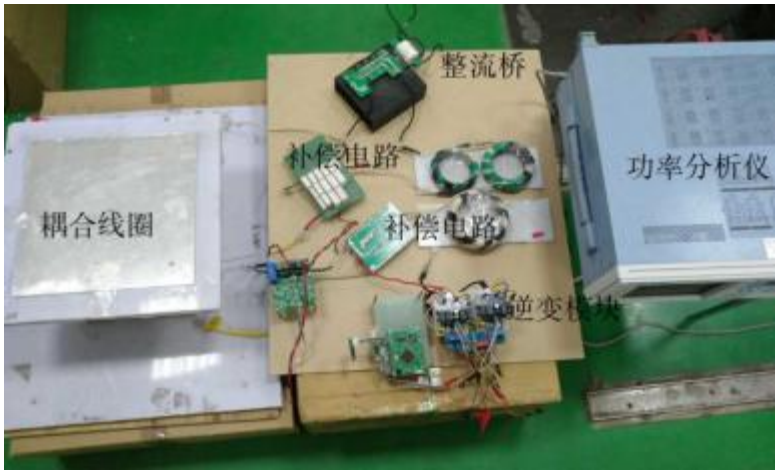

50 kHz@3.37 KW

Ref: Lei Li, WiPDA ASIA 2018

HyS Converter: Motor drive

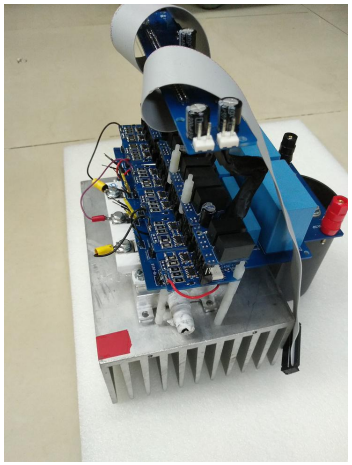

with 1200 V/200 A HyS module

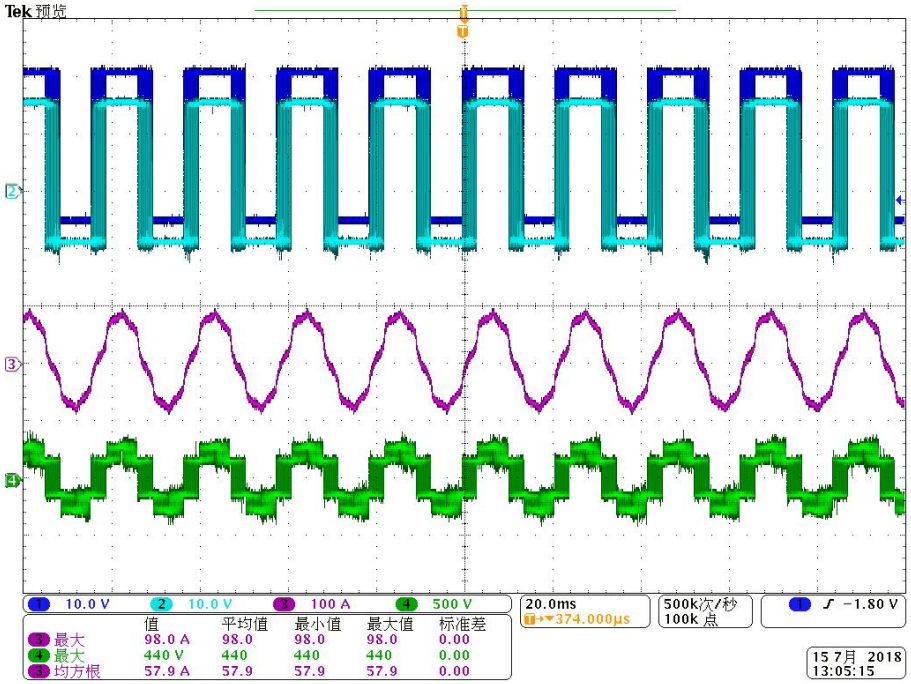

Motor drive 30 kHz , 30 kW

Target: 200 A module, 50 kW@30 kHz, or 70 kW@10 kHz
400 A module, 90 kW@30 kHz, or 120 kW@10 kHz

Summary and Conclusion

- HyS's performance is close to SiC MOSFET , cost is close to Si IGBT
- Module packaging and gate drive is important for HyS
- HyS converter is promising , waiting for higher power test