PSMA EMC Basics

Today's Presentation
"EMC Design Principles ", Josefine Lametschwandtner, RECOM Power Inc.

Question & Answer Session:

Submit questions via Questions Window anytime. Questions will be addressed at the end of the presentation.

Important Notes

This webinar will be recorded and available on the PSMA web site shortly after the webinar Participant Phone Lines will be muted throughout

MODULES FOR DISTRIBUTED POWER ARCHITECTURE

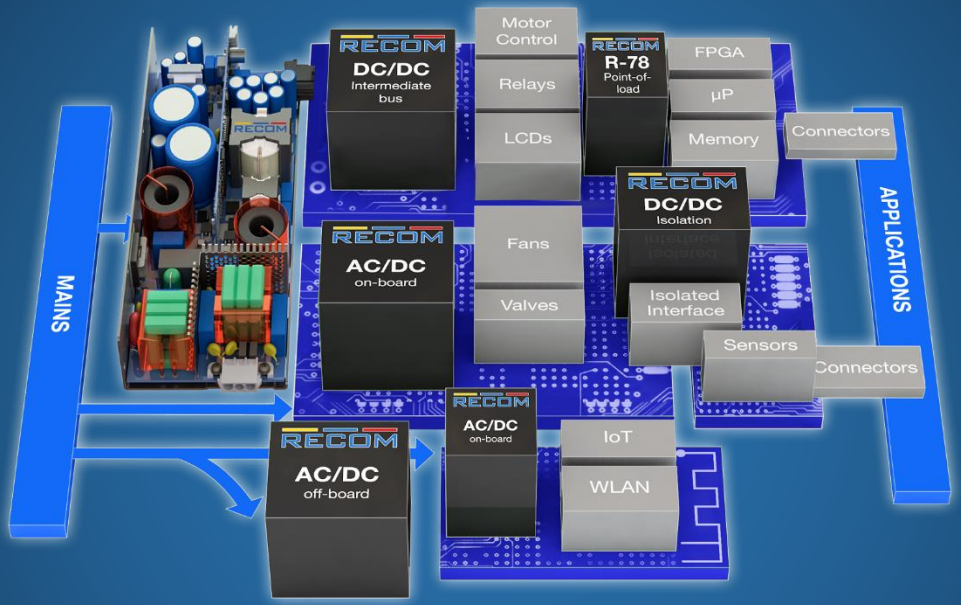

EMC Measures in general

Josefine Lametschwandtner, BSc

EMC-Online-Seminar, 31th of May 2022

RECOM
WE POWER YOUR PRODUCTS

Agenda

- Measures for a first time pass
- First time fail
- Live Measurement Placement

General Principle

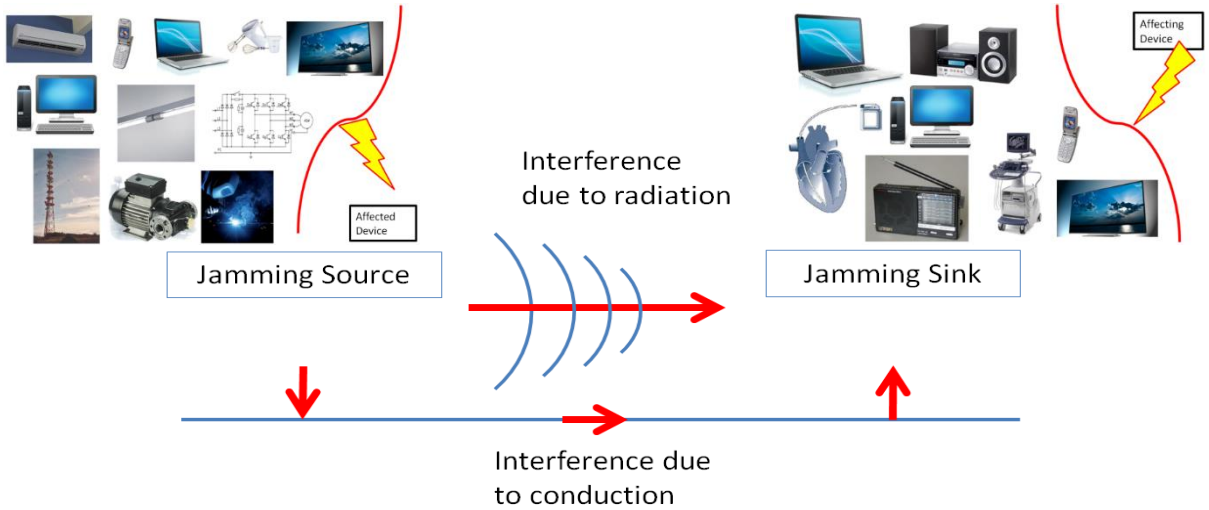

Approach to a first time pass

- Concept of areas
- Classification of the signal types (aggressive, sensitive, equal)
- Connectors
- Interfaces: wires leaving the board
- Check the length of sensitive traces
- Filter
- Layer stack
- Parallel components used correctly

Concept of Areas

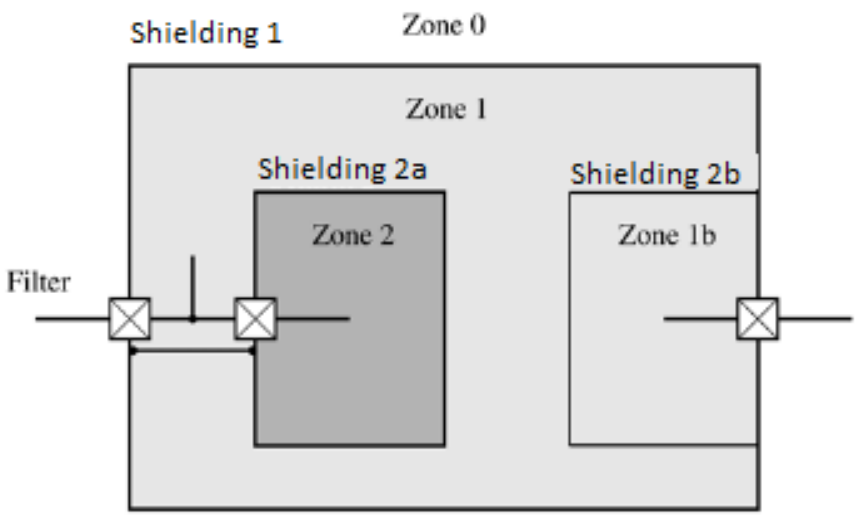

Fig.: Zones to separate different areas [1]

Separate different areas and order them
- eg. Zone 1 – analog measurement,
- eg. Zone 1b – temperature measurement
- eg. Zone 2 – interface of communication

Shielding and/or filtering of different Zones
- Subzone – at least shielding
- Zone-Zone - Shielding and Filtering, when entering from one zone to the other

When do I care about zones?
ASAP – latest at the first sketch of the block diagram

Signal Types

- Classify Signals
  - Aggressive
  - Sensitive
  - Indifferent
- Separate different signal types as well as possible

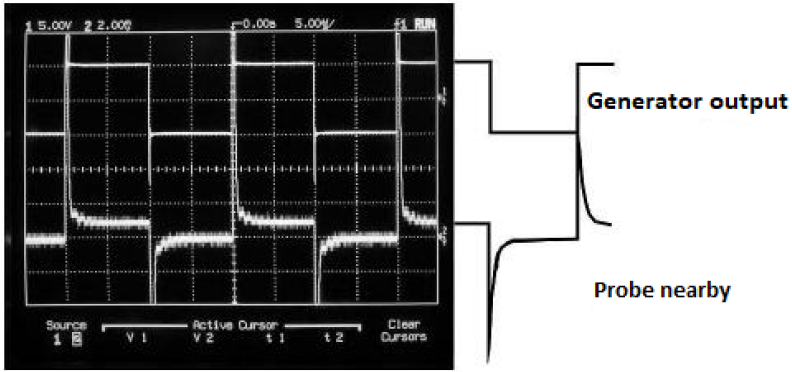

Fig.: Crosstalk between traces [2]

Connectors

- Placement of connectors

- Selection of connectors
  - Shielded
  - Type
  - Filtered

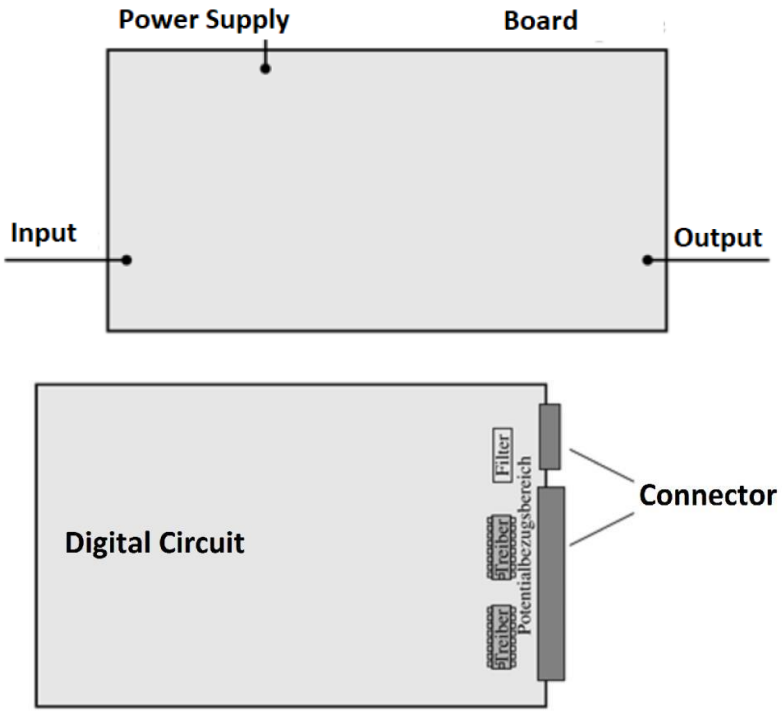

Fig.: Placement of connectors [1]

Interfaces

- Wires & Traces leaving the board:
  - Filter
    and / or
  - Shielding
    and / or
  - Twisted pair
- Shielding
  - 360°
  - Direct
  - On both ends
- Filter
  - On both ends

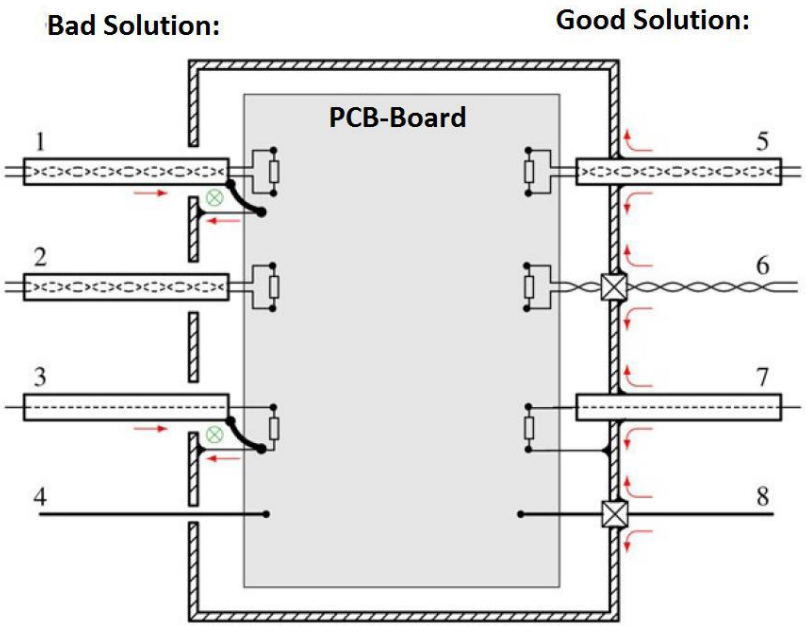

Fig.: Handling of Interfaces [1]

Connectors & Shield – 360°

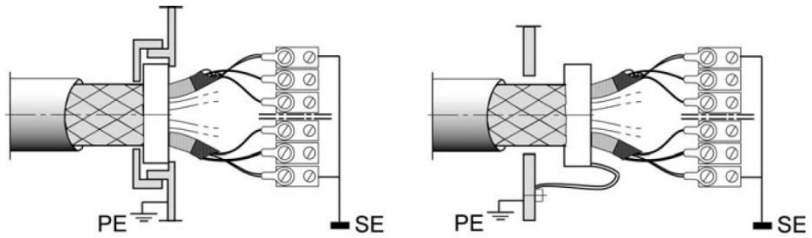

Fig.: Cable-Shield Connection [4]

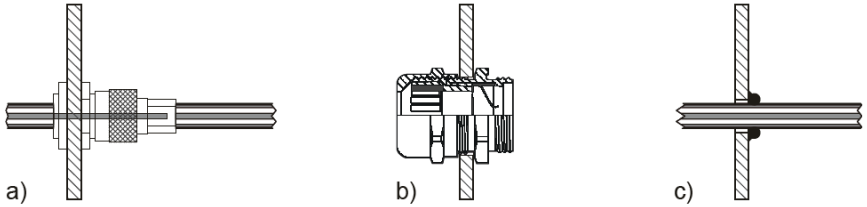

Fig.: HF-Connectors [3]

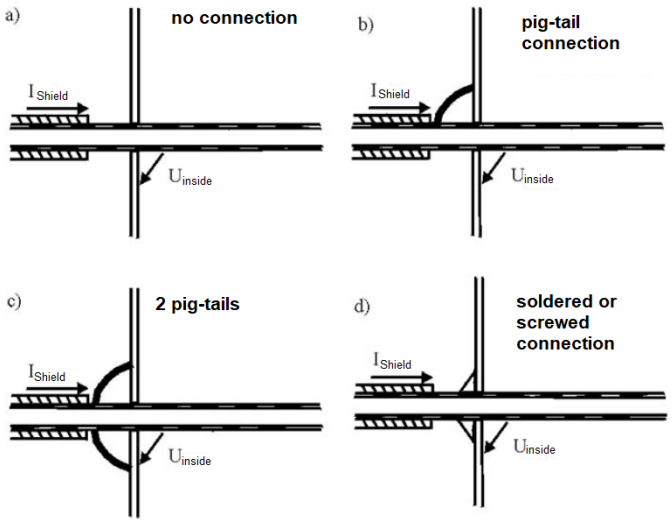

Fig.: Shield connection [2]

Cable shield – 360°

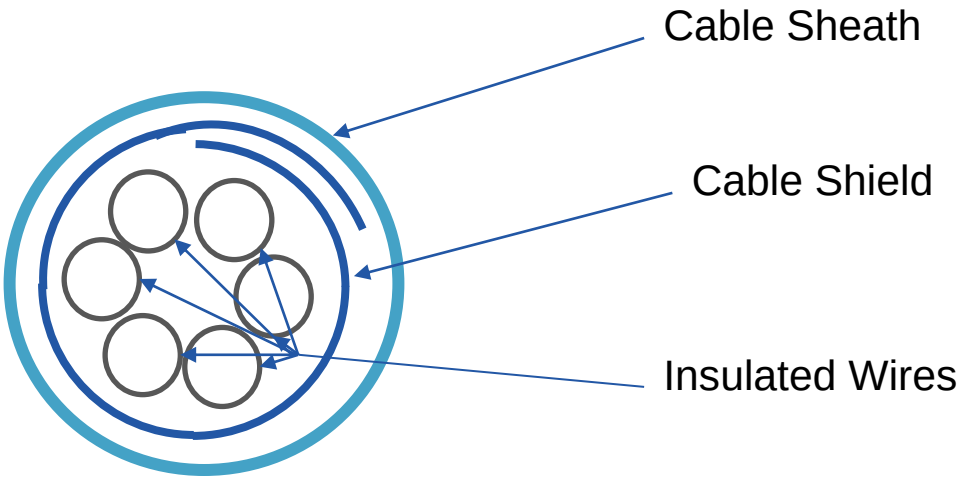

Fig.: Cable Shield with bad connection

Cable shield – 360°

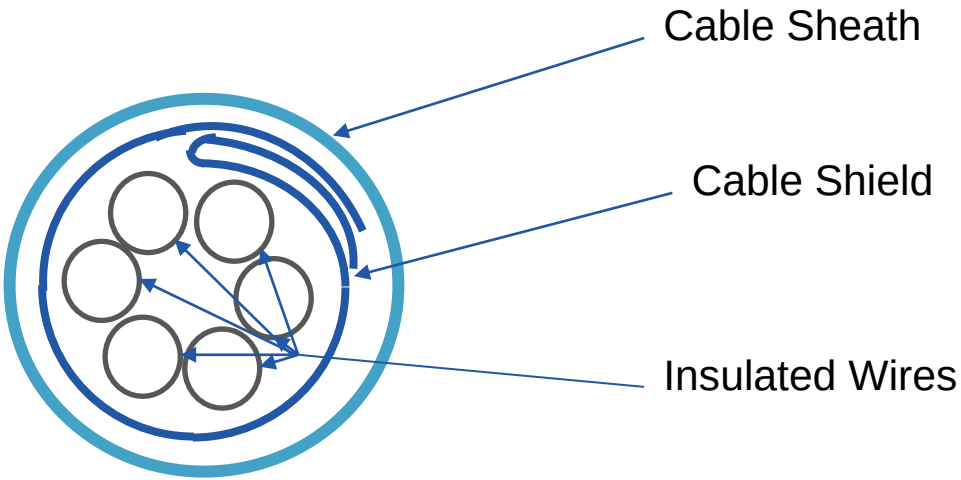

Fig.: Cable Shield improved

Input Filter

- Low Pass – remove high frequencies
- AC instability seen at the input
- Acoustical noise (whining, whistling, …)
- Middlebrook Criterion: $Z_{out,filter} << Z_{in,converter}$

Filter

Z_G	Z_L	Simple Filter	Advanced Filter	Amplification possible
∞	∞	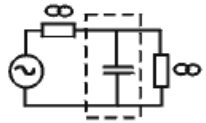	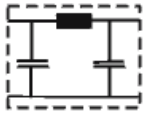	No
0	0	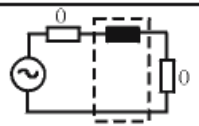	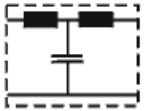	No
0	∞	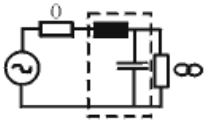	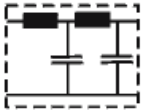	Yes
∞	0	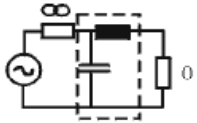	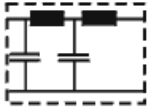	Yes

Fig.: Filter topologies [2]

Main Power Filter

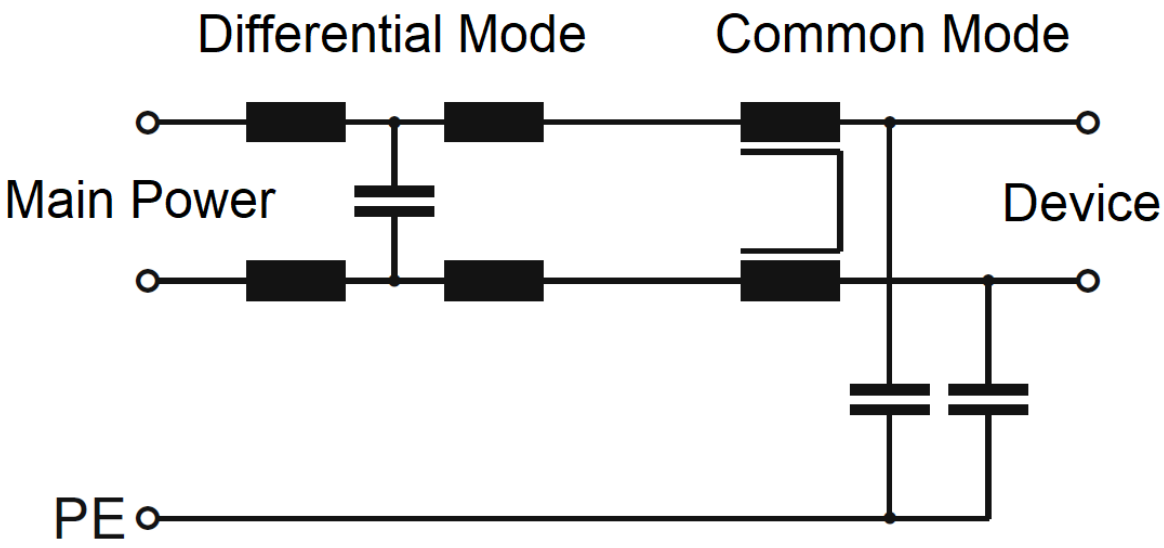

Fig.: Generic Filter [4]

Type of Distortion: Differential Mode

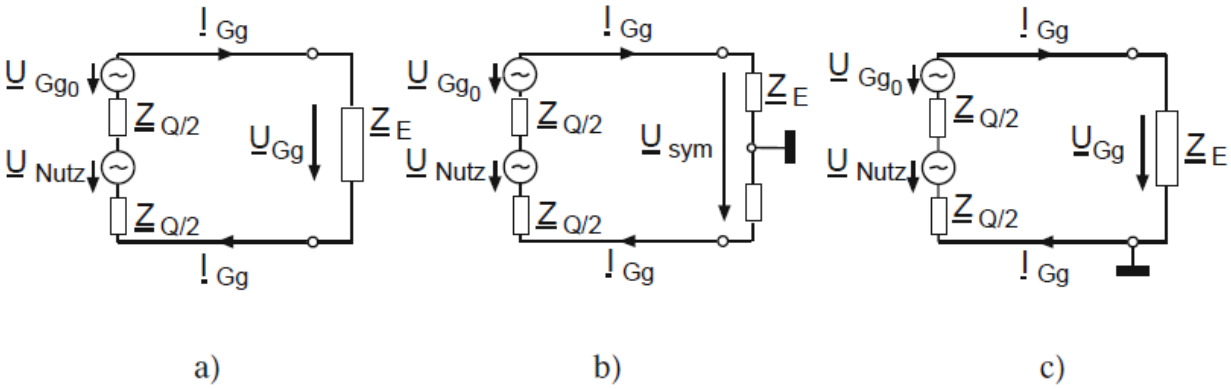

Fig.: Variations in differential mode interference [4]

a: Circuit without grounded connection
b: Circuit operated symmetrically
c: Circuit operated unsymmetrically

Type of Distortion: Common Mode

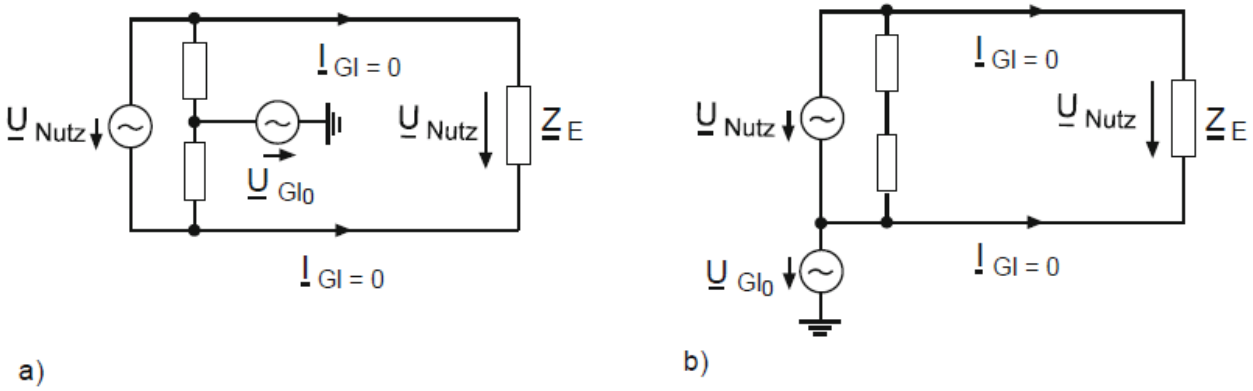

Fig.: Variations of common mode interference [4]

a: Circuit operated symmetrically
b: Circuit operated unsymmetrically

Common Mode Interference in a Class II Power Supply

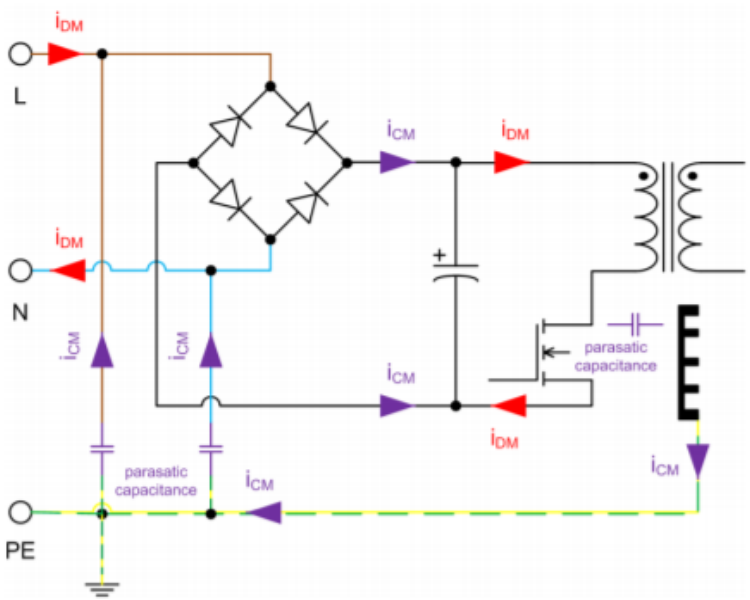

Fig.: Parasitic path to protective earth (PE) [5]

Coupling Capacitance:
directly proportional to area and inversely proportional to gap distance

CM Capacitor

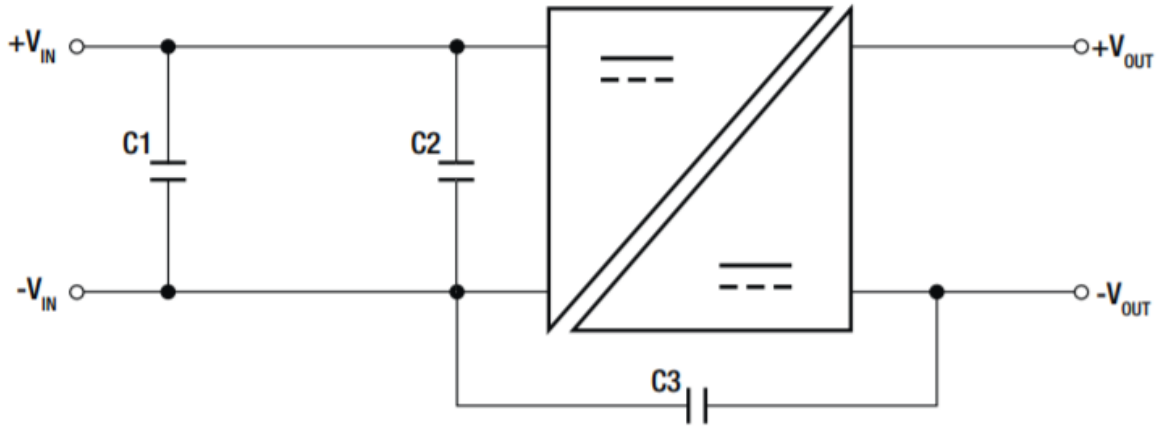

Fig.: Filter Suggestion from RECOM datasheet

C3 is required in many cases to reduce the CM interference emissions

CM Capacitor

- For example: Flyback

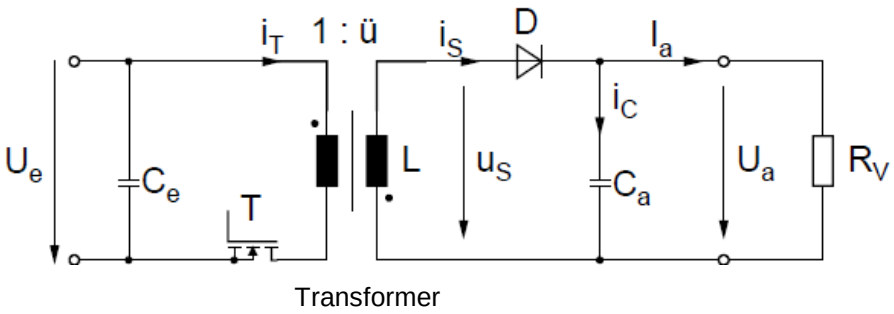

Fig.: Principle of a flyback converter [6]

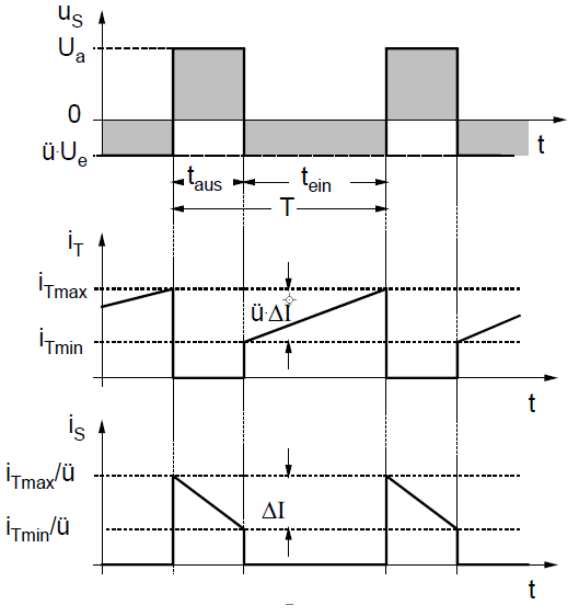

Fig.: Current and voltage waveforms of a flyback [6]

Layerstack

- Power planes for low impedance path
- Power planes used as shielding
- Power planes used as HF-path – low impedance due to capacitance

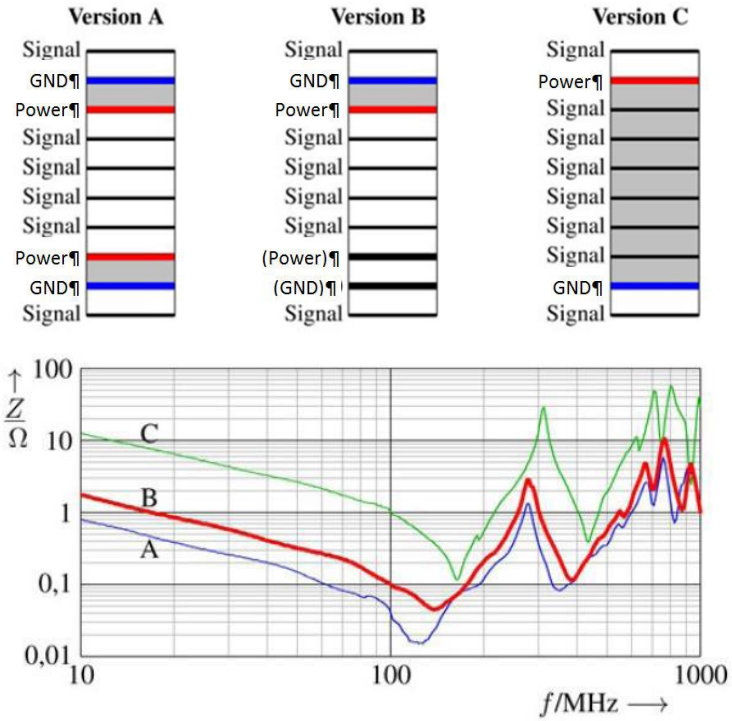

Fig.: Layerstack [1]

Component placement of parallel devices

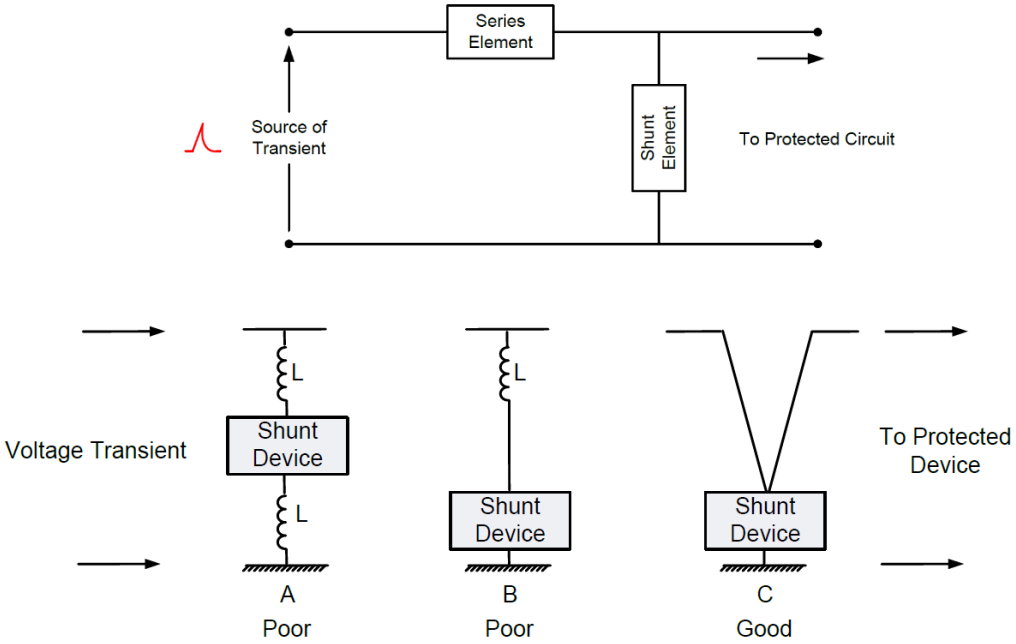

Fig.: Protective devices [7]

- HF-Path, as short as possible
- Place parallel components where needed, not far away
- Each length of trace has an inductive value

Capacitor on stubs

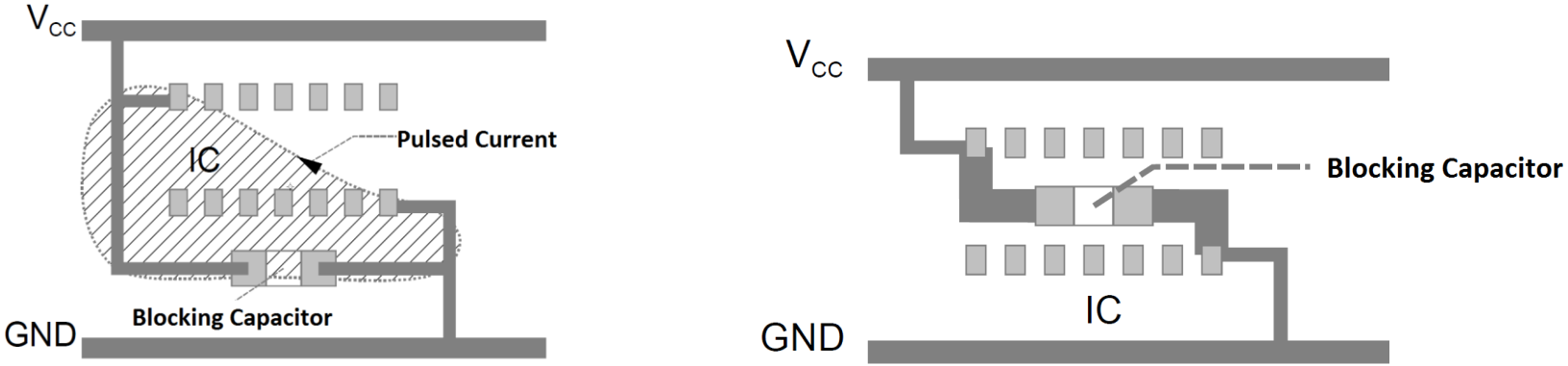

Fig.: Connection of capacitors [1]

Capacitor on Stubs - Correction

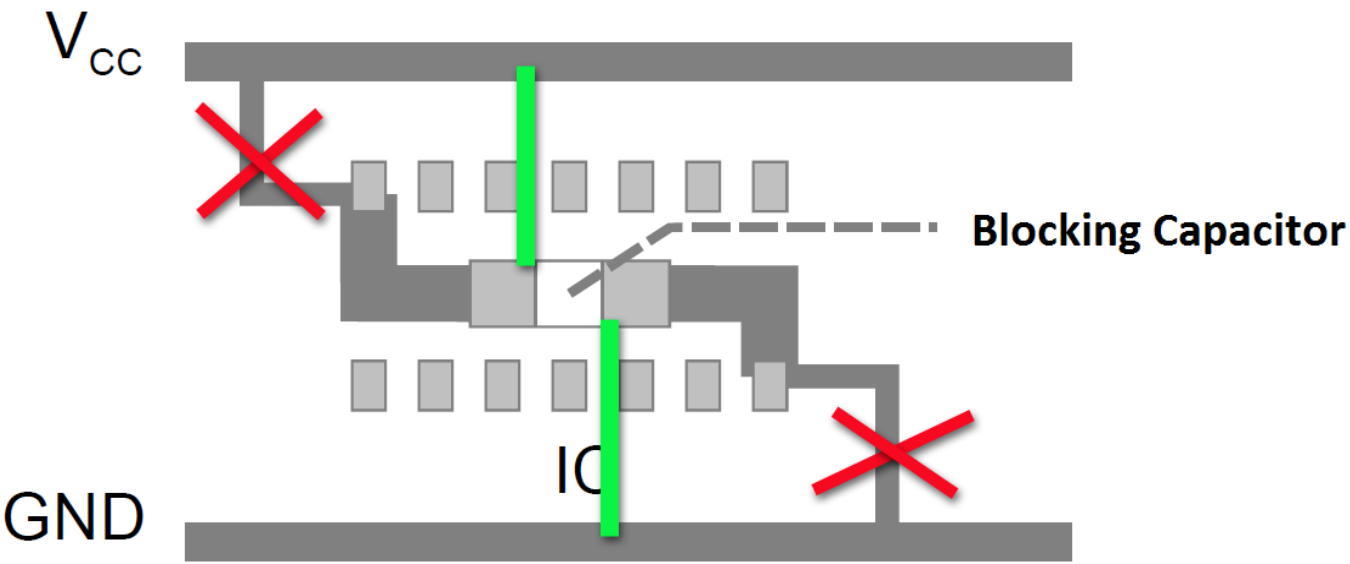

Fig.: Improved Connection of capacitors [1]

First time fail

- Action List to mitigate “First Time Fail”
- Allocation of frequency ranges
- Mitigation in system design
- Recommendations for troubleshooting

Action List for EMC Troubleshooting

- Detection
  - Locate
  - Isolate
  - Differentiate
- Countermeasures
  - Grounding
  - Wiring layout
  - Filter
  - Shielding

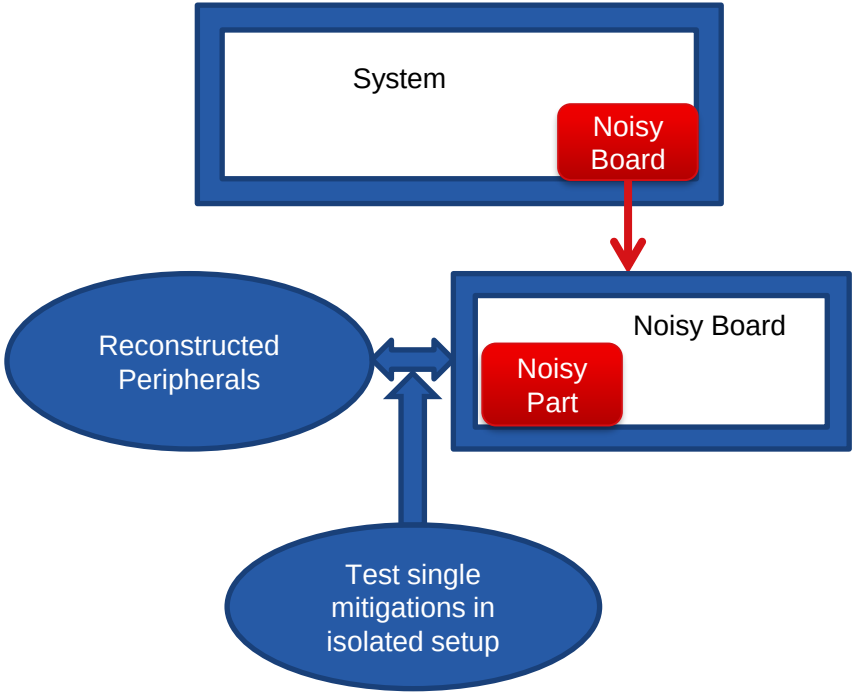

Fig.: Procedure when EMC limits are exceeded

Type of Interference and Mitigation Measures vs. Frequency

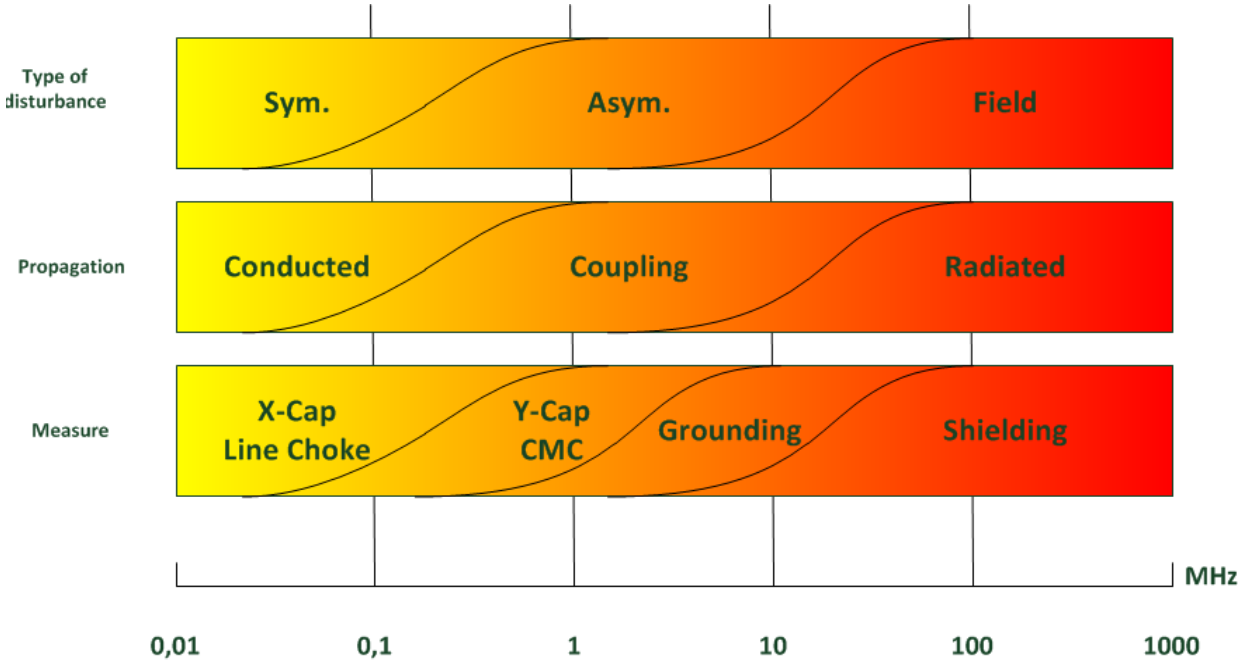

Fig.: Overview of the frequency range [8]

Shielding – Skin depth

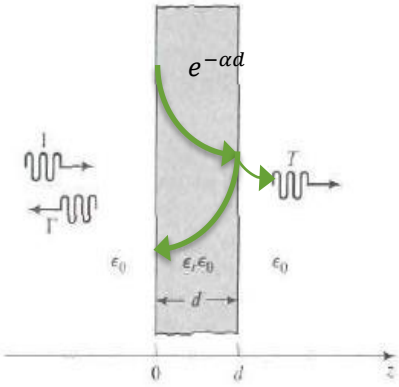

Fig.: Effect of shielding [9]

$$\delta_S = \sqrt{2/(\omega\mu\sigma)} = 2{,}09x10^{-6}m$$
$$\eta_C = (1+j)/(\sigma\delta_S) = 8{,}2x10^{-3}(1+j)\Omega$$

δ_S = Skin depth
η_C = intrinsic impedance

$$\Gamma = \frac{\eta_C - \eta_0}{\eta_C + \eta_0} = 1\angle 179{,}99°$$

Grounding and Shielding

- Avoid slots in metal planes and surfaces
- Slots act like antennas; ideal antenna at λ/4, but effect starts at λ/10

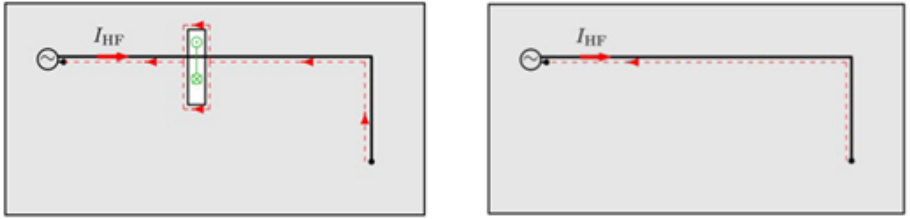

Fig.: Planes [1]

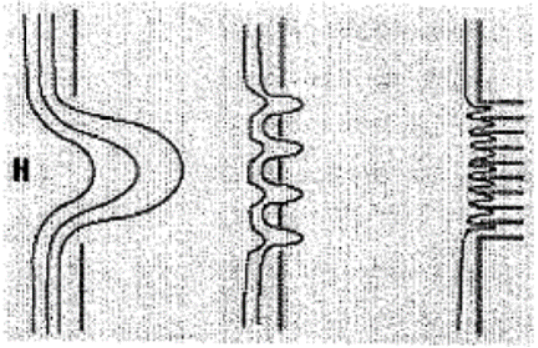

Fig.: Slot antenna [10]

Filters

- Differential Mode
- Common Mode
- Combined CM/DM

Fig.: Ferrites [15][16]

Fig.: Combined filter [17]

Cable Shielding

- Use shielded cables
- Check the quality of the shield
- Connect the shield at both ends (GND)
- Connect the shield to ground/PE

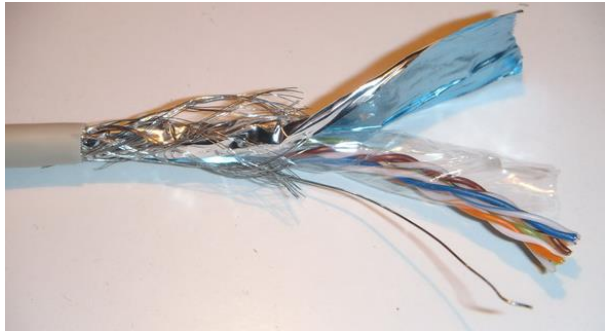

Fig.: Shielded cable[18]

Use a Systematic Approach

- Make only one change per measurement
  - Top-Bottom or Bottom-Top approach
- Verify any action that appears to have an effect
  - Change it back to see if effect remains
- Work precisely!
  - Even a small inaccuracy can completely destroy the validity of the measurement.

Overview

- EMC countermeasures start at the draft stage
- The earlier EMC is considered in the design, the more time, cost and space efficient the countermeasures will be.
- To meet the requirements, the remedial actions very often have to be combined.

Sources

1. EMV – Störungssicherer Aufbau elektronischer Schaltungen
   Franz, Joachim; Springer Vieweg, 5. Auflage, 2013

2. EMV für Geräteentwickler und Systemintegratoren
   Gonschorek, K. H.; Springer, 2005

3. Elektromagnetische Schirmung
   Hans A. Wolfsperger; Springer Verlag, 2008

4. Elektromagnetische Verträglichkeit;
   Adolf J. Schwab ; Springer Verlag 2011; 6. Auflage

5. Application Note: Line Filter- The last barrier in the switch mode power supply
   Stefan Klein, Würth Elektronik;

Sources

6. Schaltnetzteile und ihre Peripherie
   Schlienz, Ulrich; Vieweg Praxiswissen, 3. Auflage, 2007

7. AN80994; Design Considerations for EFT Immunity
   ShrutiHanumanthaiah, Srinivas NVNS, Cypress

8. Elektromagnetische Verträglichkeit bei Schaltnetzteilen
   Keller, Günther; Workshop 36, EMV Stuttgart, 2015

9. Microwave Engineering;
   David M. Pozar; John Wiley & Sons; 4. Auflage, 2011

10. EMI Design Recommendations
    Hermann Möhring; Fujitsu; 2011

Sources

11. GBR/CAA; http://www.gbrcaa.org/ntoa/Filters,%20Chokes%20and%20OIs.htm, 12.02.2016

16. Pollin; http://www.pollin.de/shop/dt/MTM3OTQ3OTk-/Bauelemente_Bauteile/Passive_Bauelemente/Spulen_Filter/Ferrit_Ringkern_ZCAT2132_1130.html, 12.02.2016

17. BLOCK; http://www.block.eu/en_IN/products/458756.html, 12.02.2016

18. network lab; http://www.nwlab.net/guide2na/netzwerkanalyse-verkabelung.html, 12.02.2016

Contact

Josefine Lametschwandtner B.Sc.
Team Leader EMC Engineering

Münzfeld 35, 4810 Gmunden, Austria
Techsupport@recom-power.com
+43 7612 88 325 713

Maximilian Bichler
EMC Engineer

Münzfeld 35, 4810 Gmunden, Austria
Techsupport@recom-power.com
+43 7612 88 325 768

Jianjun Chen
Field Application Engineer

Münzfeld 35, 4810 Gmunden, Austria
Techsupport@recom-power.com
+43 7612 88 325 756

Live-Measurement

Q & A

Webinar Presented by PSMA

The principal activities of PSMA include:

- Co-Sponsors the Applied Power Electronics Conference (APEC)
- Provides and maintains a Web Site with relevant industry and member information
- Conducts regular member surveys to identify areas of importance or concern
- Develops standard industry terminology
- Generates and publishes technology and market reports
- Provides regulatory agency interface
- Organizes technical workshops and seminars
- Coordinates with other power related organizations
- Facilitates benchmarking studies with member companies
- Promotes liaison with users, academia and government

PSMA Benefits:

- **Networking:** Opportunity to meet and interact with your counterparts in other companies on an on–going basis
- **Valuable Information:** Members enjoy access to information in the Members Only area of the PSMA website
- **Involvement:** Opportunity to be involved with the planning and managing of APEC--Applied Power Electronics Conference--sessions that focus on the specific interests of members
- **Participation:** Participate in committees, workgroups and studies to derive a better understanding of market trends, industry trends and better operational procedures to improve performance
- **Discounts:** Receive discounts on registration fees for attending APEC
- **Finding Trends**: Increase awareness and knowledge of trends and factors that can impact your company
- **Company Profile:** Listing of your company's profile on the PSMA Web Site with a hyperlink directly to your company's Web Site
- **PSMA Publications**: Receiving a copy of all new PSMA publications and reports with discounts for additional copies
- **Benchmarking:** Improve the operation of your company by participating in bench marking studies with other companies in your industry
- **PSMA Newsletter**: Receive "Update" -- the quarterly newsletter of the PSMA, which provides information on upcoming events and activities in the industry
- **Member Company Spotlight Banner**: Feature your company's products on the PSMA Home Page

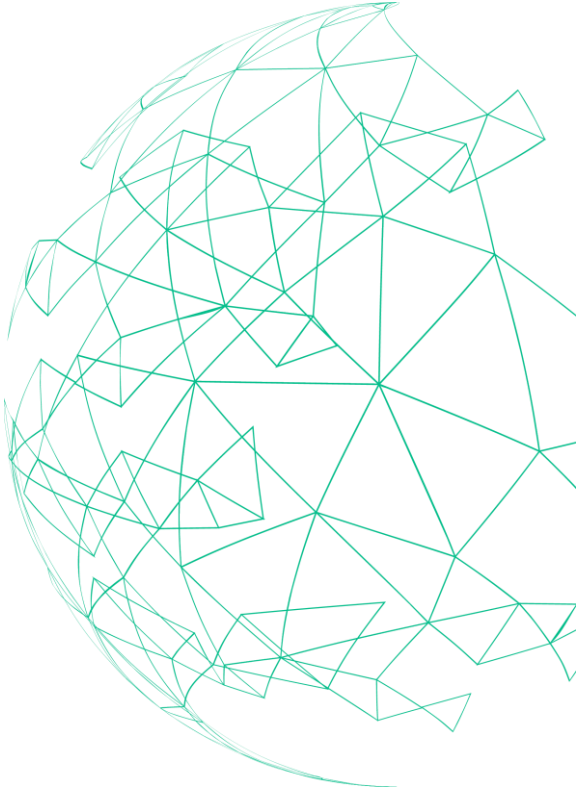

Thank you!