EMI Filter Safety

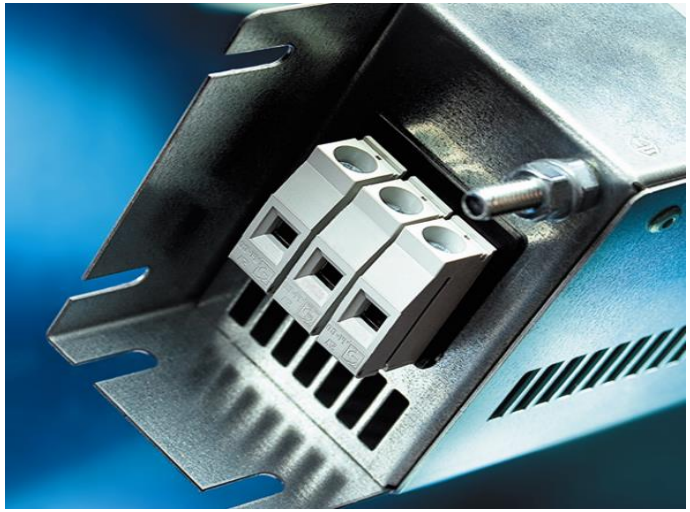

Herbert Blum
Product Manager EMC

EMI Filter Safety

SCHURTER ELECTRONIC COMPONENTS

> Application with high EMI noise over the standard limits

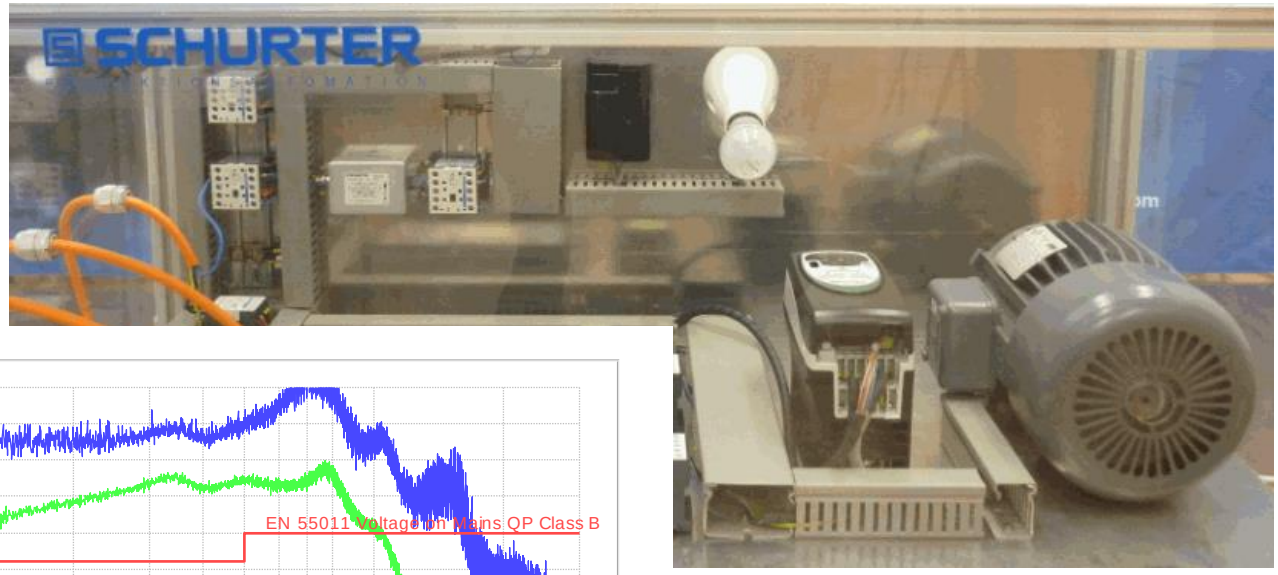

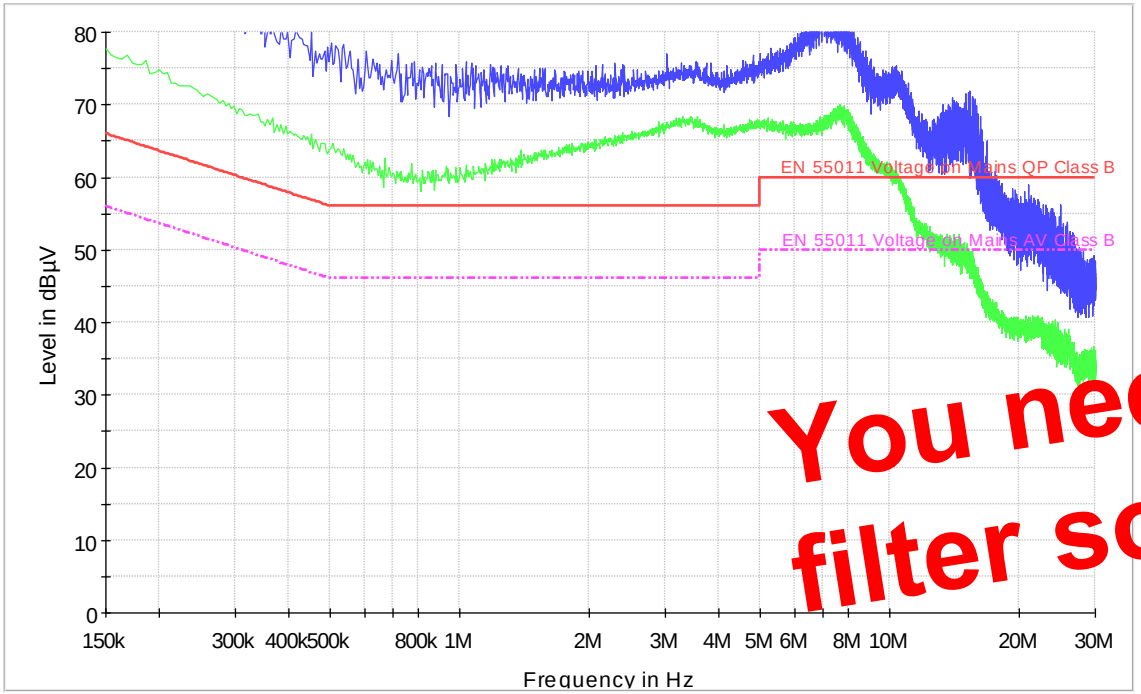

You need a filter solution !

EMI Filter Safety

SCHURTER ELECTRONIC COMPONENTS

Filter

- Basic requirements
  - Voltage DC/AC / no. of phases
  - Current, inrush / leakage current
  - Attenuation: dB @ kHz, sym./asym.
  - Dimensions, weight, connection
  - Safety approvals

- Additional requirements
  - High voltage tests
  - Leakage currents
  - Inrush / overcurrents (e.g. SCCR)
  - Environment: temperature, humidity, vibration
  - Durability (MTBF)
  - Service: CAD and simulation data

Filter safety

Filter data sheet

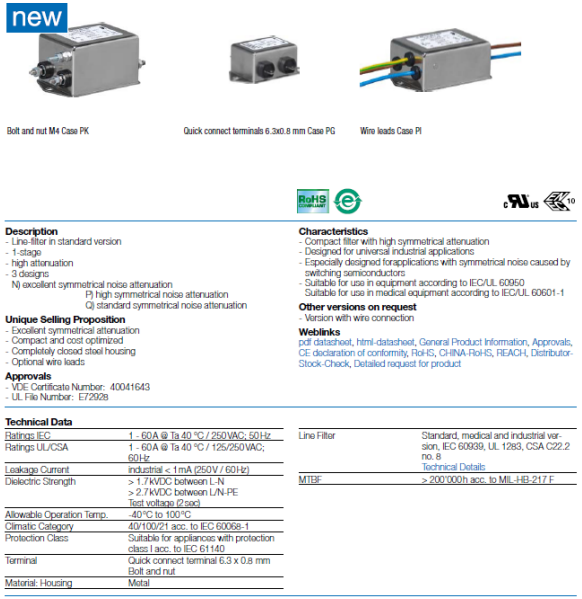

new

Bolt and nut M4 Case PK | Quick connect terminals 6.3x0.8 mm Case PG | Wire leads Case PI

Description
- Line-filter in standard version
- 1-stage
- high attenuation
- 3 designs
  N) excellent symmetrical noise attenuation
  P) high symmetrical noise attenuation
  Q) standard symmetrical noise attenuation

Unique Selling Proposition
- Excellent symmetrical attenuation
- Compact and cost optimized
- Completely closed steel housing
- Optional wire leads

Approvals
- VDE Certificate Number: 40041643
- UL File Number: E72928

Characteristics
- Compact filter with high symmetrical attenuation
- Designed for universal industrial applications
- Especially designed forapplications with symmetrical noise caused by switching semiconductors
- Suitable for use in equipmant according to IEC/UL 60950
- Suitable for use in medical equipment according to IEC/UL 60601-1

Other versions on request
- Version with wire connection

Weblinks
pdf datasheet, html-datasheet, General Product Information, Approvals, CE declaration of conformity, RoHS, CHINA-RoHS, REACH, Distributor-Stock-Check, Detailed request for product

Technical Data

Ratings IEC	1 - 60A @ Ta 40 °C / 250VAC; 50Hz
Ratings UL/CSA	1 - 60A @ Ta 40 °C / 125/250VAC; 60Hz
Leakage Current	industrial < 1mA (250V / 60Hz)
Dielectric Strength	> 1.7kVDC between L-N > 2.7kVDC between L/N-PE Test voltage (2sec)
Allowable Operation Temp.	-40°C to 100°C
Climatic Category	40/100/21 acc. to IEC 60068-1
Protection Class	Suitable for appliances with protection class I acc. to IEC 61140
Terminal	Quick connect terminal 6.3 x 0.8 mm Bolt and nut
Material: Housing	Metal

Line Filter	Standard, medical and industrial version, IEC 60939, UL 1283, CSA C22.2 no. 8 Technical Details
MTBF	> 200'000 h acc. to MIL-HB-217 F

SCHURTER ELECTRONIC COMPONENTS

Filter high voltage tests

> Standard requirements

Standard	Rated voltage	L – L	L - PE
IEC 60939-2	250 VAC	1075 VDC	1500 VAC / 2250 VDC
UL 1283, CSA 22.2 no. 8	250 VAC	1000 VAC / 1414 VDC	1500 VAC / 2121 VDC
IEC 60939-2	480 VAC	2064 VDC	2000 VAC / 3000 VDC
UL 1283, CSA 22.2 no. 8	480 VAC	2000 VDC	2031 VAC / 2872 VDC

- AC: 50/60Hz, 60 sec.
- Test source min. 500 VA

> Attention:
repetition of the voltage proof test may damage the filter!

Filter high voltage tests

- Filter tests with AC voltage cause leakage current through capacitors
  - Example: 1µF 1500V 60Hz = 560mA (840 VA) !

$$I = 2\pi \times f \times U \times C$$

- Do HV tests on filters with DC ✓

SCHURTER ELECTRONIC COMPONENTS

Filter high voltage tests

- Voltage ramp-up time
- Too fast ramp-up time cause errors because of capacitor charging

$$I = C\frac{\Delta V}{\Delta t}$$

(without internal and series resistance)

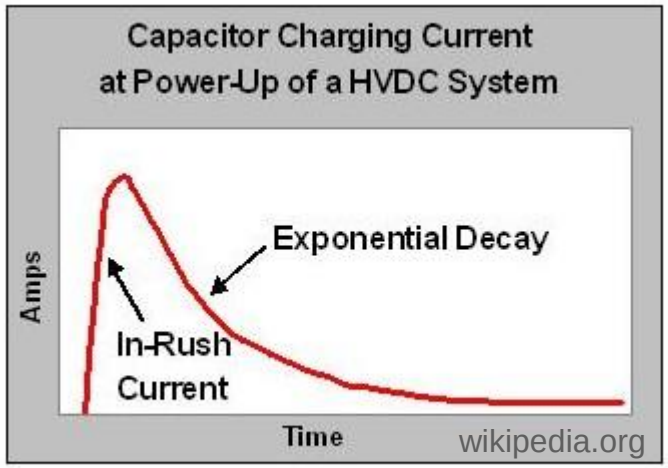

- Example:
  - 3 phase filter tested
  - 3000 VDC test L – PE
  - ramp-up 5 sec. max. current 17mA

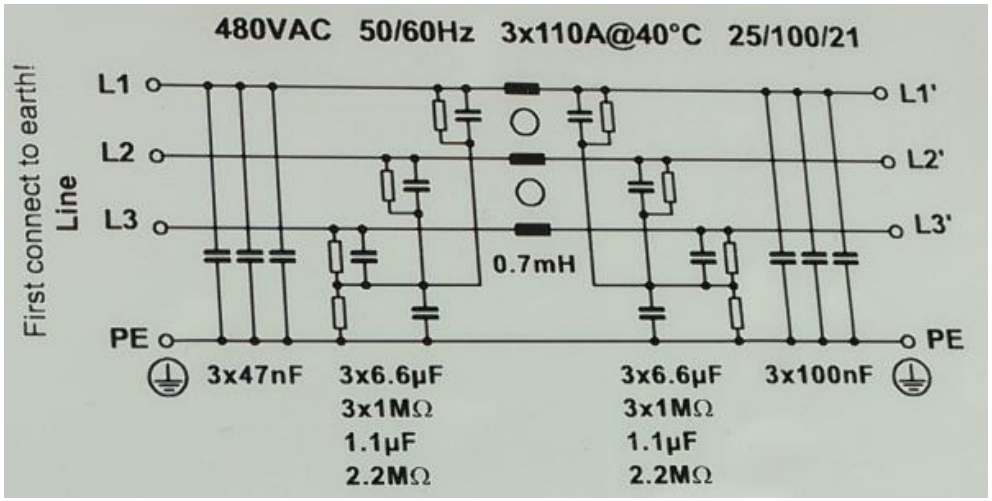

SCHURTER ELECTRONIC COMPONENTS

High voltage tests on equipment with EMI filter

- Do HV tests with DC ✓
- Be aware of the charge currents of the capacitors ✓
- Not too fast voltage ramp-up time ✓
- Don’t do repetition of HV test too many times ✓
- Some application standards allow to disconnect the filter for HV tests ✓
  - Example: IEC / UL 60950-1 (IT Equipment)
  - Test voltage AC 50/60Hz, or DC equal, 60 sec.
  - NOTE 2 Where there are capacitors across the insulation under test (for example, radio-frequency filter capacitors), it is recommended that d.c. test voltages are used.
  - NOTE 3 Components providing a d.c. path in parallel with the insulation to be tested, such as discharge resistors for filter capacitors and voltage limiting devices, should be disconnected.

SCHURTER ELECTRONIC COMPONENTS

Leakage Currents

- Leakage currents, are currents that under normal operation not returns through the neutral or line conductor

- **Direct coupling** through capacitors e.g. Y-capacitors in mains filter wired from line to ground
  - to calculate $I = 2\pi \times f \times U \times C$

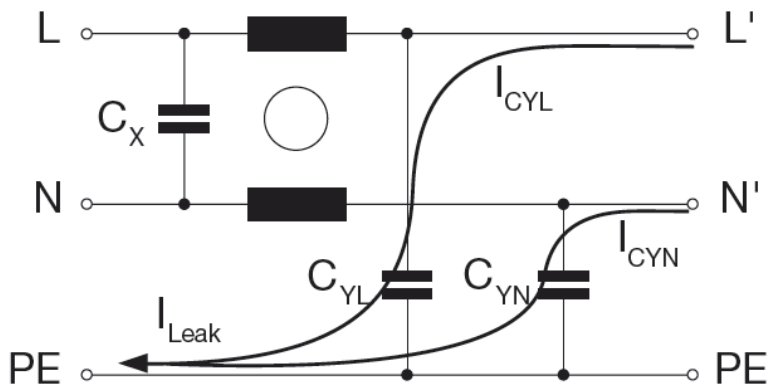

- **Capacitive coupling** from line to ground e.g. cable shielded or long cables to chassis
  - Capacity often unknown
  - Higher frequencies generate high leakage currents
  - Long shielded cable = high capacity

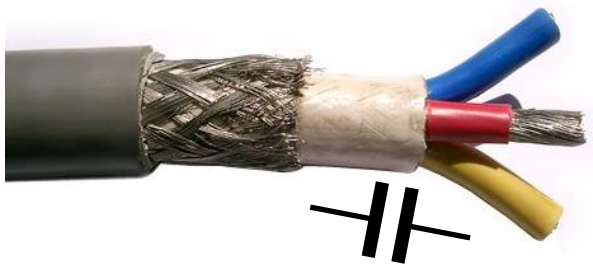

capacity between shield and wires

SCHURTER ELECTRONIC COMPONENTS

Filter leakage currents

- In EMC filters, capacitors from all conductors are wired to ground
- Current is continually flowing through each of these Y-capacitors, and the amount depends on the size of the capacitor, grid voltage and the frequency

Example

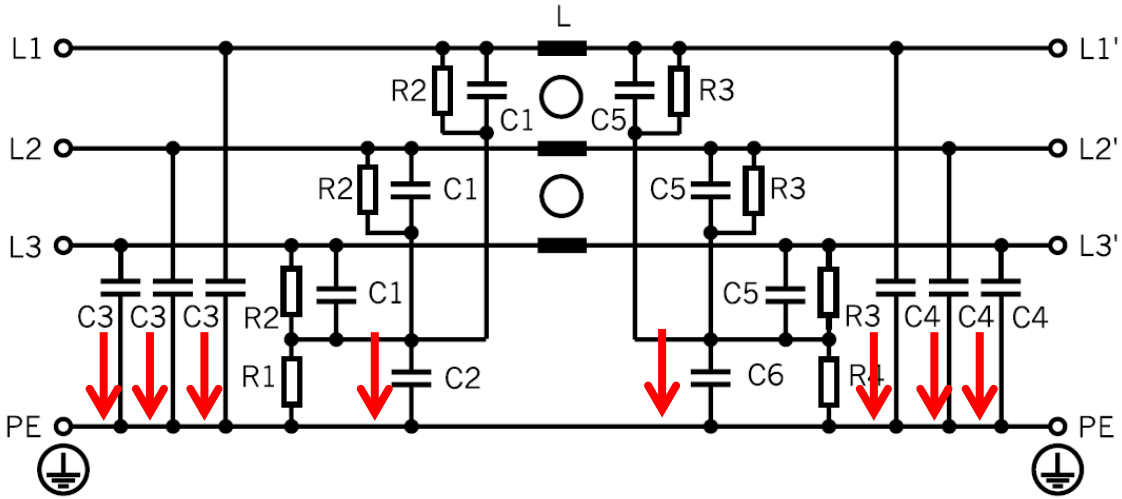

leakage currents

- Most filter manufacturers specify the maximum expected leakage current so that it is easier to select the most suitable filter

EMI Filter Safety

SCHURTER ELECTRONIC COMPONENTS

> Leakage currents on filters data sheets

Technical Data

Rated Current	6 - 1100 A
Rated voltage	480/520 VAC, 50/60 Hz
Approval for	6 - 1100 A @ Ta 40 (75) °C / 520 VAC; 50 Hz
Overload Current	1.5 x Ir
Leakage Current	industrial < 5 mA (440 V / 50 Hz)
Dielectric Strength	480 VAC: 2.25 kVDC between L-L 3 kVDC between L-PE

Leakage current under normal condition acc. IEC60950-5.2.5

Variants

Rated Current @ Ta 40°C (75°C) [A]	Characteristic	Rated Voltage [VAC]	Tripped Power Dissipation [W]	Leakage Current [mA] 1)
8 (5)	Excellent attenuation	480	5.38	40
16 (10)	Excellent attenuation	480	8.83	40
16 (Pending)	High voltage filter	520	8.83	26
16 (10)	Excellent attenuation	-	8.83	40
25 (15)	Excellent attenuation	-	8.25	156
25 (14)	High attenuation	-	9.86	156

> **Worst case** leakage current acc. to IEC60950 - Annex G4 (situation with two interrupted lines)

Leakage current in frequency inverters

> In inverter the associated harmonics of the switching frequency can have very large amplitudes at higher frequencies

> These frequencies are on the motor cables and the motor

> the motor cables with their grounded shields act like a capacitor to ground

> Current is then diverted to earth through this capacitance

> The same currents are flowing to ground inside the inverter and motor

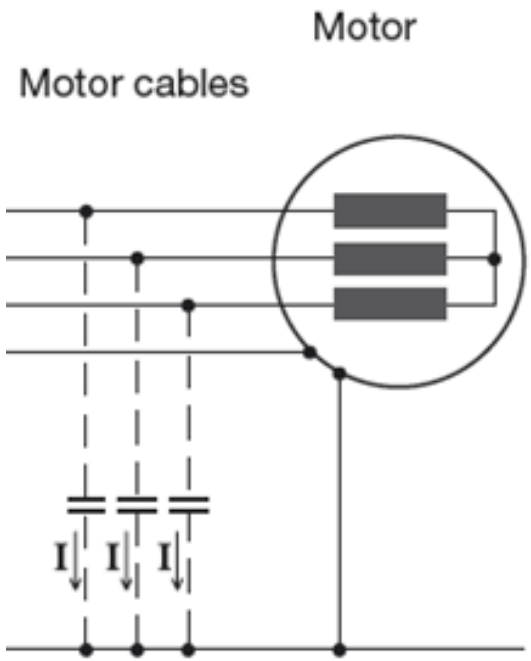

SCHURTER ELECTRONIC COMPONENTS

Leakage currents in frequency inverter system

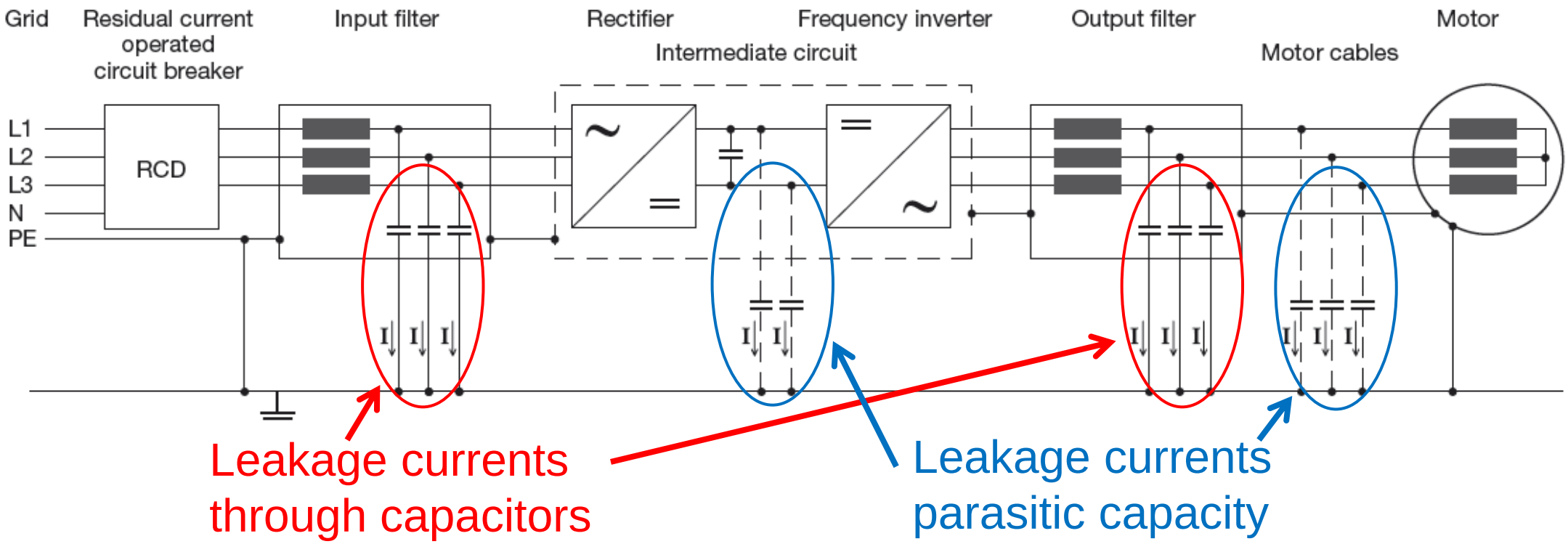

> Leakage currents in frequency inverters arise through internal interference-suppression measures and all parasitic capacitances in the inverter and motor cables

Transient leakage currents

- Transient leakage currents can arise when the system is turned on or off
- Depending on the phase angle, turning the system on, can result in steeply rising voltage spikes as a result of the fast voltage increase
- These fast voltage spikes generate a transient leakage current to ground through the filter capacitors

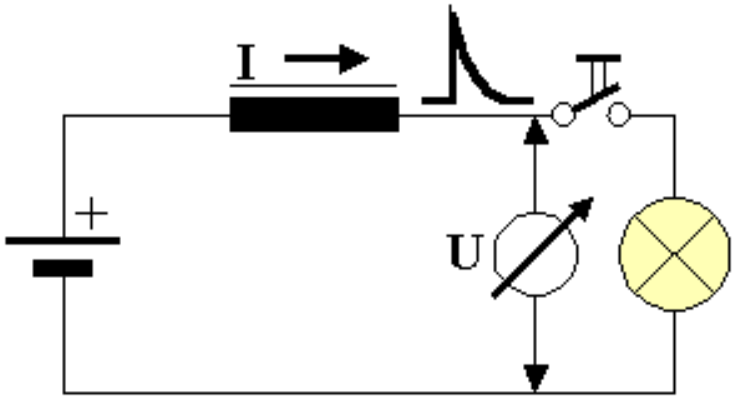

SCHURTER ELECTRONIC COMPONENTS

System leakage currents

- Mains frequency leakage currents of the EMI filter are known by the capacity to ground
- Overall capacity of an inverter system are mostly not known
- Leakage currents might occur over a wide frequency range
- RCD shuts down operation when leakage currents are too high
- RCD shuts down when system is first turned on or off (Residual-Current Device)

- **What to do ?**

Leakage current measurement

- It is recommended to measure the leakage current for every newly installed machine
- The simplest method for doing so is to measure the current on the ground conductor with a clip-on ammeter

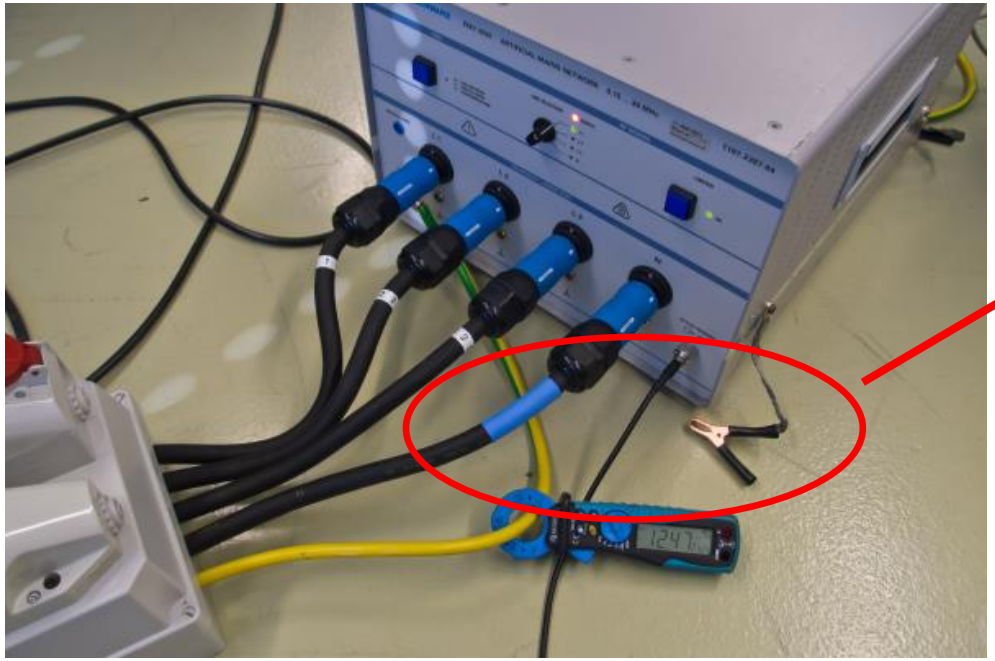

- Most clip-on ammeters display only 50-Hz current !

Leakage current measurement

> Most clip-on ammeters display only 50-Hz current, and thus a better way to measure the value is with a leakage-current analysis system.

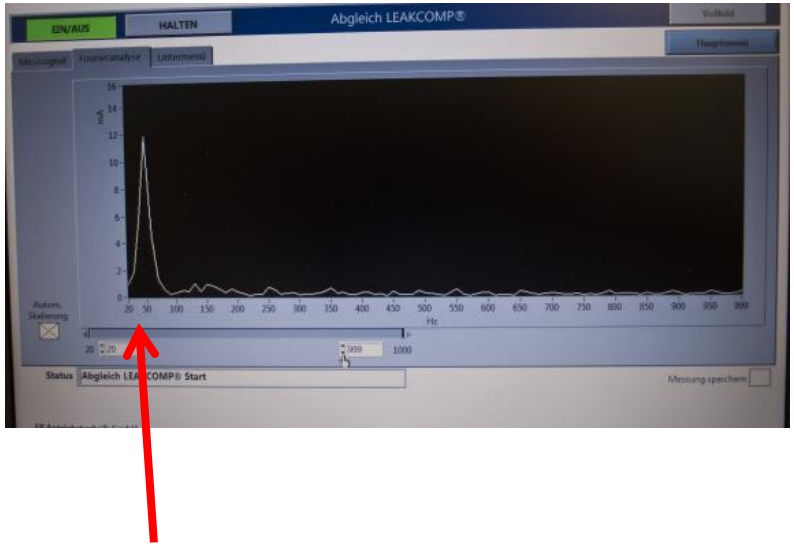

50Hz leakage current

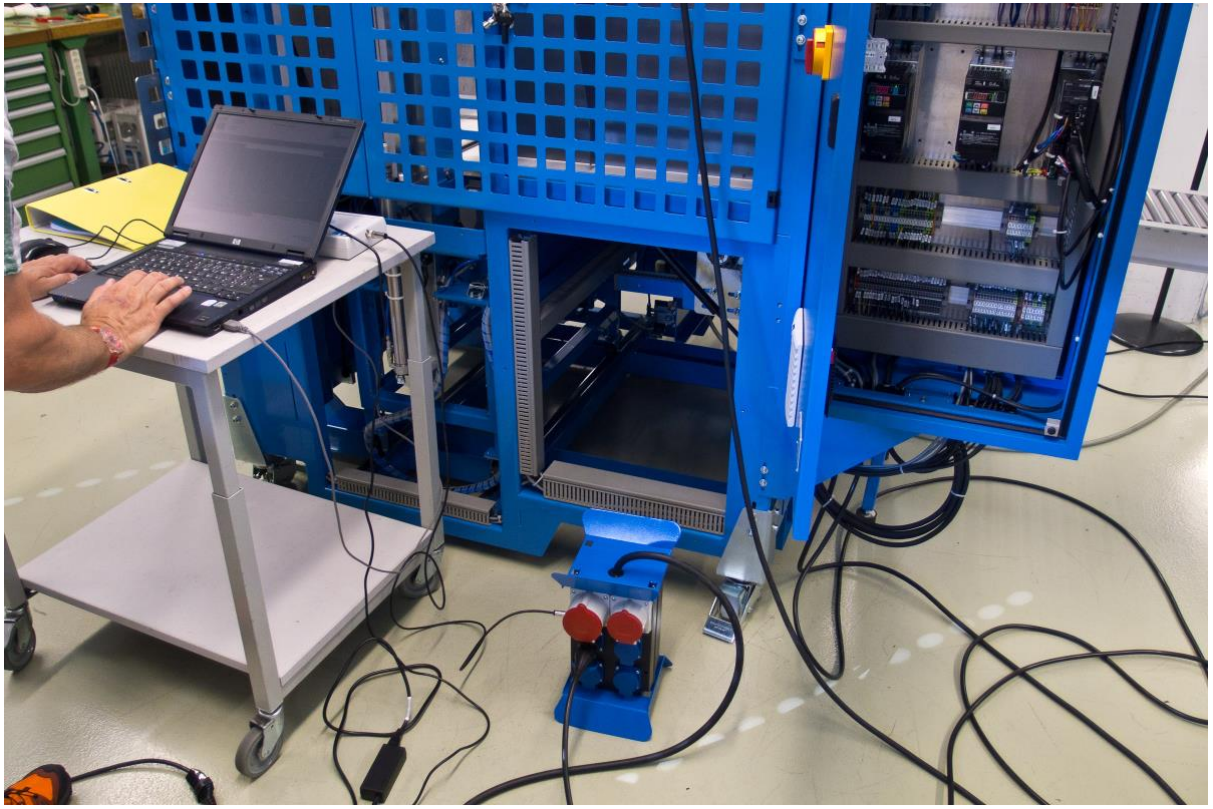

SCHURTER ELECTRONIC COMPONENTS

Measurement over frequency range

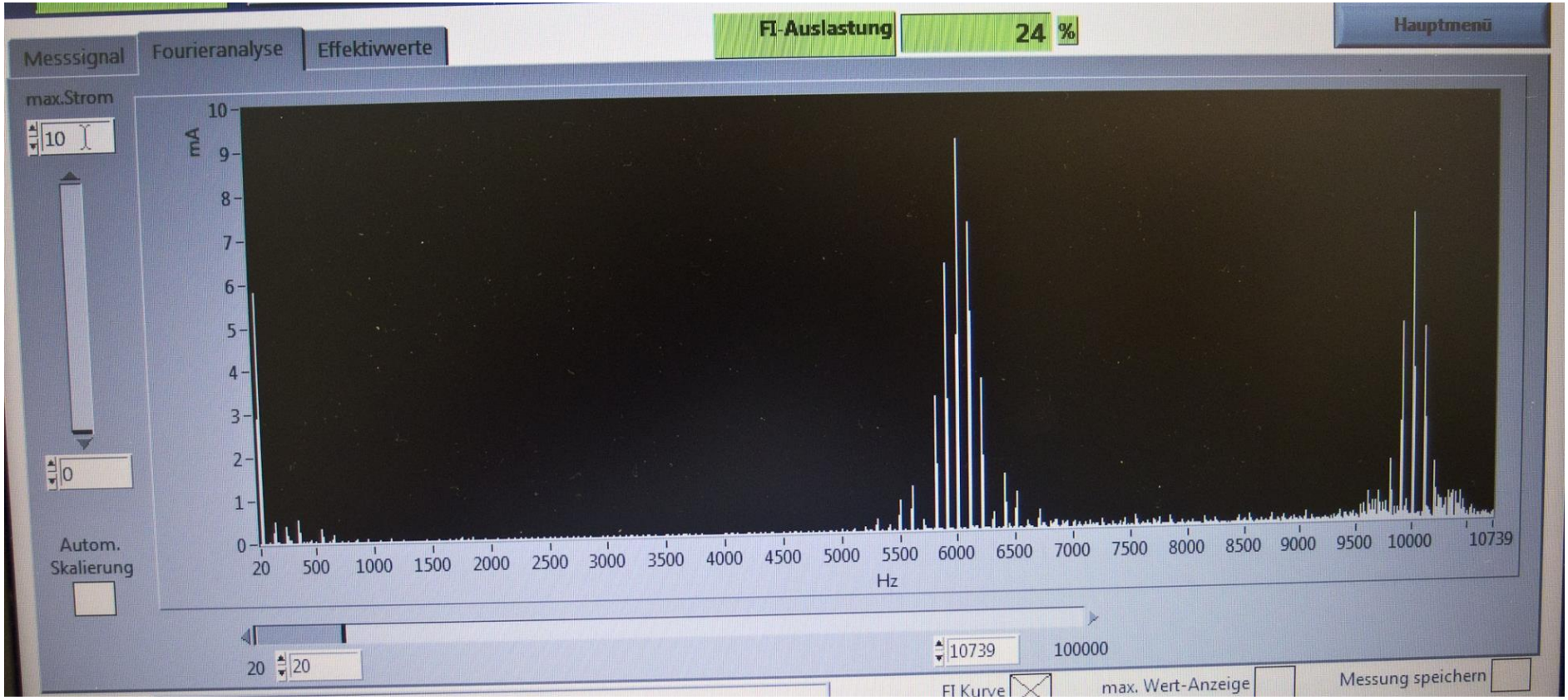

50Hz **6kHz** **10kHz**

> Leakage current in higher frequency ranges (9 mA @ 6 kHz) can be larger than at 50 Hz (6 mA @ 50 Hz)!

Practical example

> 2 different filters for a motor drive

EMI Filter Safety

SCHURTER ELECTRONIC COMPONENTS

> 2 different filters for a motor drive

FMAC ECO (single stage)

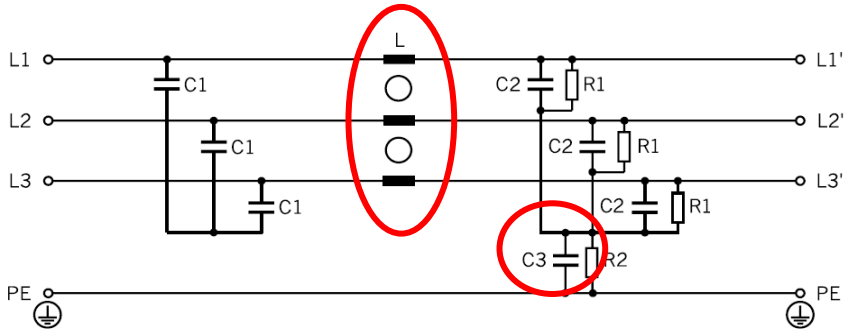

3 x 0.57 mH **3.3 µF = max. 240mA**

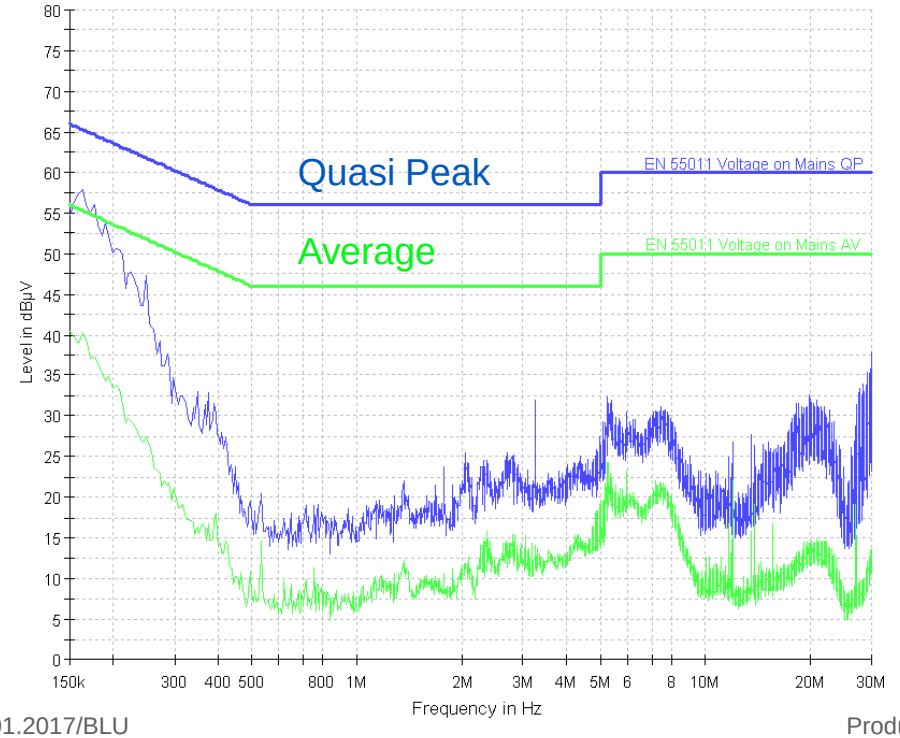

FMBC ECO (double stage)

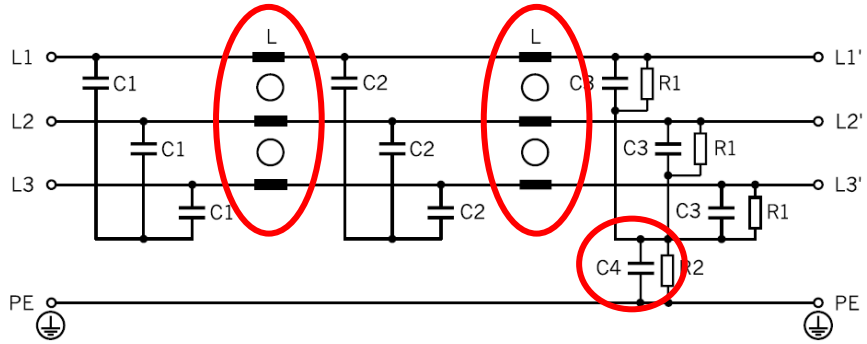

6 x 0.9 mH **47 nF = max. 4mA**

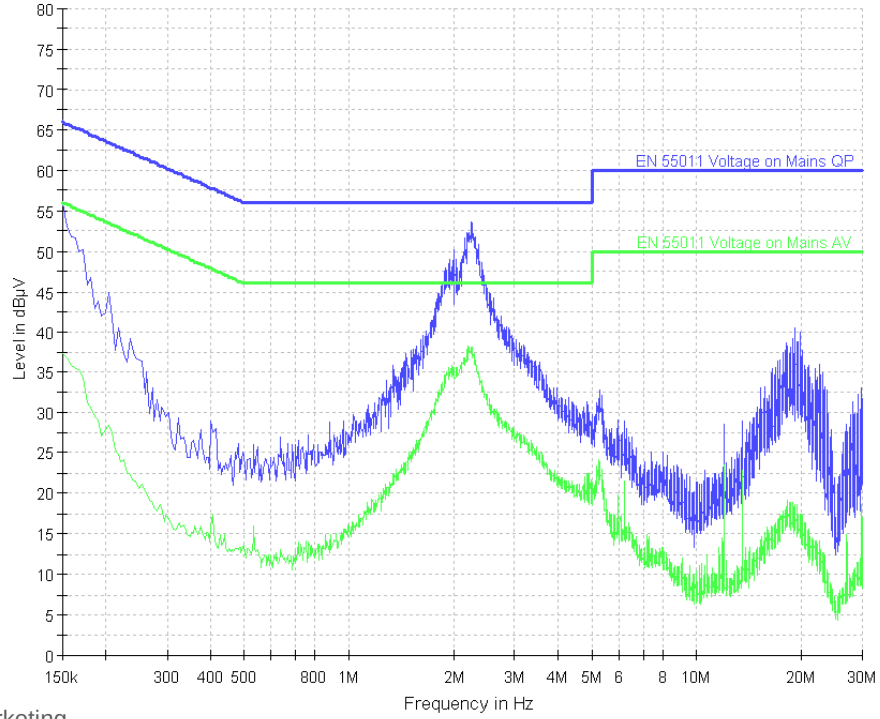

EMI Filter Safety

Big Y-capacitors to ground

⇨ cheap, compact, good attenuation but high leakage currents!

FMAC ECO (single stage)

Replacement of the Y-capacitors with an additional choke

⇨ expensive, bigger, good attenuation and small leakage currents

FMBC ECO (double stage)

SCHURTER ELECTRONIC COMPONENTS

Reducing leakage currents

> Placing the frequency **inverter close to the motor**
⇨ shorter shielded cables = lower capacity = lower leakage current

> **Output filter** (sinewave filter) on the drive output
⇨ It effectively attenuates leakage currents above 1 kHz by reducing the slew rate of the motor voltage

> **Central filter** at the grid input instead of a filter for each inverter
⇨ saves money and space but also reduces the leakage current

> **Power-line chokes**
⇨ reduces the current's ripple factor along with harmonics and thus provides for smaller leakage currents

Reducing leakage currents

> **4-conductor filter** with a neutral instead of a 3-conductor filter
⇨ Y-capacitors are connected between the phase conductors and the neutral conductor

3 conductor filter FMAC

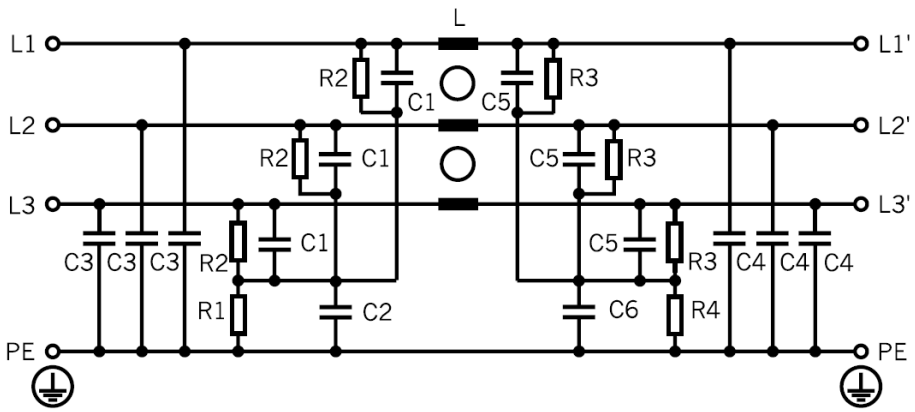

8 Y-capacitors to PE

⇨ high leakage current

4 conductor filter FMBD

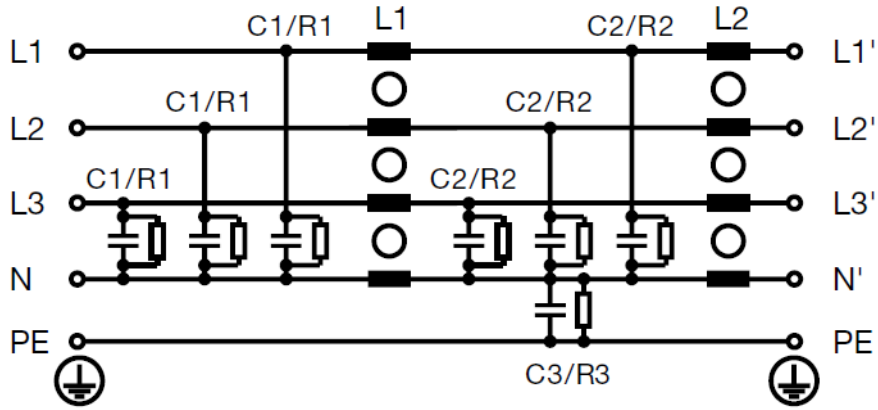

1 Y-capacitors to PE

⇨ small leakage current

SCHURTER ELECTRONIC COMPONENTS

Reducing leakage currents

- Separate circuits in RCD protected / non protected areas
- Separate filtered and unfiltered cables
- Starting up the system / frequency inverter in steps
- Overvoltage protection to protect against voltage spikes
- A RCD with delayed response characteristics
- A differential RCM (residual current measuring device)
- Low leakage-currents filters
  - Medical filters
  - 3 phase industrial filters with low leakage currents

SCHURTER FMBC LL
3 phase low leakage current filter

Thank you for your attention