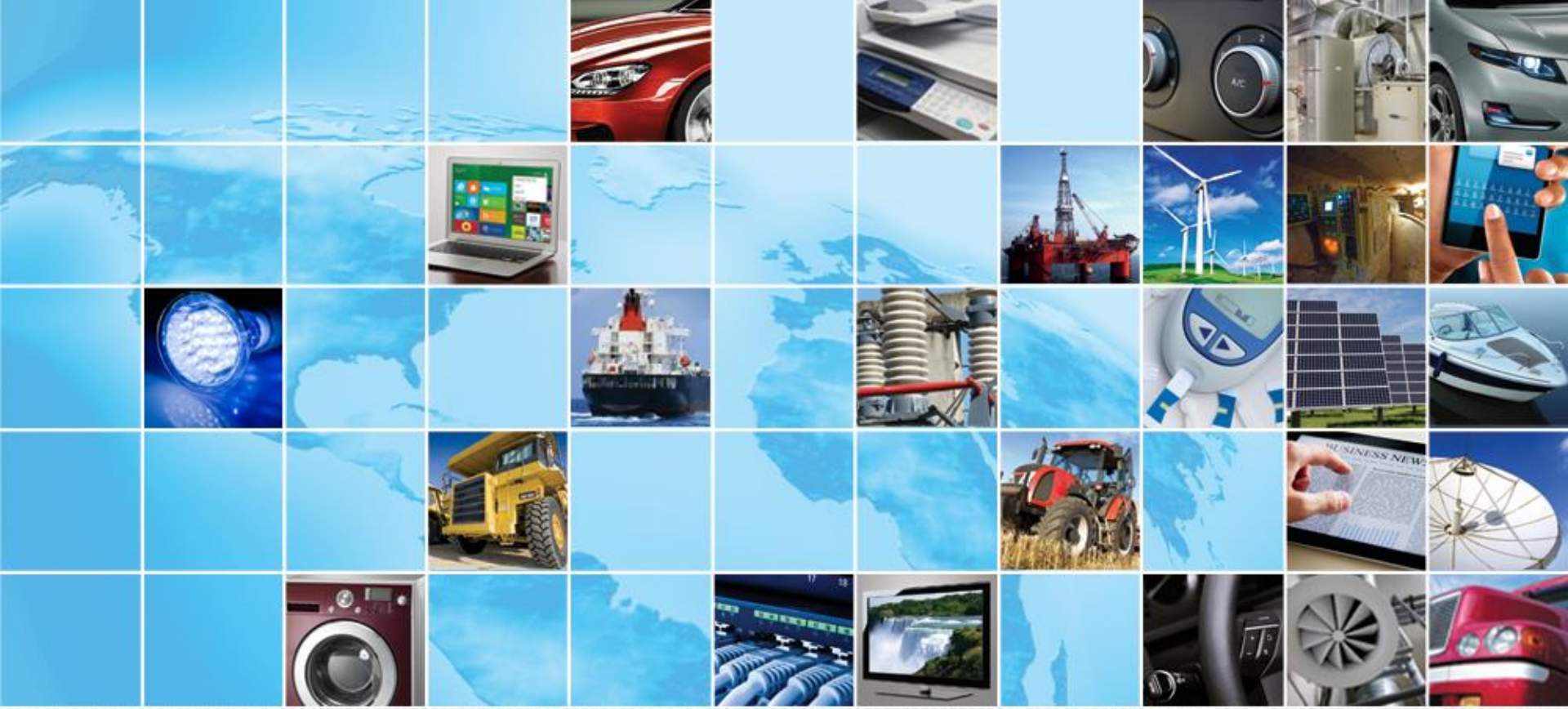

Surges and Transients Can’t Read Specifications!

How to Meet Specifications and Protect Against Real-World Threats

Tim Patel, P.E.
Global Marketing Manager – Electronics Business

Littelfuse®

Expertise Applied | Answers Delivered

What if…?

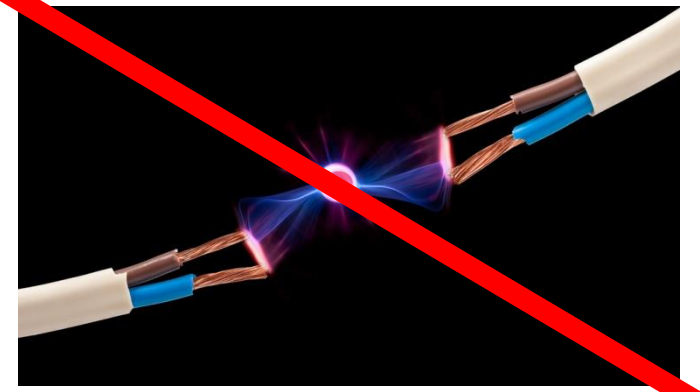

+

=

Global Safety & Surge Immunity Standards: There are so many!!

	United States	Europe S. America	Japan	Taiwan	China	Korea
Surge Immunity (Combo wave) 1.2×50µs Voc/ 8×20µs Isc Integrated LED light bulbs (E27 Base Europe/E26 Base USA) (LED retrofit lamps and indoor commercial)	Energy Star (Based on IEEE C62.41.2) Ring wave 2.5kV 100kHz Class A	IEC/EN 61547 IEC/ EN 61000-4-5 500V/250A 1kV/500A	JIS C 61000-4-5 (Based on IEC/EN 61000-4-5) 500V/250A 1kV/500A	CNS 14676-5 (Based on IEC/EN 61000-4-5) 500V/250A 1kV/500A	GB/T 18595 (Based on IEC/EN 61547) 500V/250A 1kV/500A	K61547 (Based on IEC/EN 61547) 500V/250A 1kV/500A
Surge Immunity (Combo wave) 1.2×50µs Voc/ 8×20µs Isc LED Outdoor Luminaires (Street Lighting, Parking Lot Lighting)	DOE (Based on IEEE C.62.41.2) Category C-Low 6kV/3kA Category C-High 20kV/10kA ANSI/NEMA (spec. no. TBD)	IEC/EN 61547 IEC/ EN 61000-4-5 4kV/2kA 6kV/3kA 10kV/5kA	JIS C 61000-4-5 (Based on IEC/EN 61000-4-5) 4kV/2kA	CNS 14676-5 (Based on IEC/EN 61000-4-5) 4kV/2kA	GB/T 17626.5 (Based on IEC/EN 61000-4-5) 4kV/2kA	KS C IEC61000-4-5 (Based on IEC/EN 61000-4-5) 4kV/2kA
Safety	UL 8750, UL 1310, UL 1993, UL 1598	IEC/EN 62560 bulb IEC/EN 60598 Luminaire IEC/EN 61347 driver IEC/EN 62031 LED array/module	DENAN standards JEL 801	CNS standards	GB24819-2009/ IEC62031 LED Module for general lighting-safety	KS standards

SAFETY:

Short circuit / overload protection is required by most global standards

SURGE:

Tolerance to transient overvoltage events may be optional, but is **CRITICAL** for functionality and reliability

Surge Levels Vary By Environment!

- Surge environments defined by IEEE C62.41.1

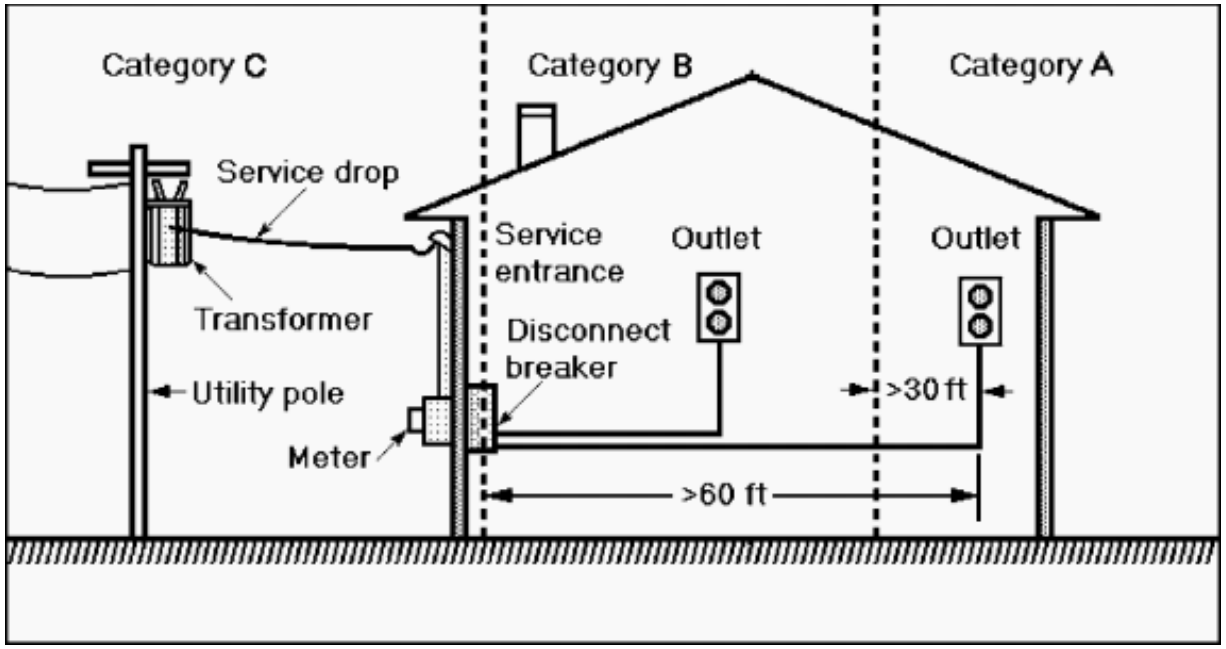

Category A: parts of the installation at some distance from the service entrance
Category B: Between Cat A and Cat C
Category C: External part of structure, extending some distance into the building.

Energy Star Surge Testing per IEEE C62.41.1-2002 (USA)

- Standard: ENERGY STAR® Program Requirements for Integral LED Lamps, v1.4
- Waveform: 0.5µs, 100kHz wave

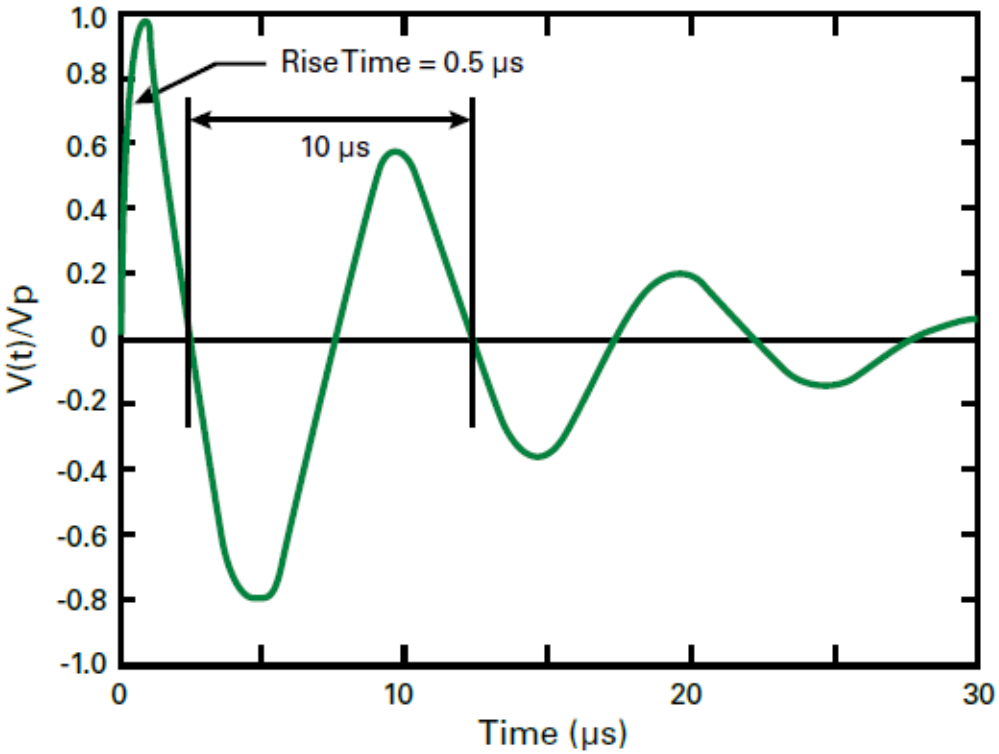

The 100 kHz Ring Wave (voltage and current)

- Test Level: 2.5kV/83A, Line-to-Line (class A operation)
- Number of Surges: 7 strikes in common mode and 7 in differential mode, 1 minute between each strike

Transient Surge Testing per IEC 61000-4-5 (Global Except USA)

- Waveform: 1.2x50 µs voltage / 8x20µs current combination waveform

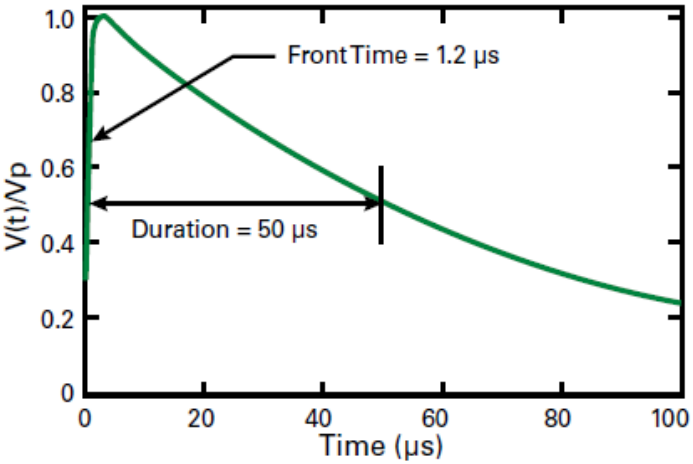

Combination Wave open-circuit voltage

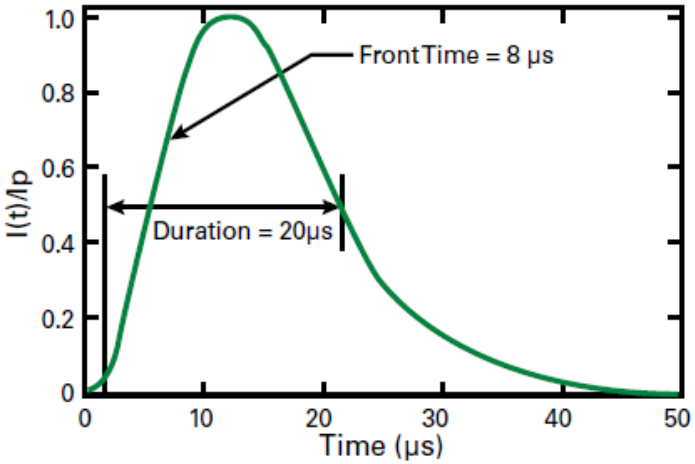

Combination Wave short-circuit current

- For self-ballast <u>lamps < 25W</u>: 500V/250A test (installation class 2)
  Apply 500V L-L with 2 ohms source impedance & 1kV L-G with 12 ohms
- For self-ballast <u>lamps > 25W</u>: 1000V/500A test
  Apply 1kV L-L with 2 ohms source impedance & 2kV L-G with 12 ohms
- Number of surges: 40 strikes, 5+ and 5- at phase angle 0/90/180/270, 1 minute interval between each strike

Commercial and Outdoor LED Lighting

Transient Surge Threats: The Problem with Outdoor Lighting

- Lightning strikes are traveling electrostatic discharges, usually coming from clouds to the ground with a magnitude of millions of volts.
- Surges up to thousands of volts are applied to copper wires carrying induced current from lightning strikes occurring up to a few miles away.
- These ***indirect strikes usually occur in exposed outdoor wires,*** transmitting surges to devices like streetlights or traffic lights.
- A **Surge Protection Module**, at the upstream of the circuitry, is directly facing surge interference coming from the power line. It diverts or absorbs surge energy, ***minimizing surge threats to downstream devices*** like the AC/DC power supply unit in an LED lighting fixture.

USA News_ Watch Lightning Electrify NYC Skyline.mp4

Example of "Multiple Hits" that could occur.

Worldwide Lightning Frequency

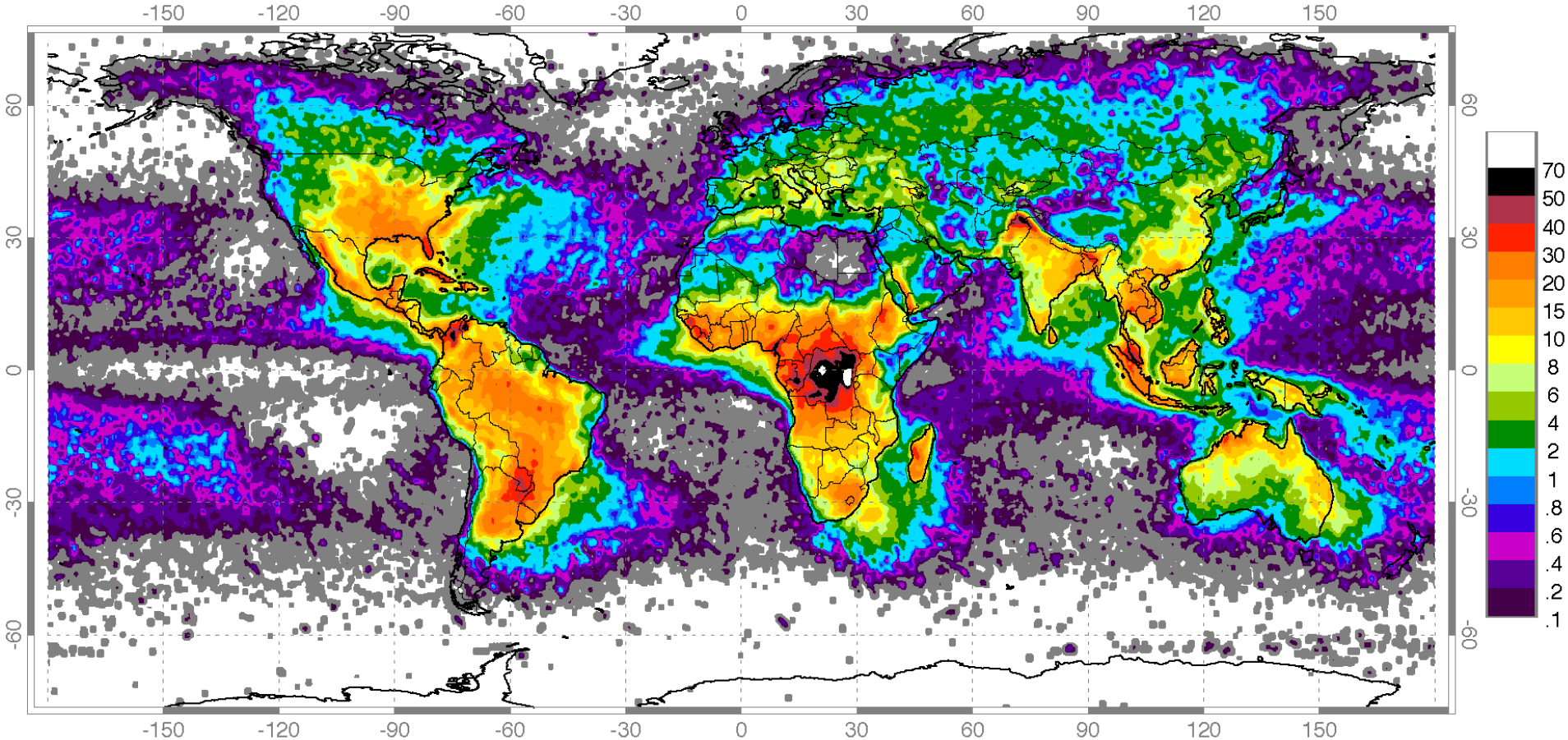

NASA Global Hydrology Resource Center
Units: flashes/km^2/year

Street Light & Outdoor Lighting Protection Scheme

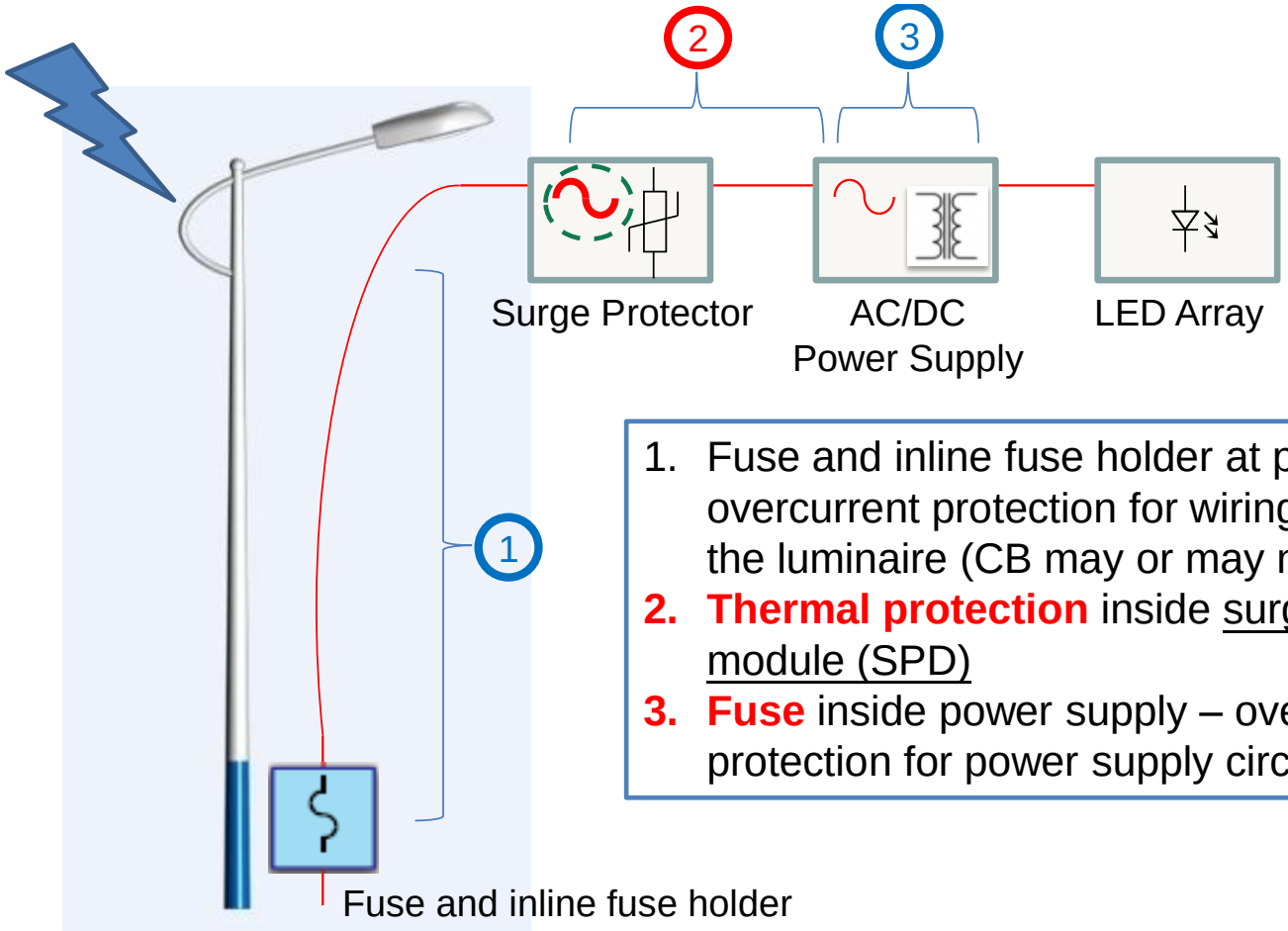

1. Fuse and inline fuse holder at pole base– overcurrent protection for wiring in the pole to the luminaire (CB may or may not be installed)
2. **Thermal protection** inside surge protection module (SPD)
3. **Fuse** inside power supply – overcurrent protection for power supply circuitry

Protection Components and Systems:
LED Luminaire Assembly

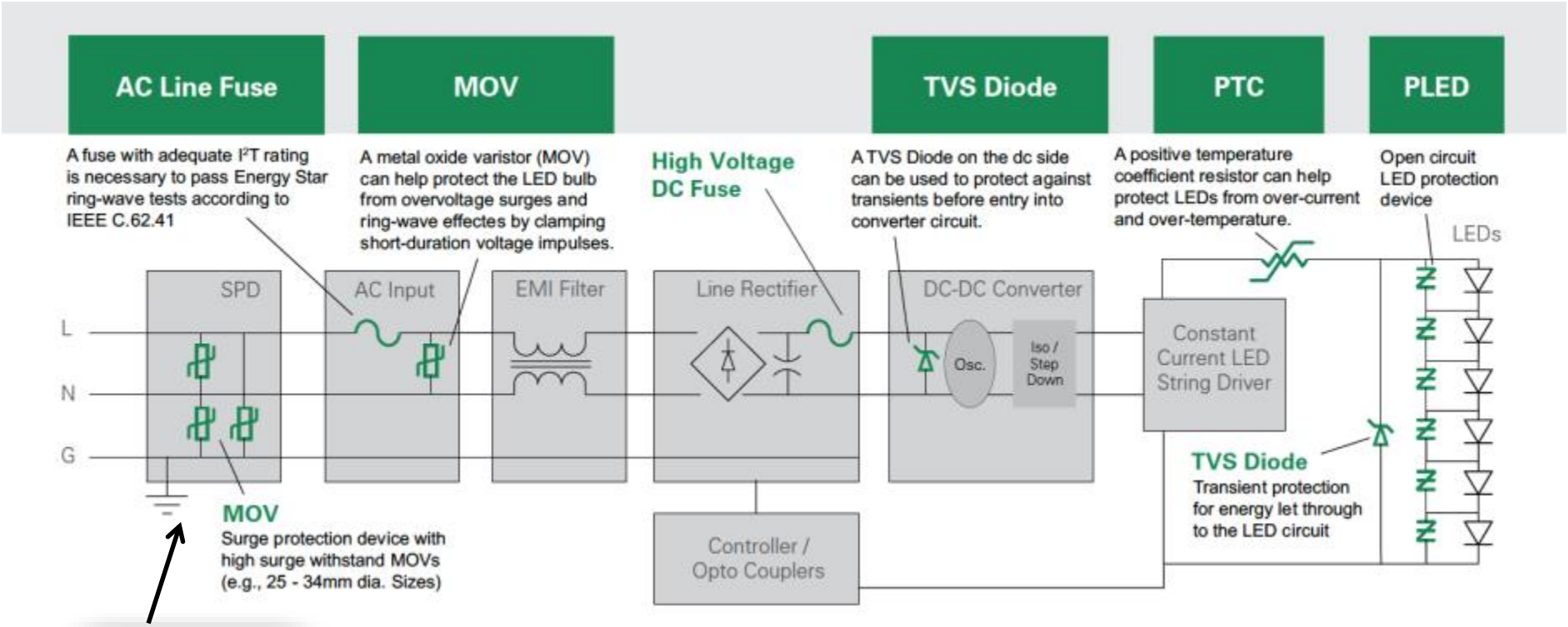

SPD Module
also known as Surge Arrestor

US Department of Energy Spec
Surge Testing Requirements for High Exposure Levels

Parameter	Test Level/ Configuration
1.2/50µs Open Circuit Voltage Peak	Low: 6 kV. High: 10kV*
8/20µs Short Circuit Current Peak	Low: 3 kA. High: 10kA
Coupling Modes	L1 toPE, L2 to PE, L1 to 72
Polarity and Phase Angle	Positive at 90° and Negative at 270°
Test Strikes	5 for each Coupling Mode and Polarity/Phase Angle combination
Time Between Strikes	1 minute
Total Number of Strikes	= 5 strikes × 3 coupling modes × 2 polarity/phase angles = 30 total strikes

*This is a MINIMUM requirement. Note that for most combination wave generators, which have a source impedance of 2Ω, the generator charging voltage will need to be raised above the specified level (to somewhere in the vicinity of 20kV) to obtain the specified current peak.

Waveform: 1.2x50µs open circuit voltage / 8x20µs short circuit current combination waveform

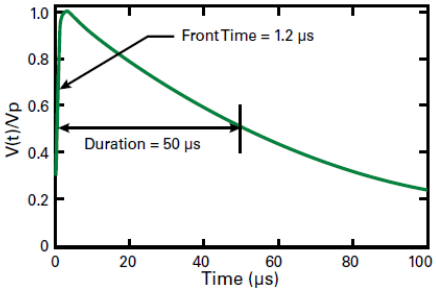

Combination Wave open-circuit voltage

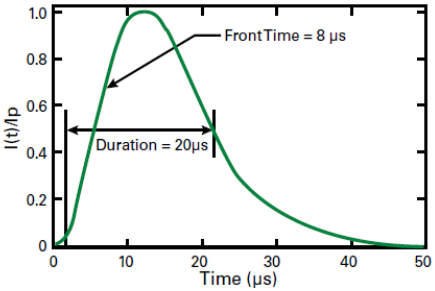

Combination Wave short-circuit current

Protecting Against Surges: MOVs

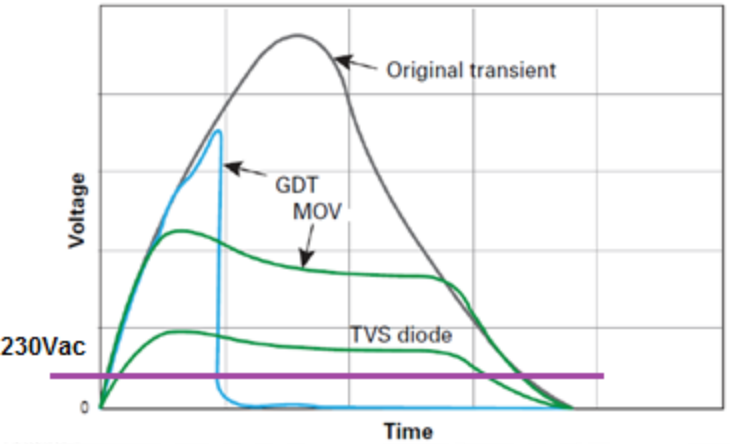

- TVS diode is best device as lowest clamping but costliest.
- Most suitable is MOV, highest protection in lowest cost
- But…. Every good thing has a limitation:
- MOV's have limited lifetime & need protection at end of life…..

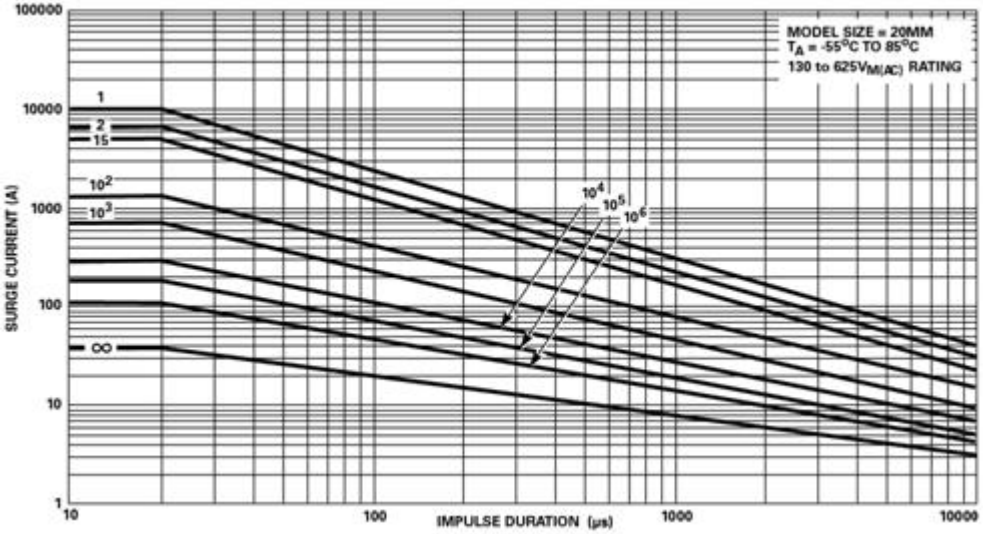

MOV life is dependent on the surges it suppresses

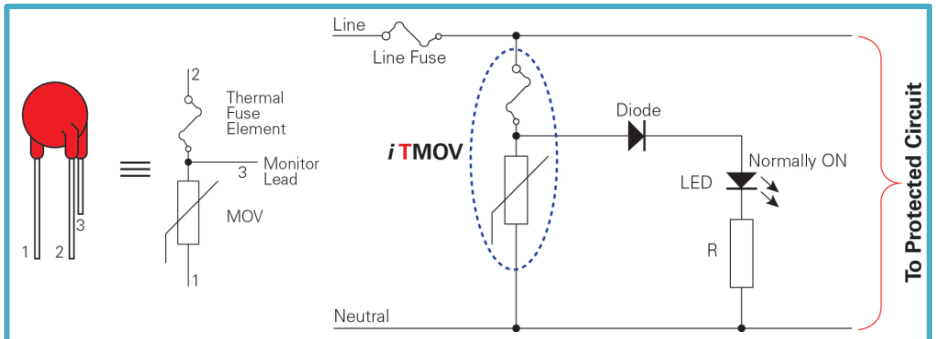

- **TMOV** has integrated thermal fuse
- Ensures MOV is disconnected from supply when it reaches end of life.
- iTMOV can also give indication

Thermal Protection of Varistors is Needed – Continuous Overvoltage Threat

- Metal Oxide Varistors (MOVs) are commonly used to suppress transients in Surge Protection Modules.
- MOVs can also be subjected **to continuous abnormal overvoltage** conditions rather than short duration transients. Continuous abnormal overvoltage faults are usually caused by **poor power grid quality** or **loss of neutral-to-ground connection in power transformer wiring.** The abnormal conditions may last for minutes, even hours.
- If an MOV is subjected to a sustained abnormal overvoltage, the MOV may go into thermal runaway, resulting in **overheating, smoke, and potentially fire**. In many cases, it requires surge protection module makers to include a **thermal disconnect** for an MOV. That thermal disconnect has traditionally been a thermal fuse or Thermal Cut-Off (TCO) device. It disconnects the MOV from the power line when **over-temperature** is detected.

Abnormal Over Voltage!!!

Neutral Missing: Loss of Neutral-Ground connection can occur, common reasons being:

- Wrong equipment like Connector failure or transformer malfunction
- Human Error: improper installations or connectors used, accidental line contacts
- Natural reasons like rain, thunderstorms etc.

– **Loss of Secondary Neutral.** A broken neutral shifts its potential away and may cause a 1.73× (√3) over-voltage at Line-to-Neutral in the worst case.

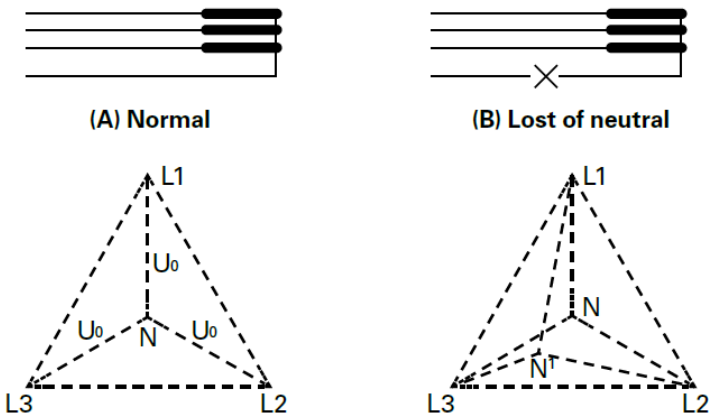

• This can result in sustained over-voltage which can affect the SPD & driver, MOV's can fail and cause smoke, out gassing and eventually fire. UL1449 & IEC61643-11 specifies that the SPD should have protection against this for which thermally protected MOVs are used.

• Poor installation & infrastructure result in frequent problems, so driver & SPD should withstand continuous over voltage.

MOV End-of-Life Failures Are Really HOT!

- **Test Set-up:**
  - 150V MOV with 240V/10A fault, AC coupled – simulating EOL condition
  - Side-by-side testing 150V TMOV (thermally protected MOV)

- **Video:**
  - Competitor MOV (Left) ; Littelfuse MOV (Middle) ; Littelfuse TMOV (Right)

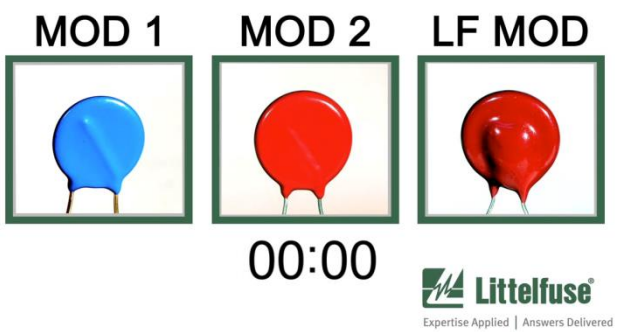

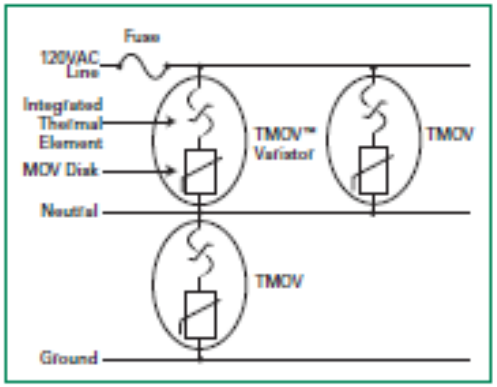

Recognized to UL1449 3rd Edition

Coordination Recommendations Between MOVs in SPD and in LED Driver

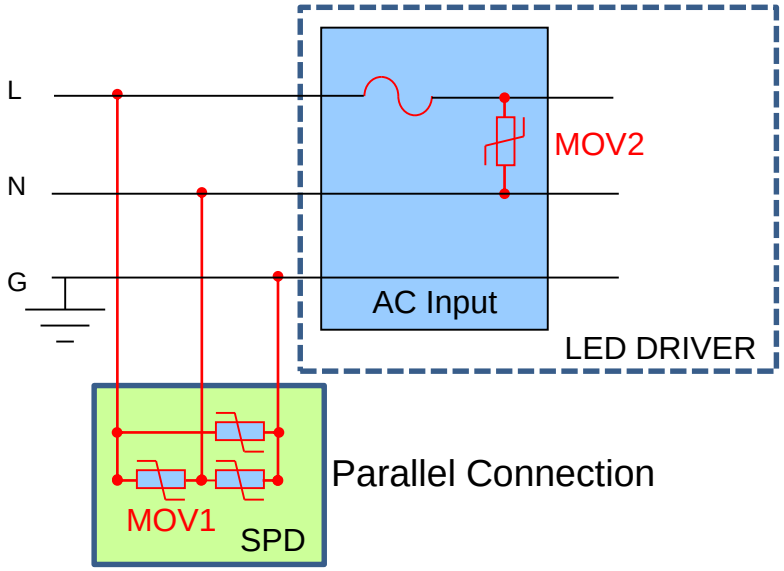

Parallel Connection

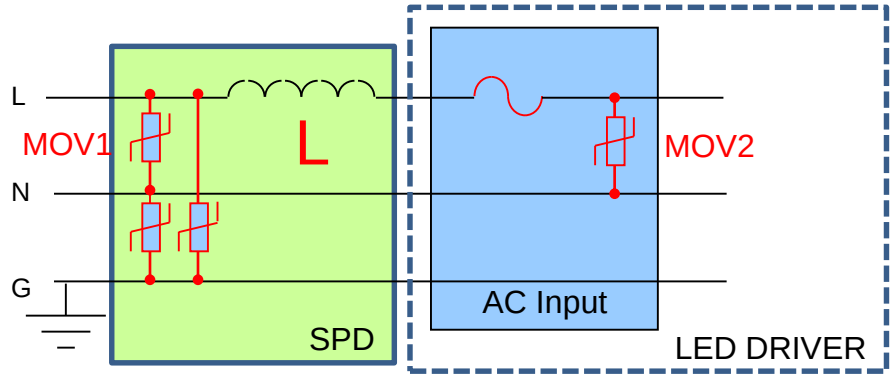

Series Connection

The coordination between the MOVs used in the surge protection module and in the LED driver is also of important consideration. These MOVs must be coordinated such that the larger disc MOVs residing in the surge protection module should clamp before the smaller MOV used in the LED driver power supply. If the driver MOV voltage rating is lower, it will take the brunt of the transient since it will likely turn on first. That could result in a catastrophic event. Impedance between the primary SPD and the driver, perhaps a few uHs will help in ensuring proper coordination.

Engineers must account for enough line impedance to direct a majority of the surge current through the primary MOV (MOV1 in the diagram above) and limit the surge current through the secondary MOV (MOV2 in the figure above) to a level within its surge rating.

1. MOV1 and MOV2 need to be coordinated so that most of surge current/energy flows through MOV1.
2. V_M (Maximum Continuous Operating Voltage) Select MOVs with $V_{M(MOV1)} \leqq V_{M(MOV2)}$
3. V_C (Maximum Clamping Voltage) Select MOVs with $V_{C(MOV1)} \leqq V_{C(MOV2)}$
4. Inductance L may be added in series connection SPD. Increasing inductance L will result in better coordination as MOV1 absorbing higher surge energy. $V_{MOV1} = V_{MOV2} + L * di/dt$

Residual Surge Energy Passing Through Surge Protection Module

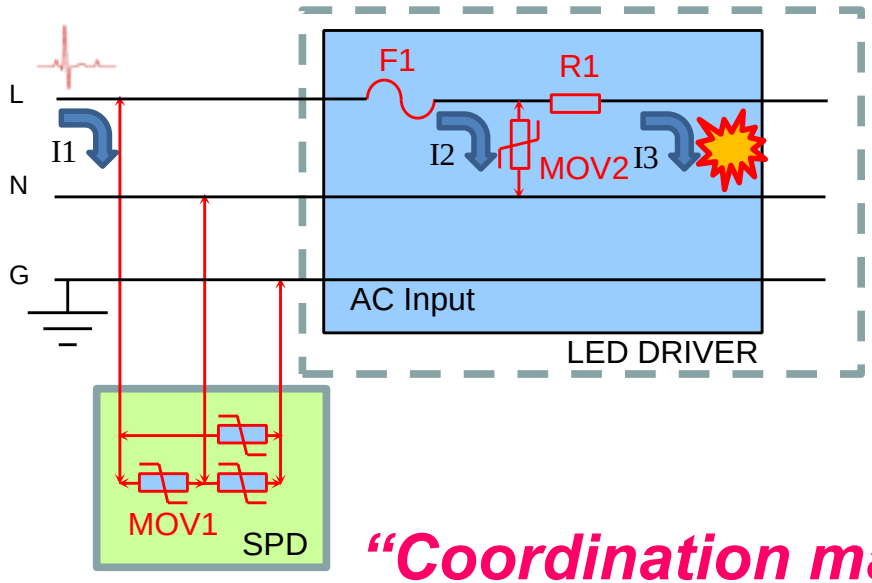

- Surge protection module absorbs most of surge energy; however, there is still residual energy going into LED driver and causing damage to components inside.
- To minimize the damage, the LED driver should coordinate with the surge protection module so that less energy enters the LED driver.

"Coordination makes better protection and less damage"

- **Residual Voltage**
  - Determined by MOV1; thus, fast-response-time and low-clamping-voltage varistor is preferred
- **Residual Current**
  - MOV2 is suggested as higher clamping voltage than MOV1 to maximize I1 and minimize I2 so that fuse F1 is not damaged by residual current
  - R1, the equivalent resistance of primary circuitry including NTC, EMI filter, rectifier, PFC, transformer, transistor, etc., could be adjusted higher if necessary to minimize I3 and component damage in primary circuitry.

Key Applications for Surge Protection in Outdoor Lighting

Roadway Lighting

Parking Garage Lighting

Wash wall Lighting

Traffic Lighting

Flood Lighting

Digital Signage

Street Lighting

Tunnel Lighting

Questions?