The Premier Global Event in Applied Power Electronics™

APEC® 2016

LONG BEACH California

March 20-24, 2016

LONG BEACH CONVENTION & ENTERTAINMENT CENTER

Embedded Power from POL to Off-Line Applications

Fred C. Lee

Center for Power Electronics Systems

The Bradley Department of Electrical and Computer Engineering

Desk Top Power Supplies

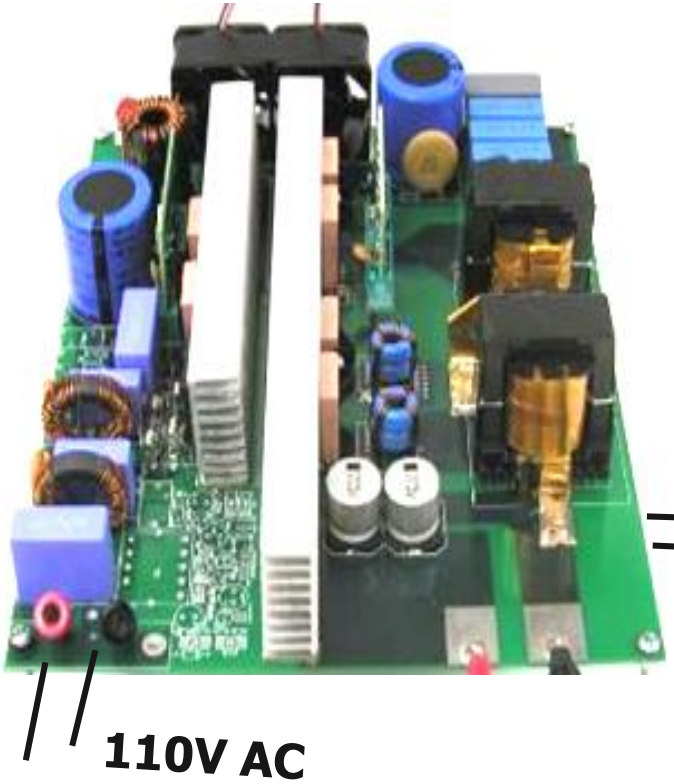

12V

110V AC

External Power

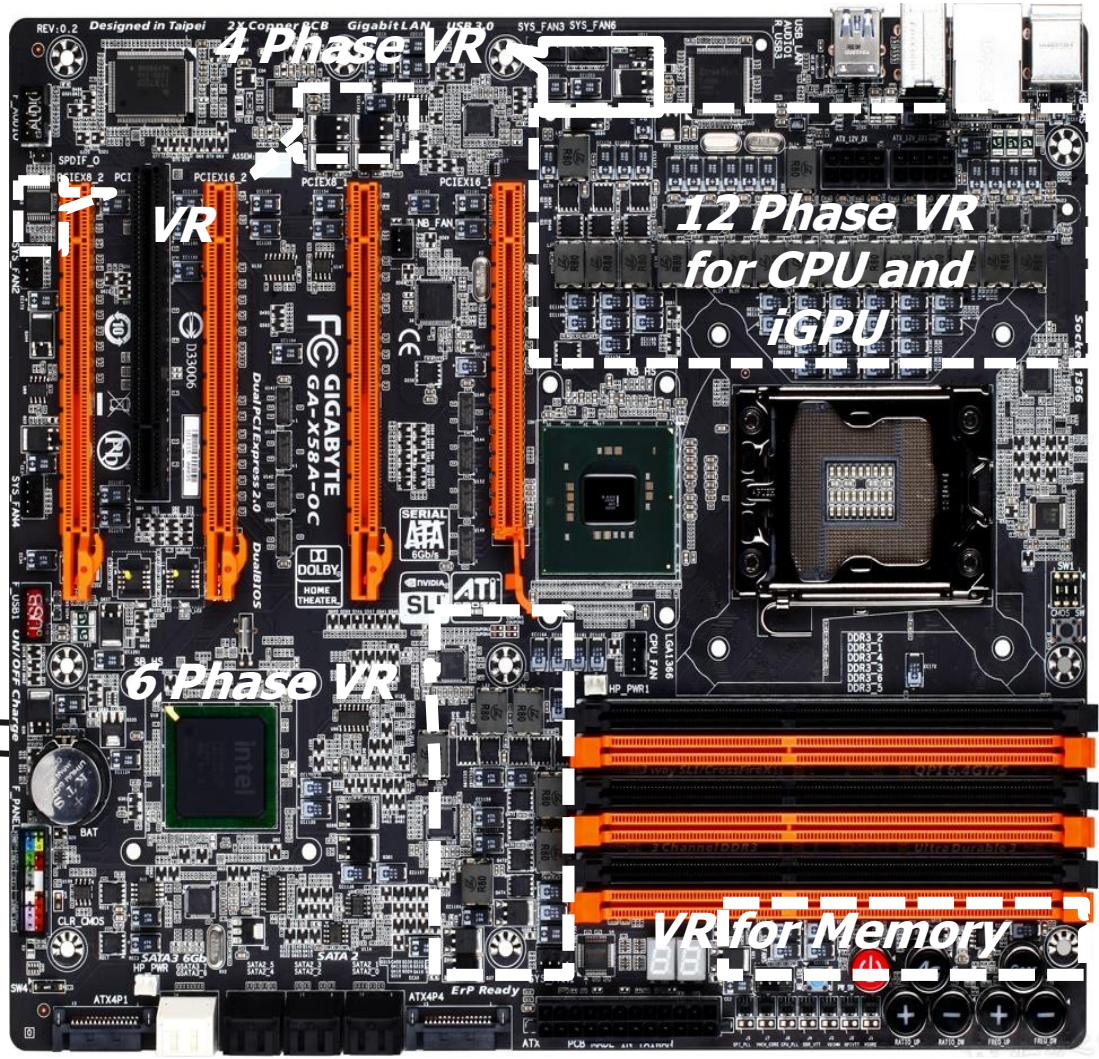

Embedded Power

Embedded VR
Device & Packaging

Discrete

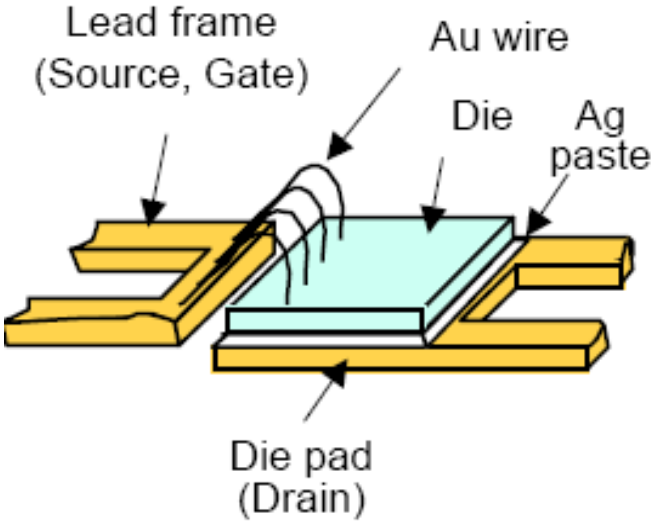

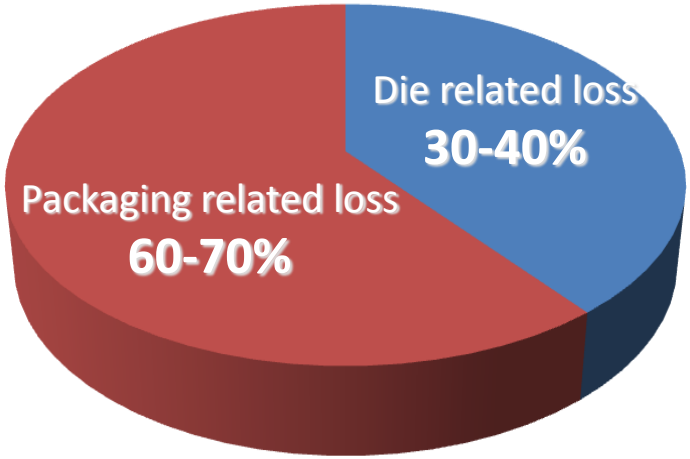

Dr.MOS

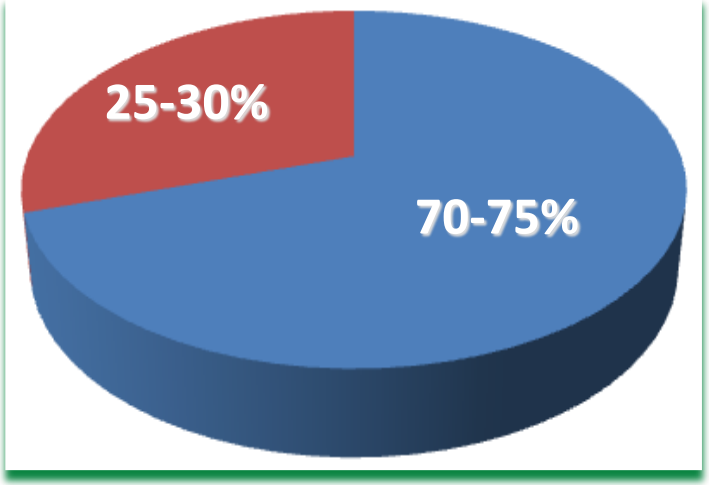

VR for Desktop

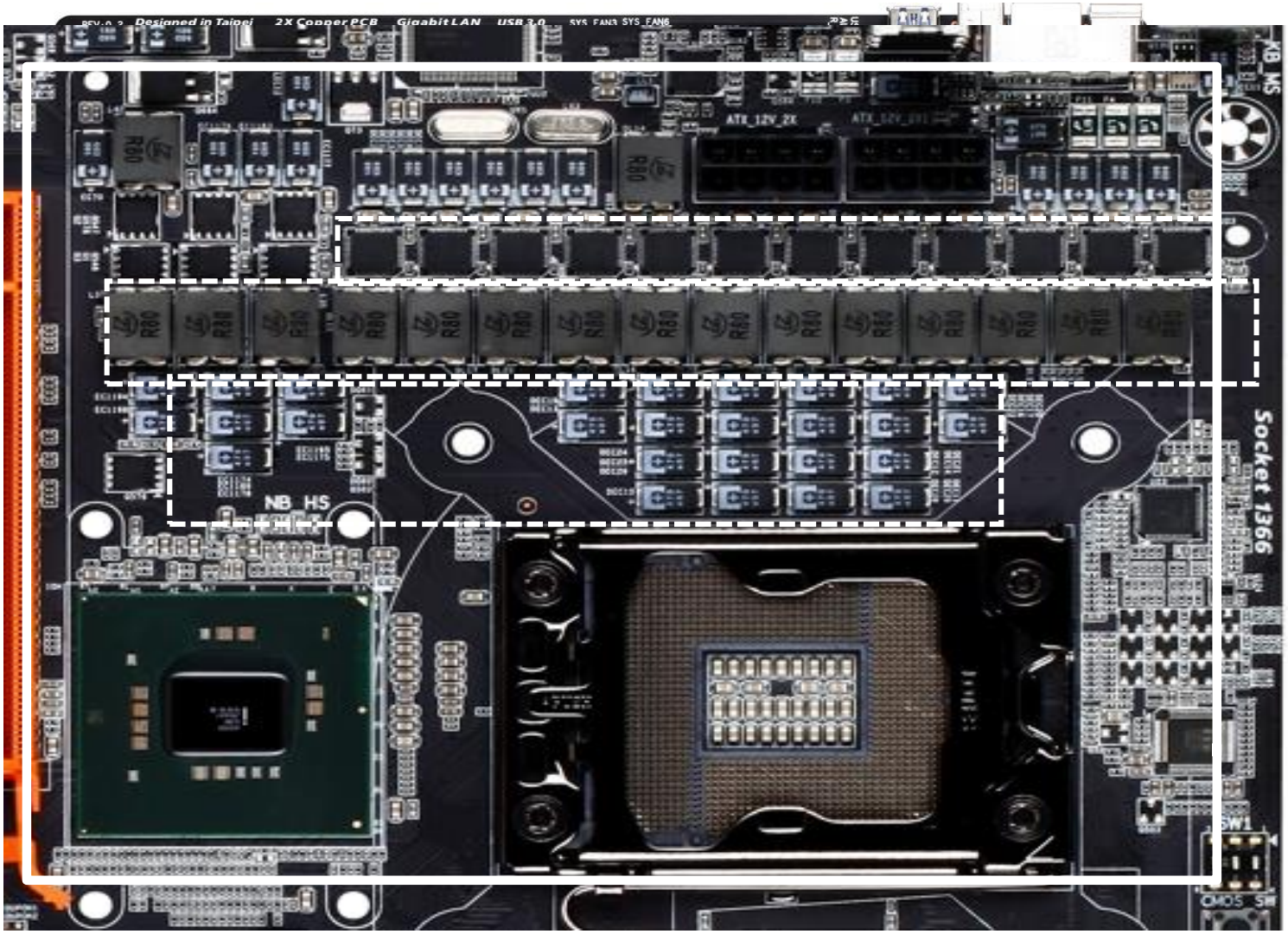

Dr. Moss

Inductors

Capacitors

Voltage Regulator

1MHz

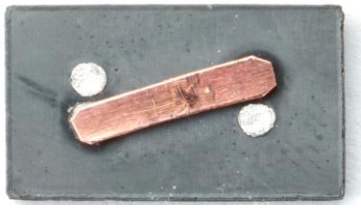

2 MHz

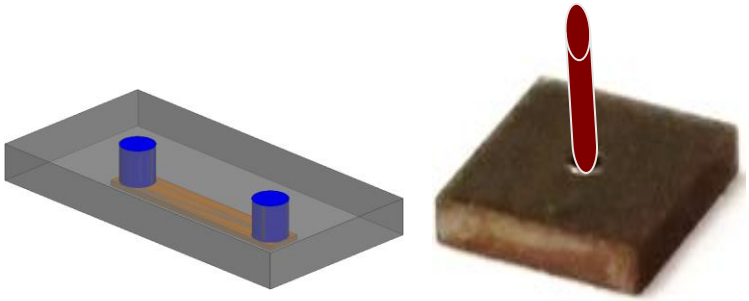

>5 MHz

3-D Point-of-Load

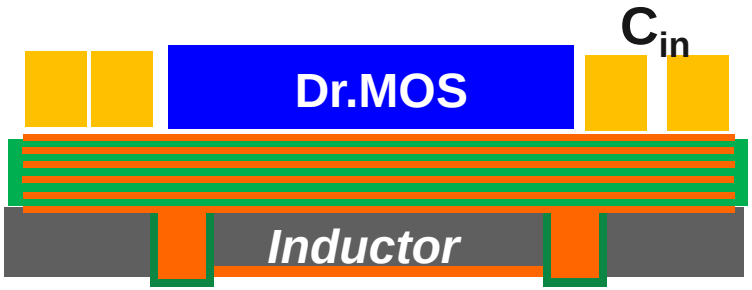

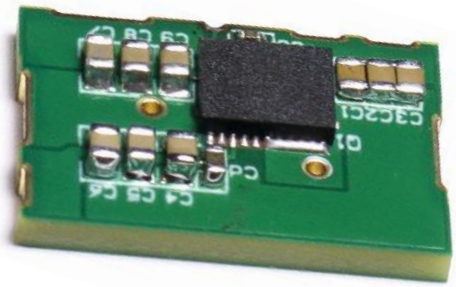

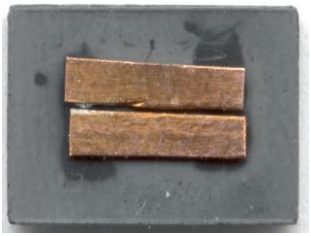

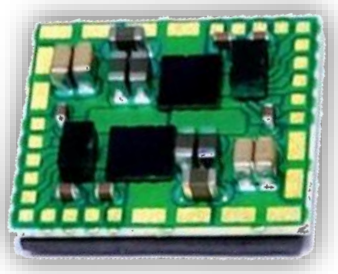

20A, 5MHz
1100W/in3

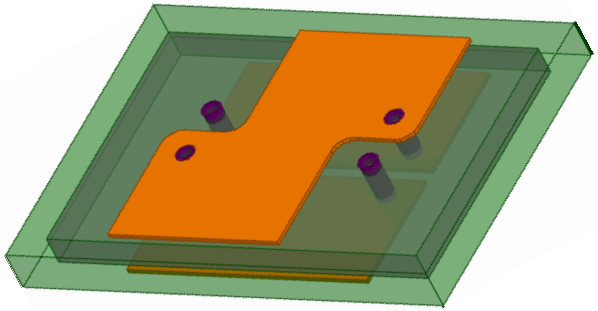

Inductor embedded into PCB

More Integration

1 Phase

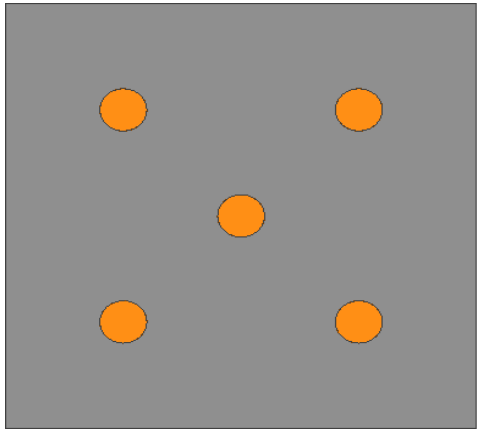

5 Phase

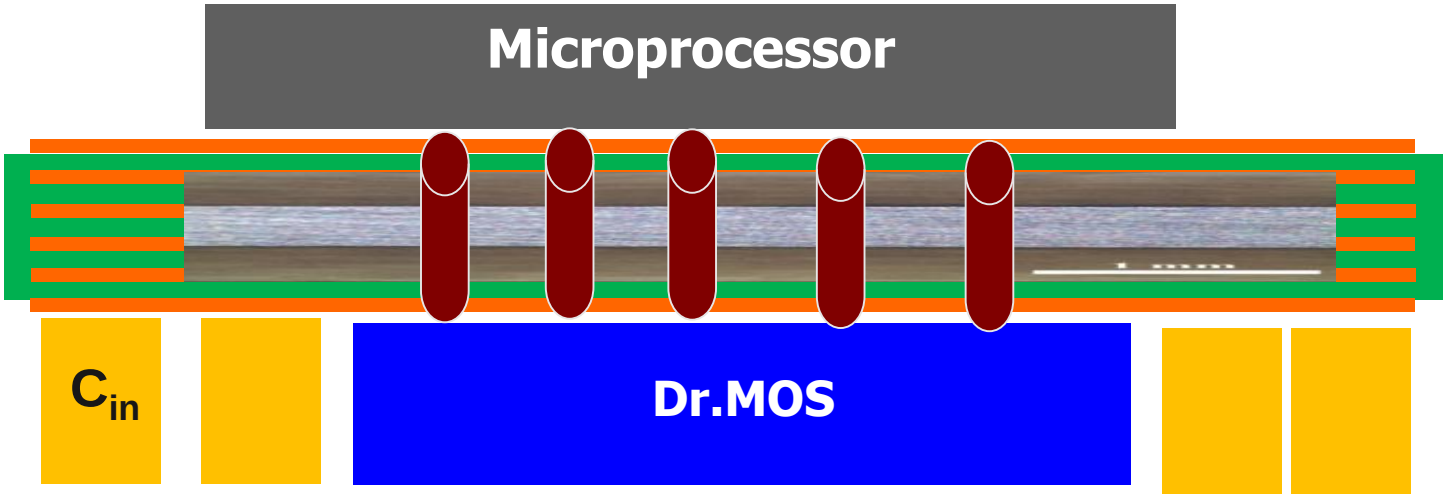

iVR

Non-uniform Flux Distribution

DC Flux

I_{DC}=4A 10A 15A 20A

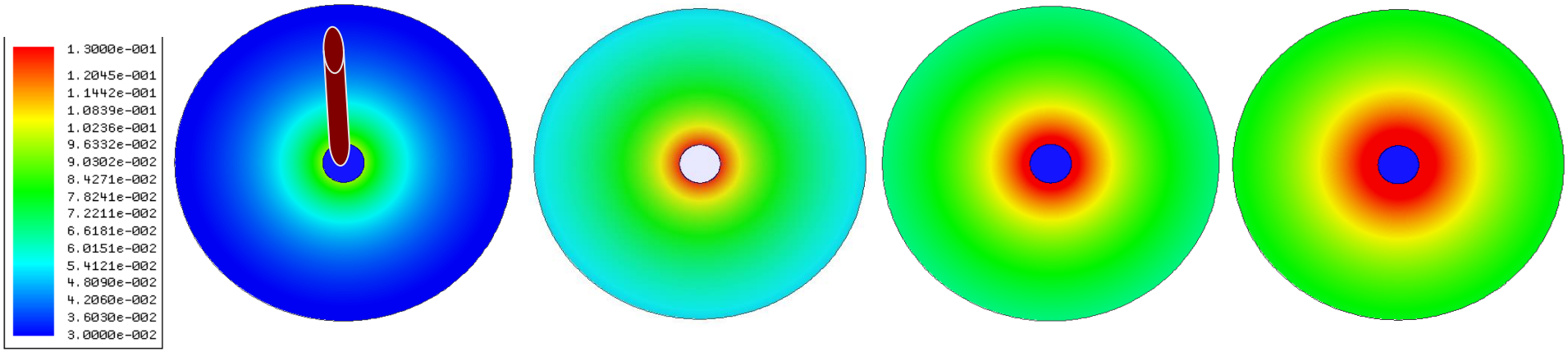

AC Flux (i_{AC}=50% I_{DC})

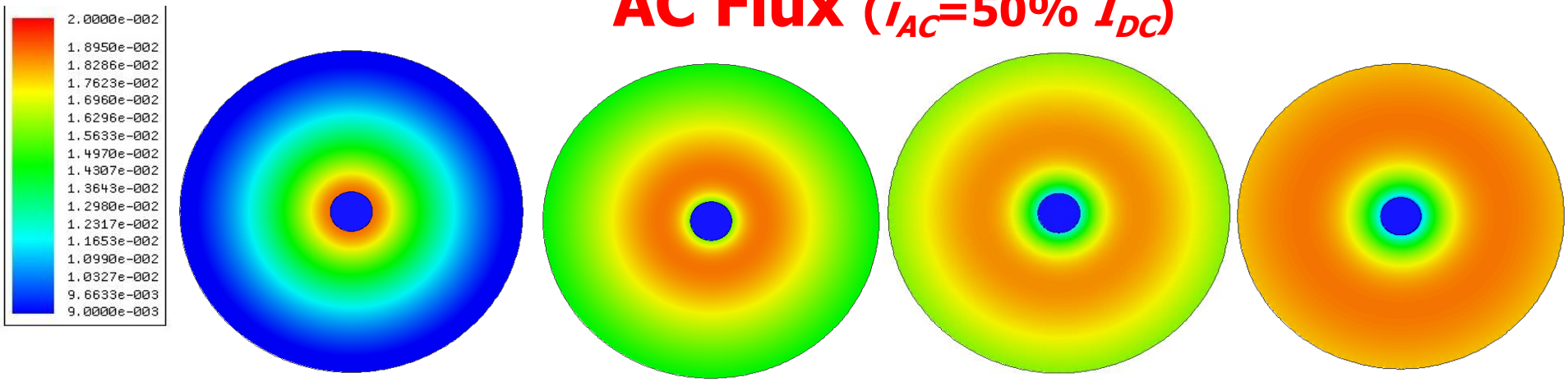

Magnetic Property
of NEC's Materials

Heat Treatment

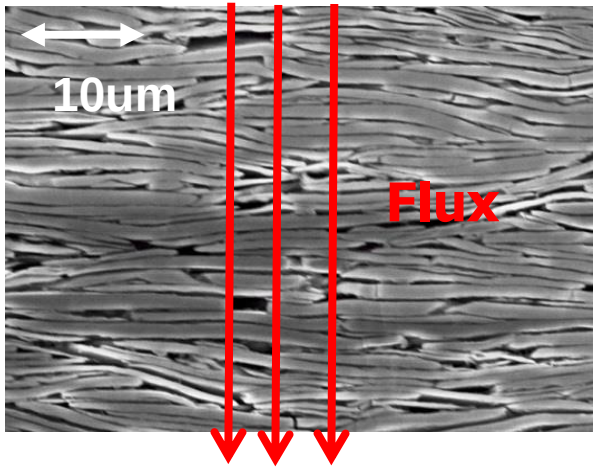

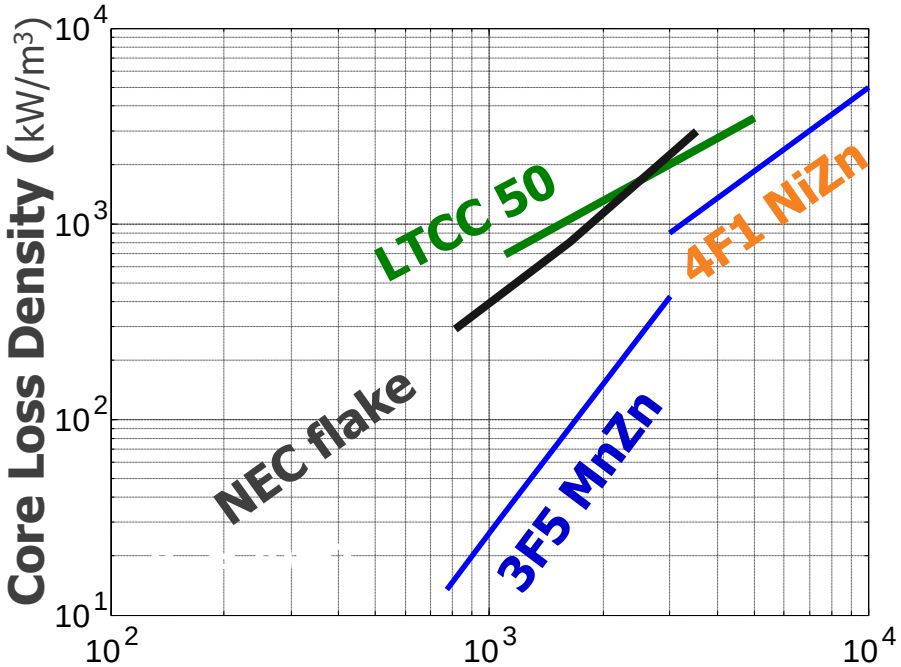

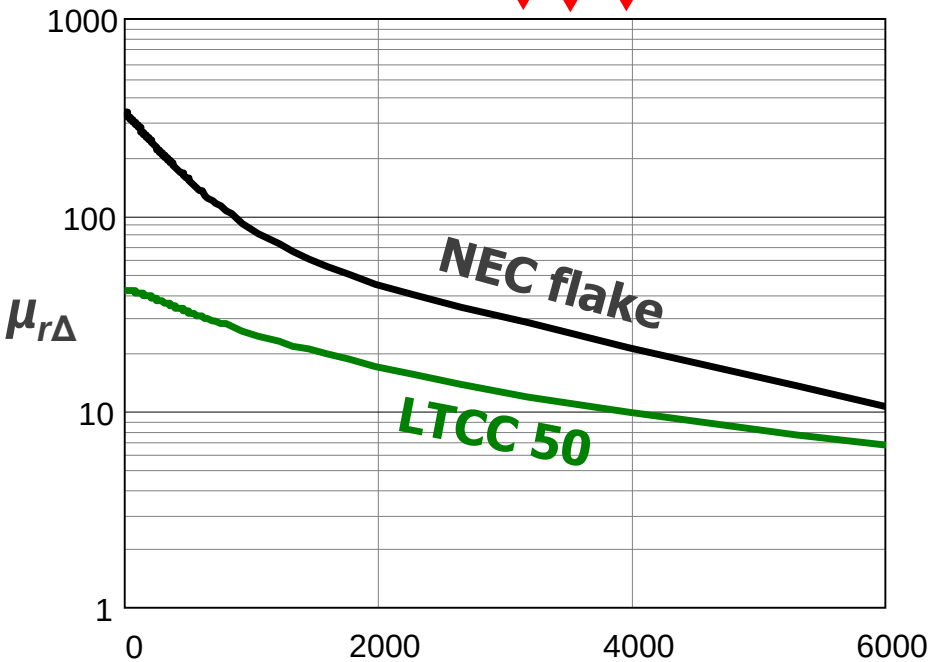

DC Flux Cancellation

Inverse Coupled

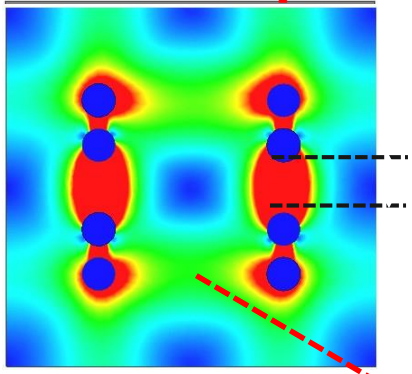

$d = 1.8\ mm$

$|\alpha| = 0.5$

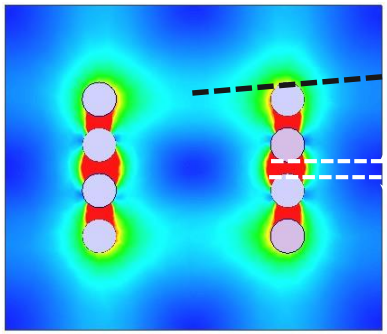

$d = 0.4\ mm$

$|\alpha| = 0.8$

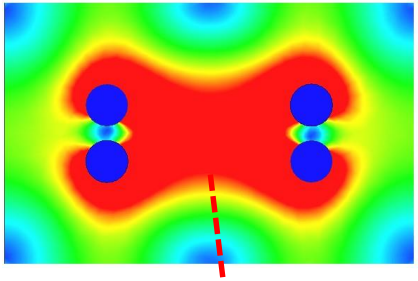

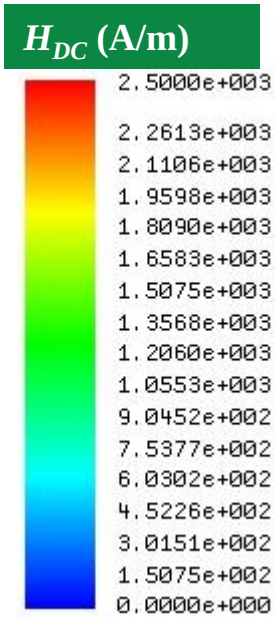

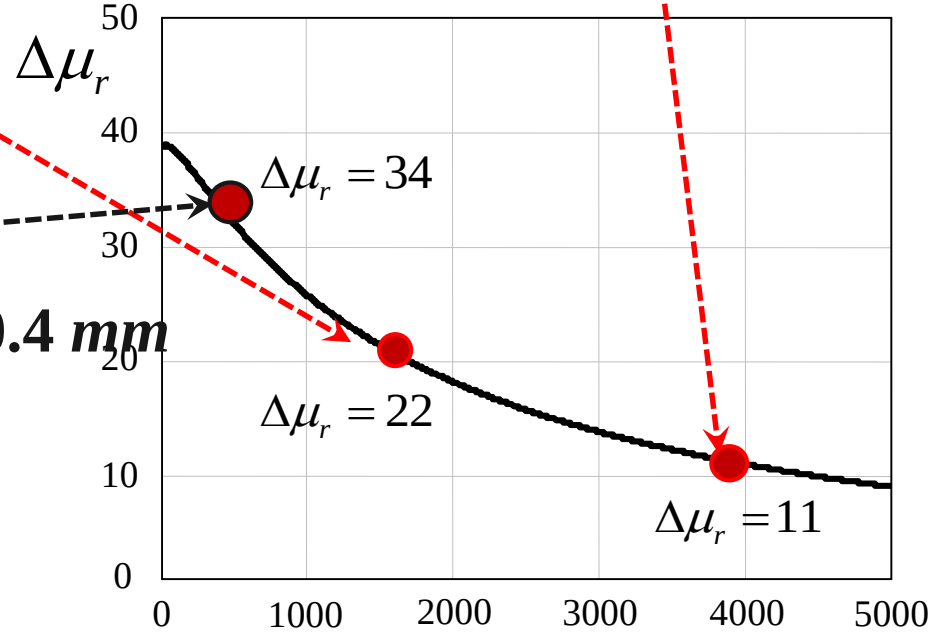

- ❑ Cancelling DC flux.
- ❑ Increasing permeability.
- ❑ Reducing core volume.

3D Integrated POL

5 MHz with IR GaN

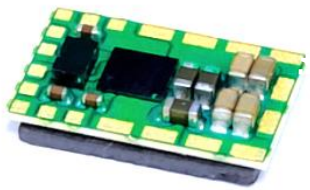

1 phase

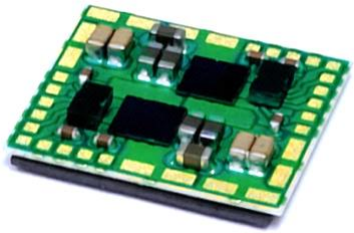

2 phase

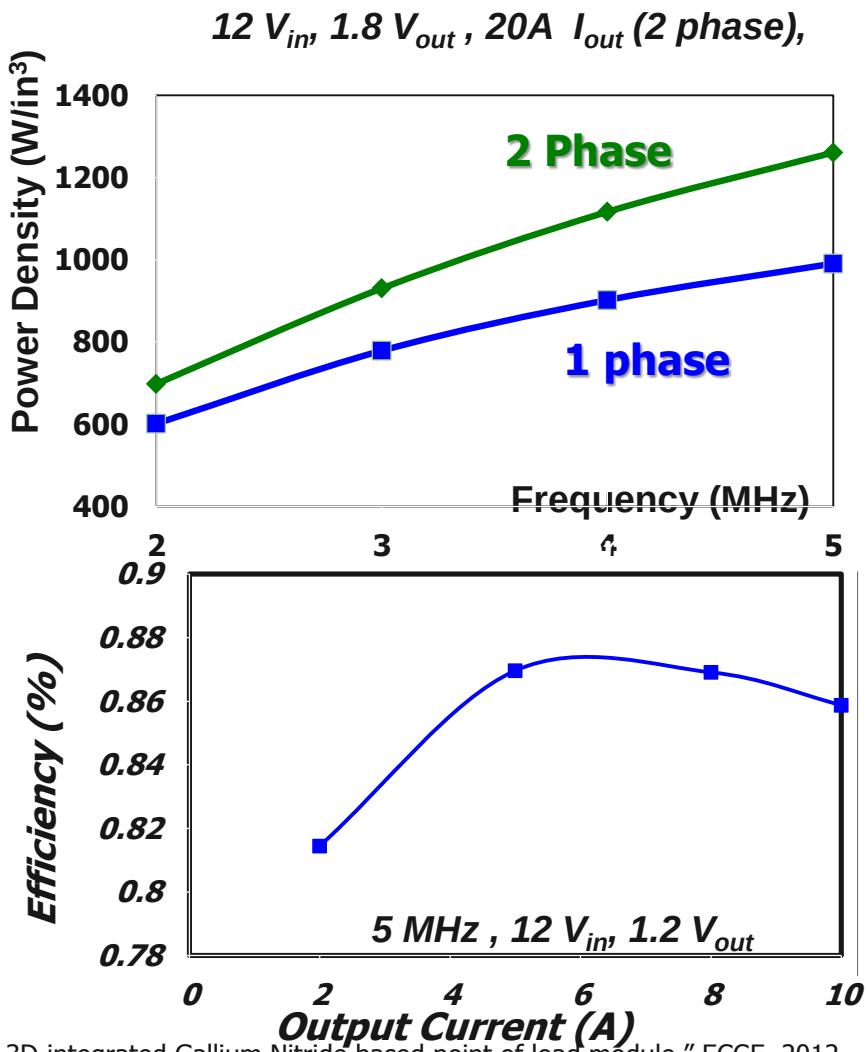

Ref. : S. Ji, D. Reusch, and F. C. Lee, "High frequency high power density 3D integrated Gallium Nitride based point of load module," ECCE ,2012.
Ref. : Y. Su, Q. Li, and F. C. Lee, "Design and Evaluation of High Frequency LTCC Inductor Substrate for 3-Dimension Integrated DC/DC Converter ," *IEEE Trans. Power Electron.*, 2012.

LLC Converter

1KW, 400V/12V DC/DC

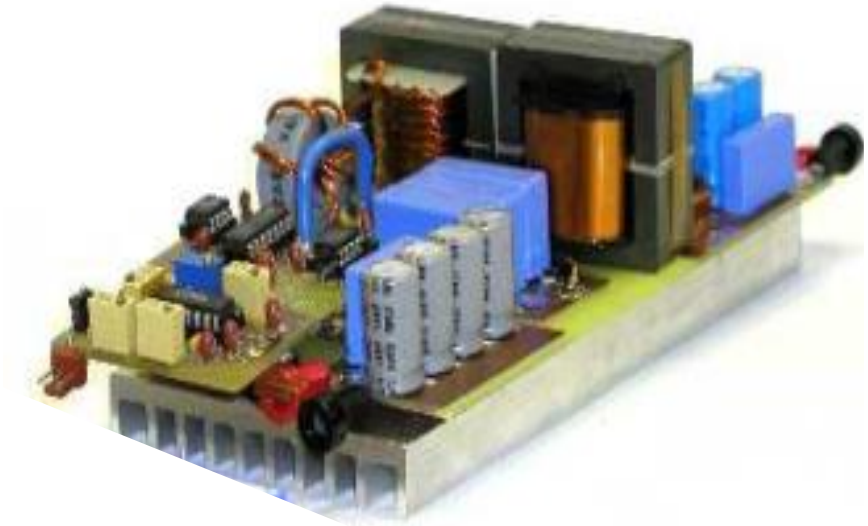

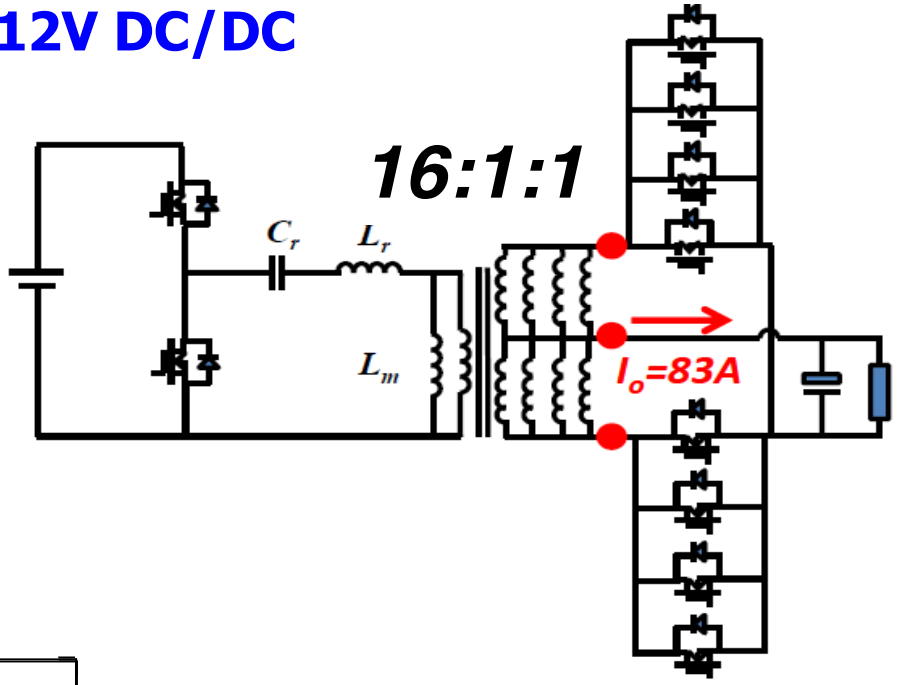

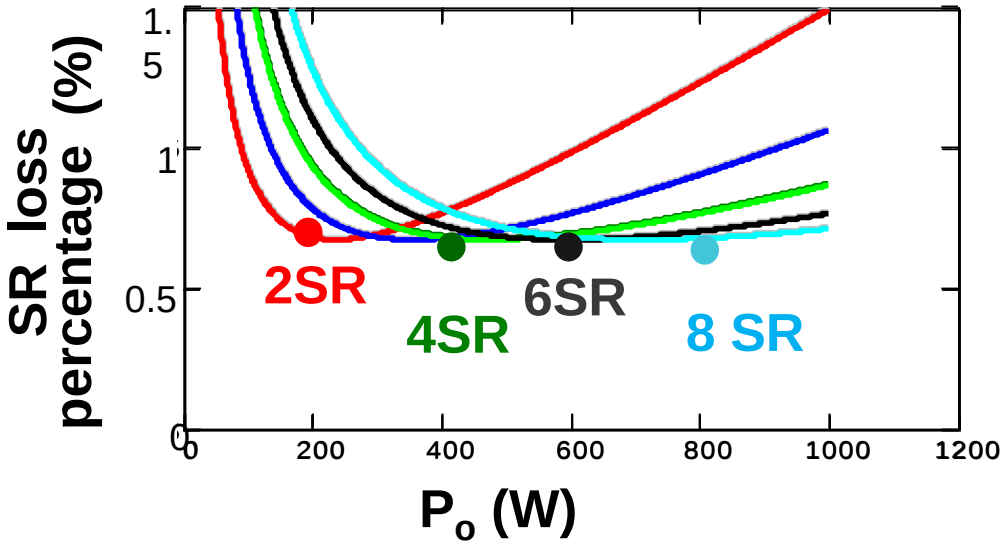

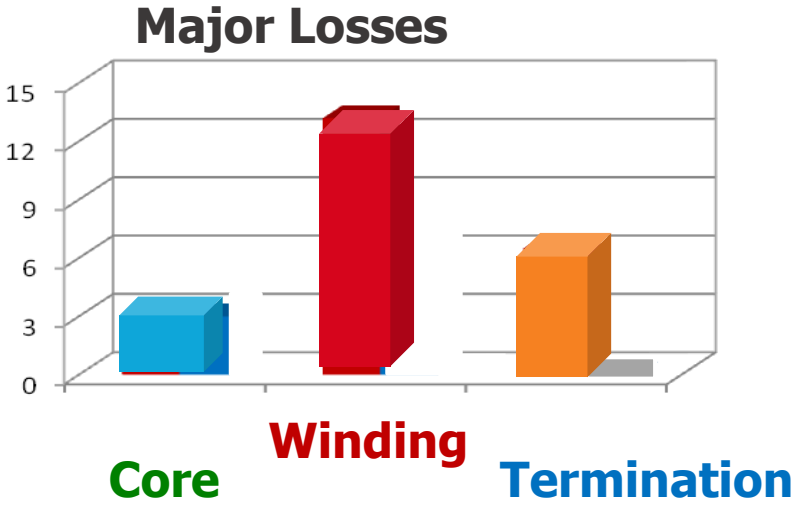

Reducing Losses

16:1:1 **12V/83A**

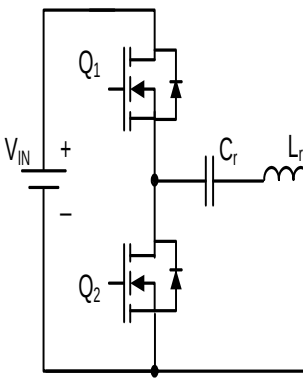

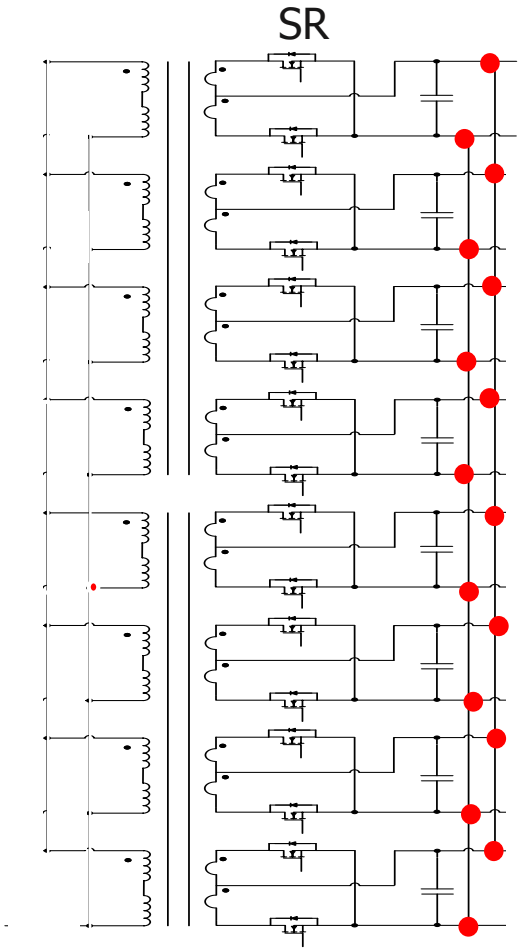

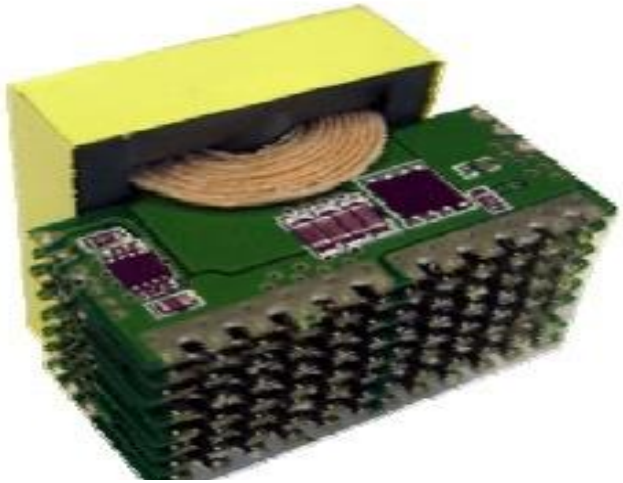

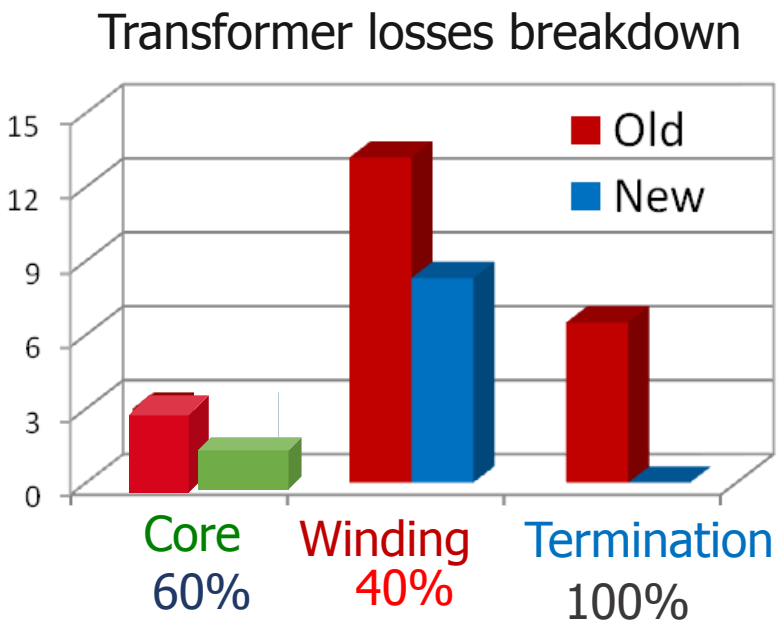

The Alternative

8 Transformers

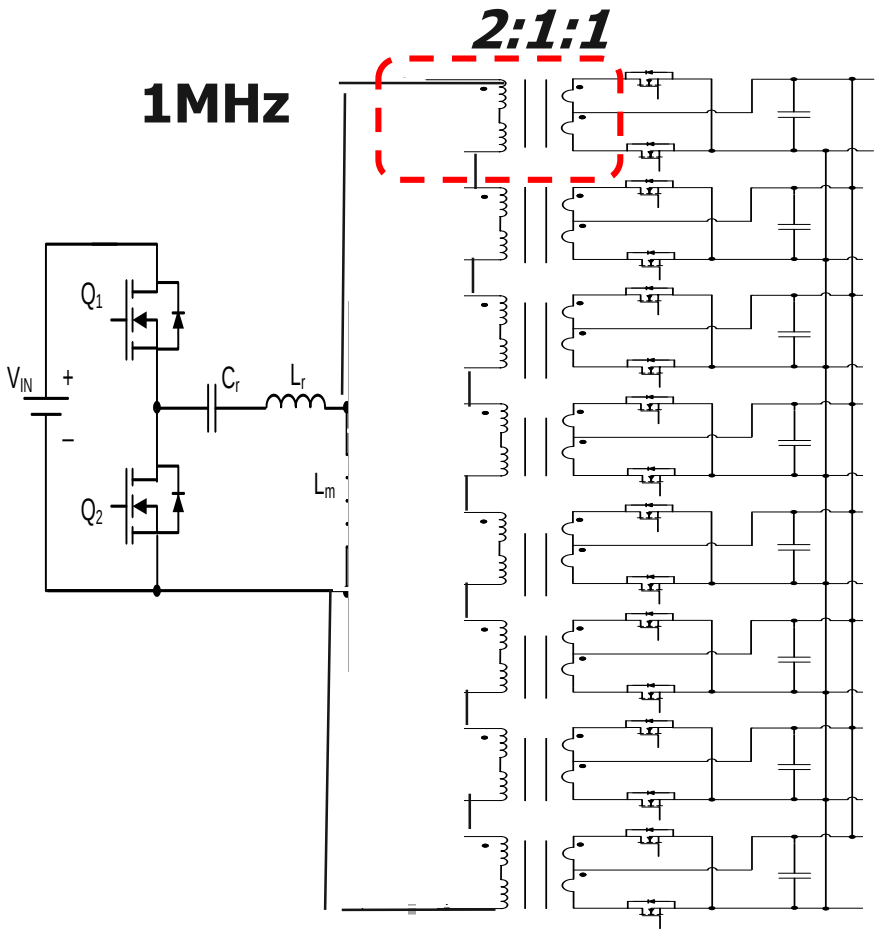

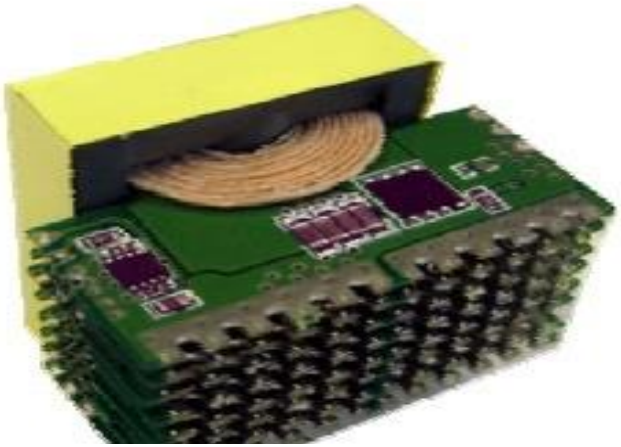

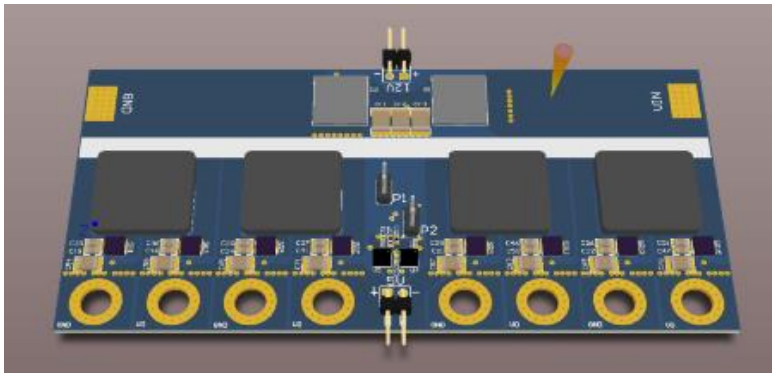

Primary in series

Magnetic Integration

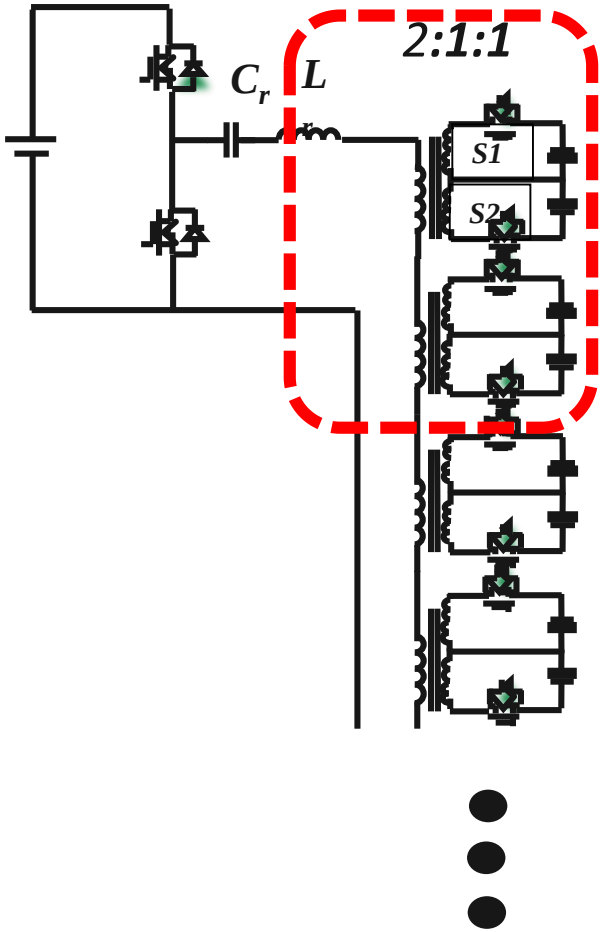

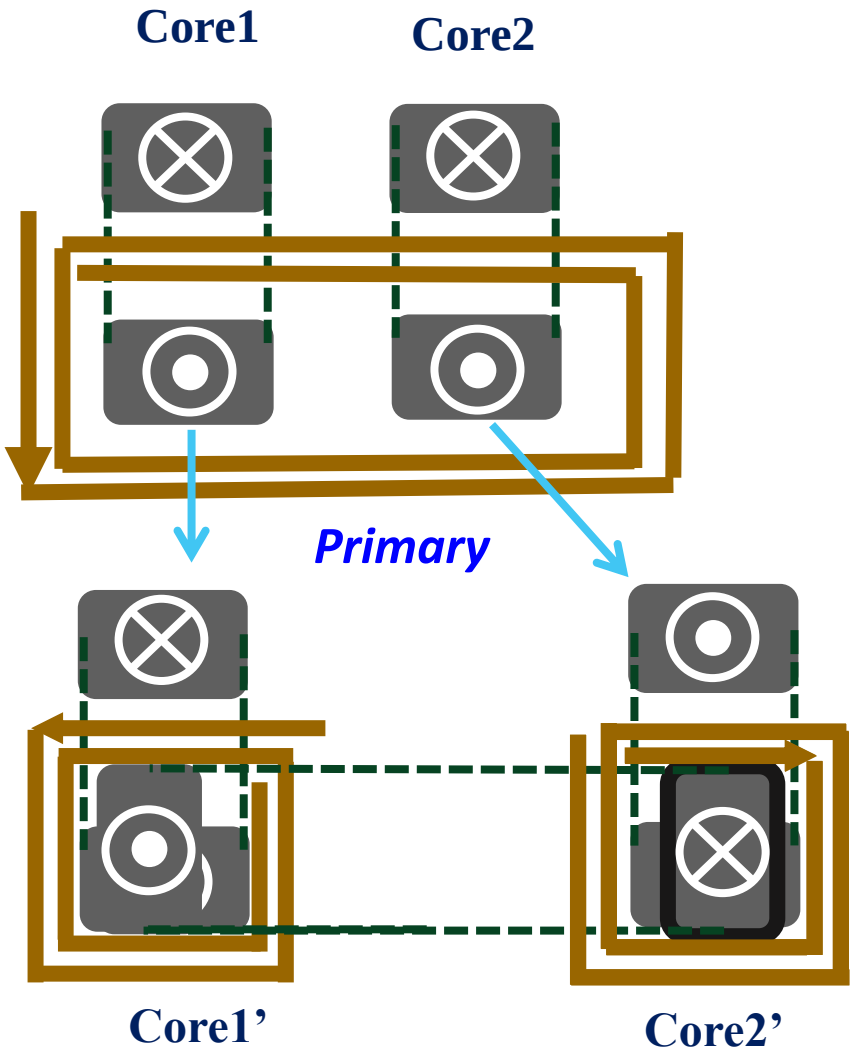

Primary in series
Secondary in parallel

2 cores become 1core
Winding length is reduced

Two Transformers
in one Core

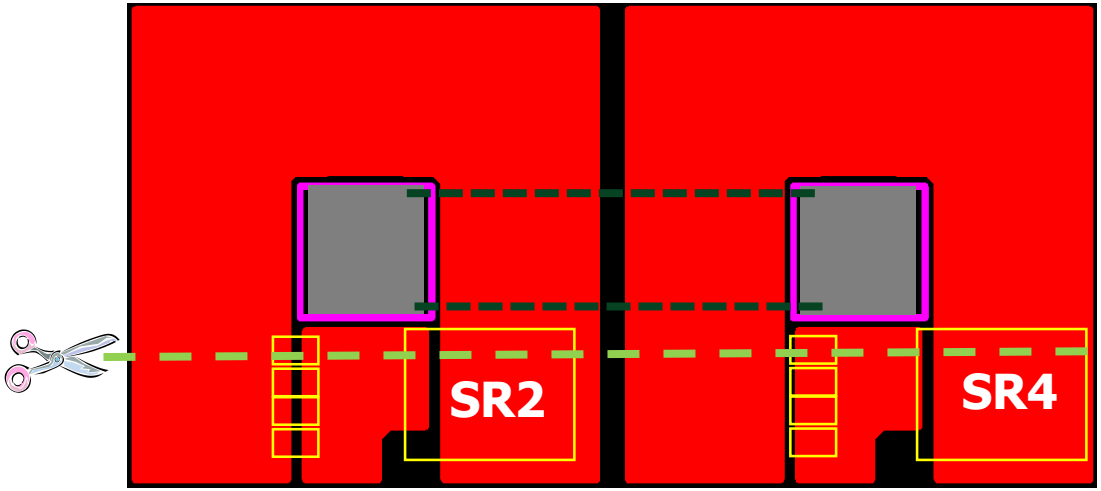

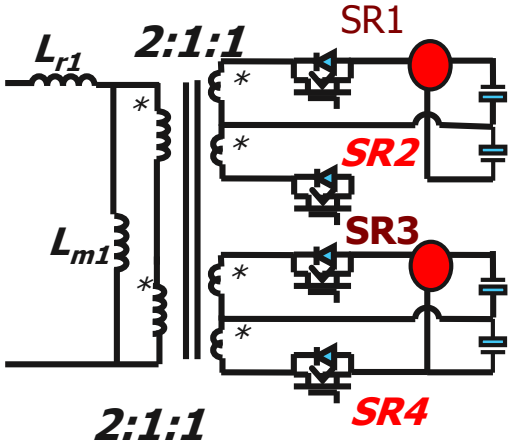

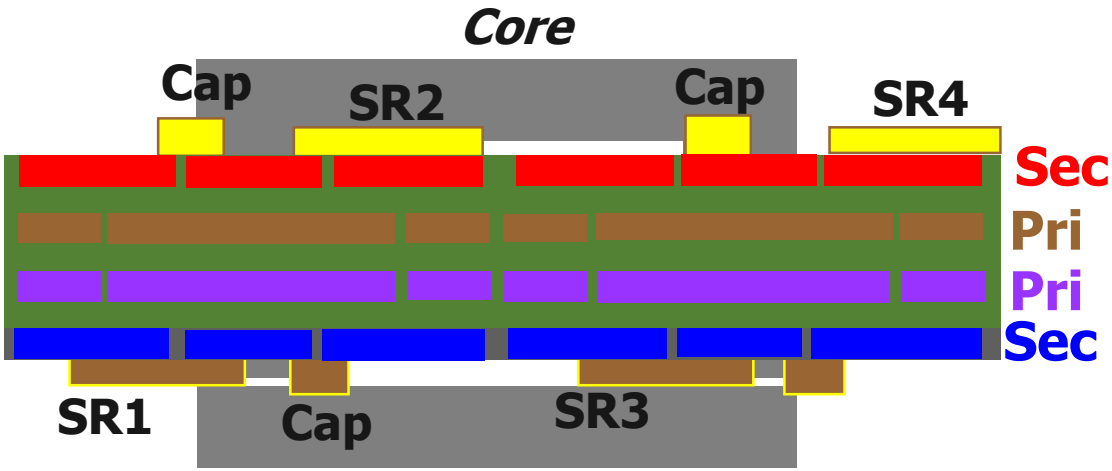

- SR are mounted on the Sec winding
- No termination losses
- 4 layers PCB

Shielding
for CM Noise Reduction

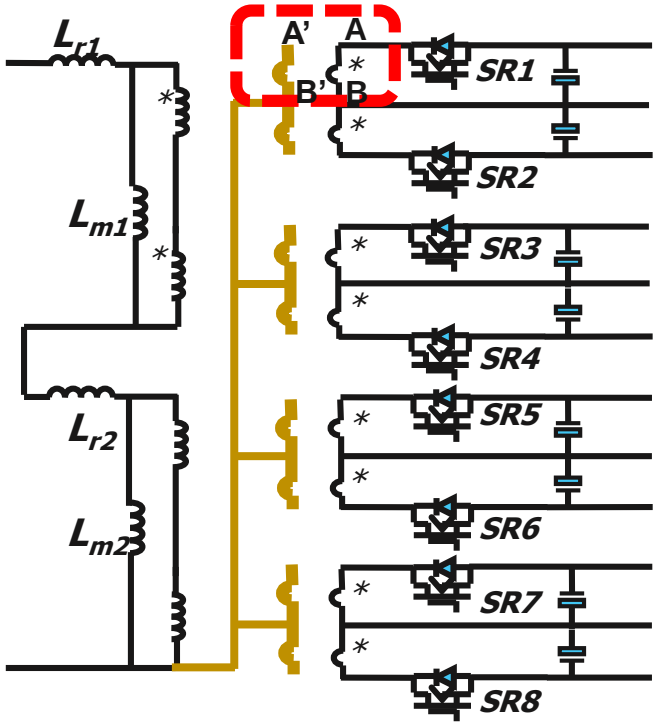

US patent

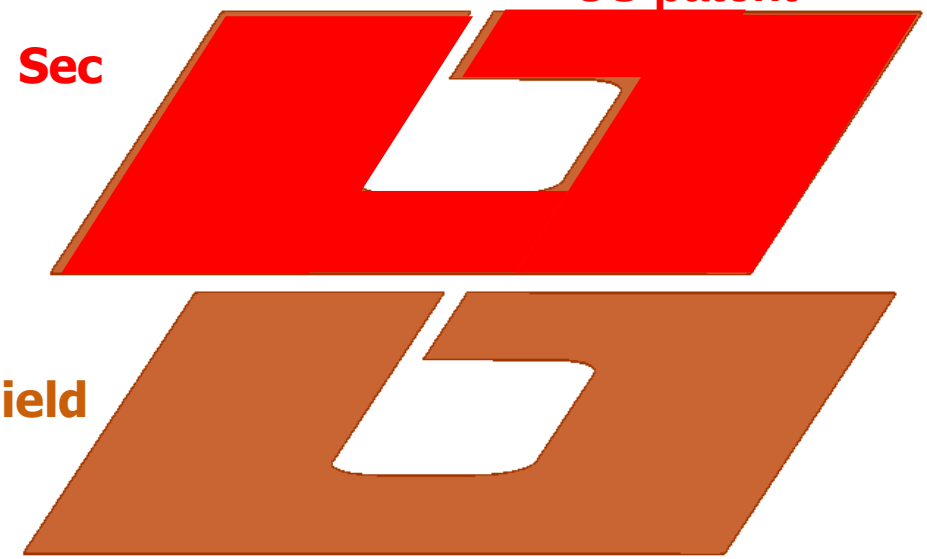

EMI Shielding

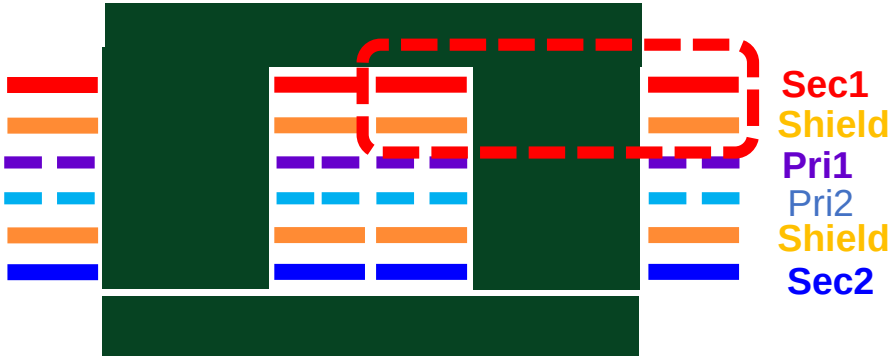

6 layers PCB

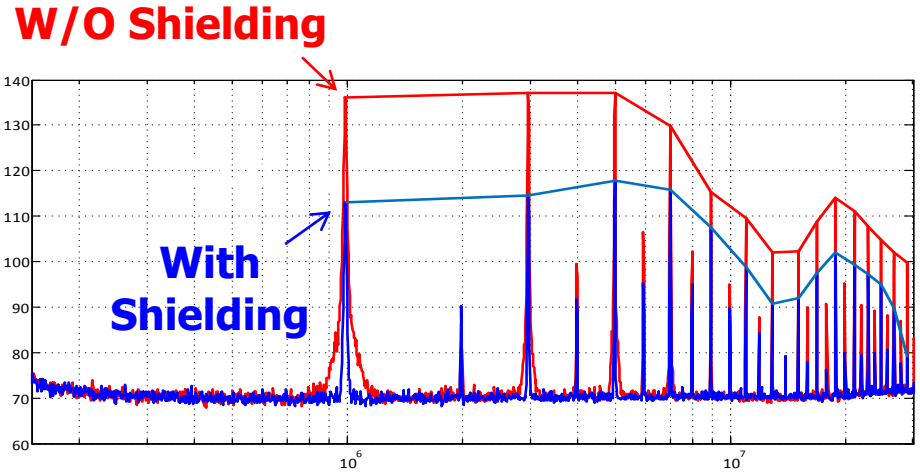

Matrix Transformer

4 cores/8 outputs

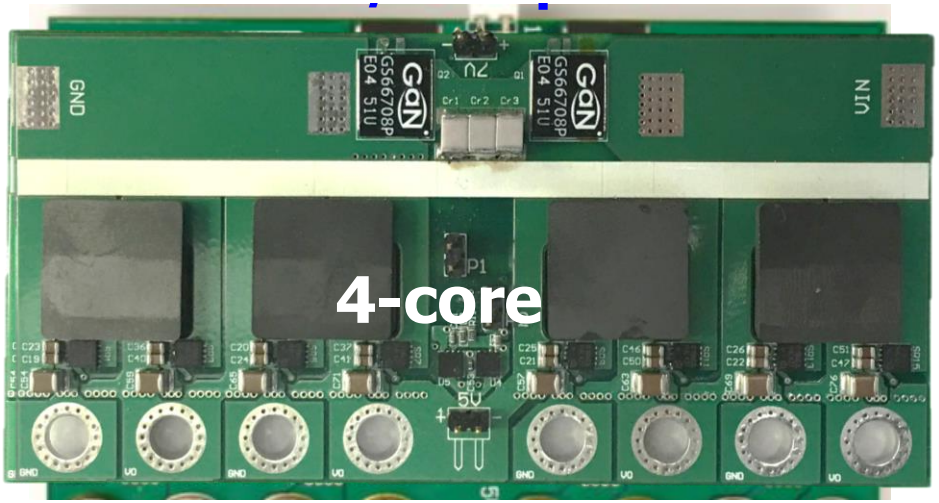

1MHz **700W/in³**

4 layer PCB

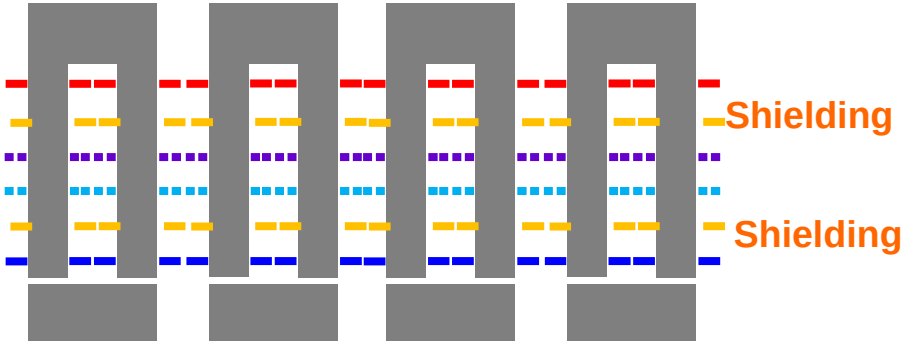

6-layer board

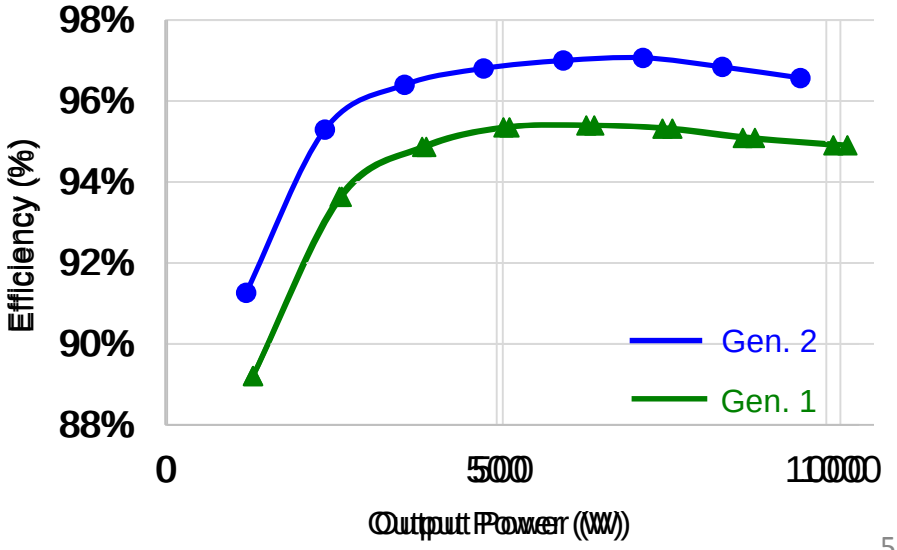

DC Data Center

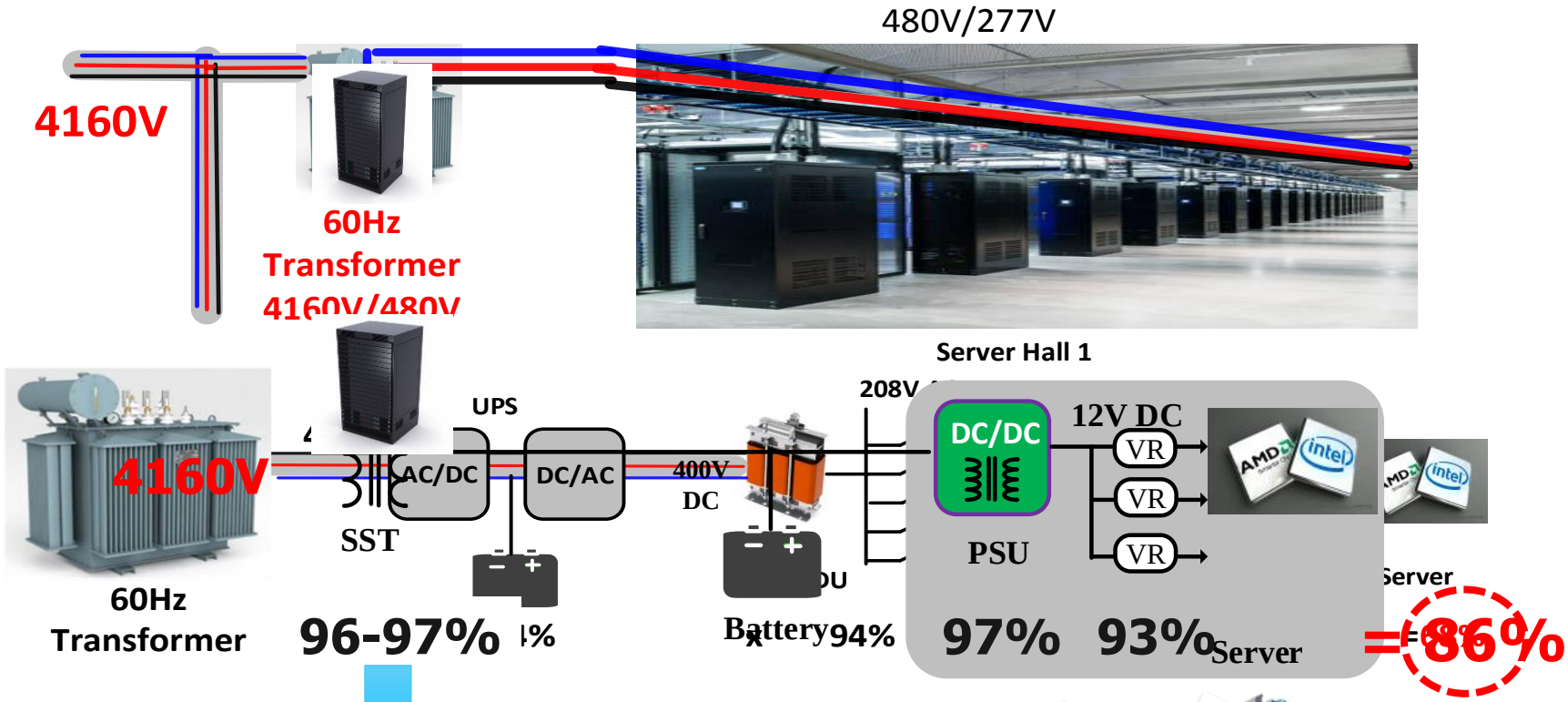

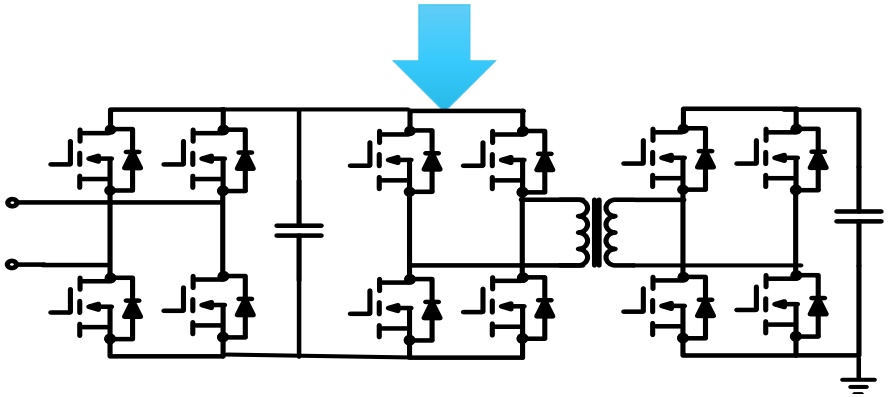

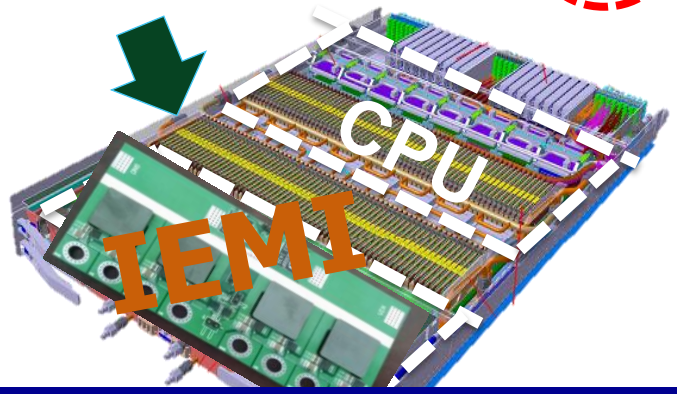

18% energy saving → 54 nuclear power plants (each @ 1GW)

Automated Manufacturing

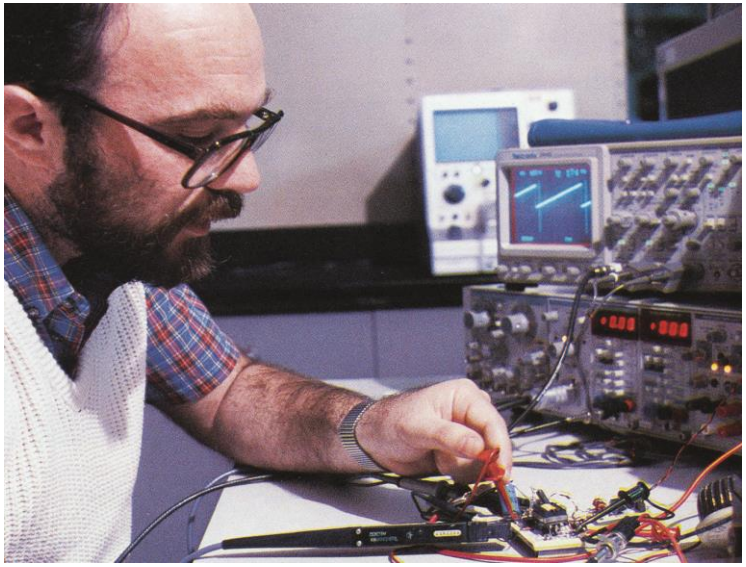

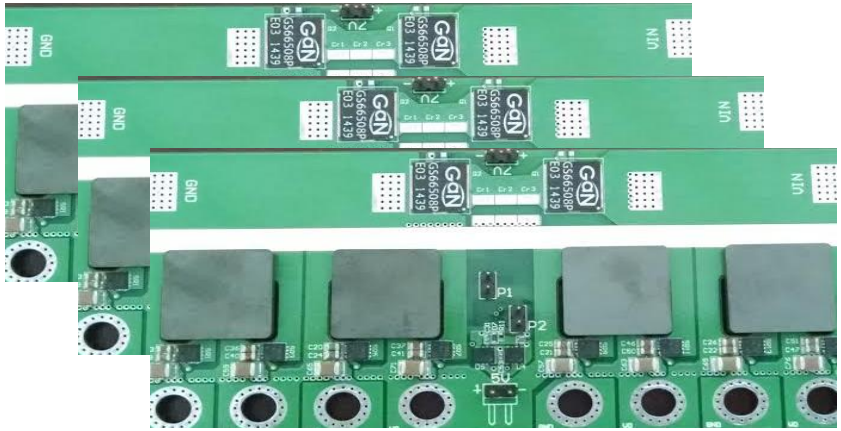

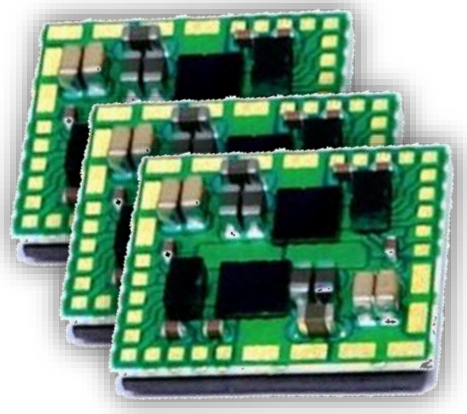

Thanks !