GaN Offers Advantages to Future HEV

Yifeng Wu
ywu@transphoromusa.com
Transphorm Inc.
115 Castilian Dr.
Goleta, CA 93117, USA

Table of Contents

Key Considerations For HEV

1. Resistance-capacitance figure of merit at high voltages
2. Over-voltage, dV/dt & dI/dt capabilities
3. High temperature tolerance
4. Extended power capability
5. Hard-switched H-bridge simplicity & performance
6. System benefit

GaN Is Inherently a Highly Reliable Material

- GaN is inherently reliable
  - Wurtzite Crystal: high biding energy
- Dislocations in GaN is benign
  - Lasers stable with 100x more dislocation than other semiconductors
- Intrinsic device reliability has been proven in RF applications
- Learn from experience in RF devices
  - Epi quality for high μ & low leakage
  - Passivation guidelines for low trapping
  - Principle of electric field management
  - Basic fabrication process
- Challenges:
  - High voltage epi / device designs & process realization
  - New operation space exceeding traditional package schemes
  - Stringent qualification requirement

GaN Crystal Structure

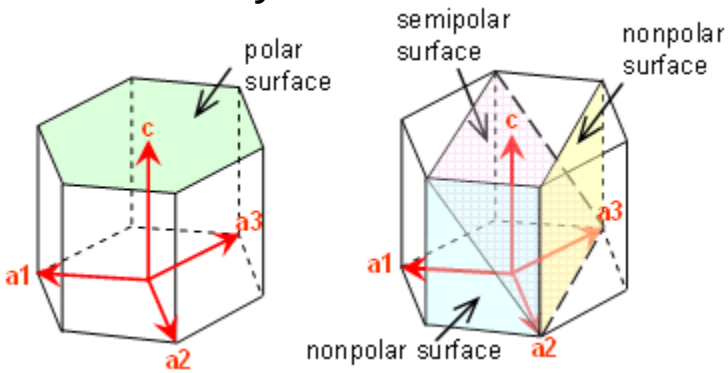

GaN RF Device Reliability

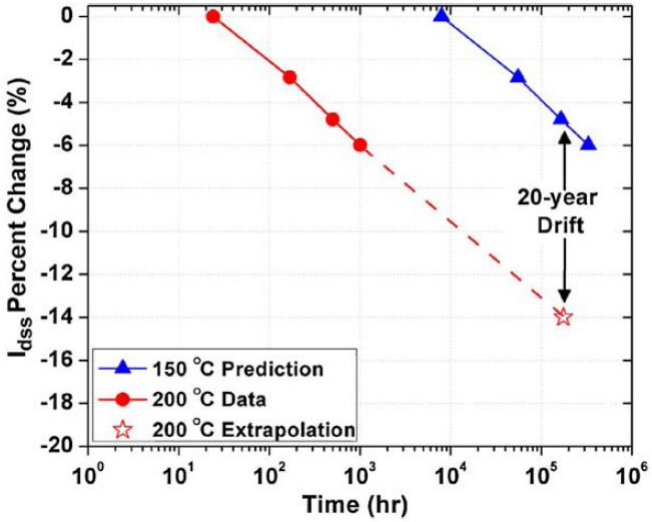

GaN HEMT Spike Tolerance Test at Vdc=600V Using Artificially-High Parasitic Inductance

Vdc =600V, Inductor current =16A

Normal layout

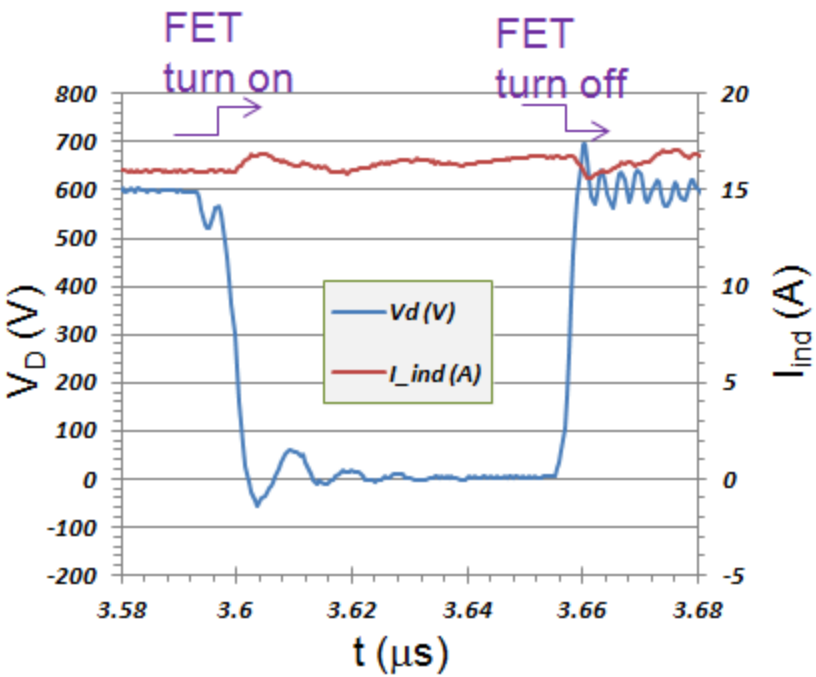

4cm^2 loop inserted to induce spike

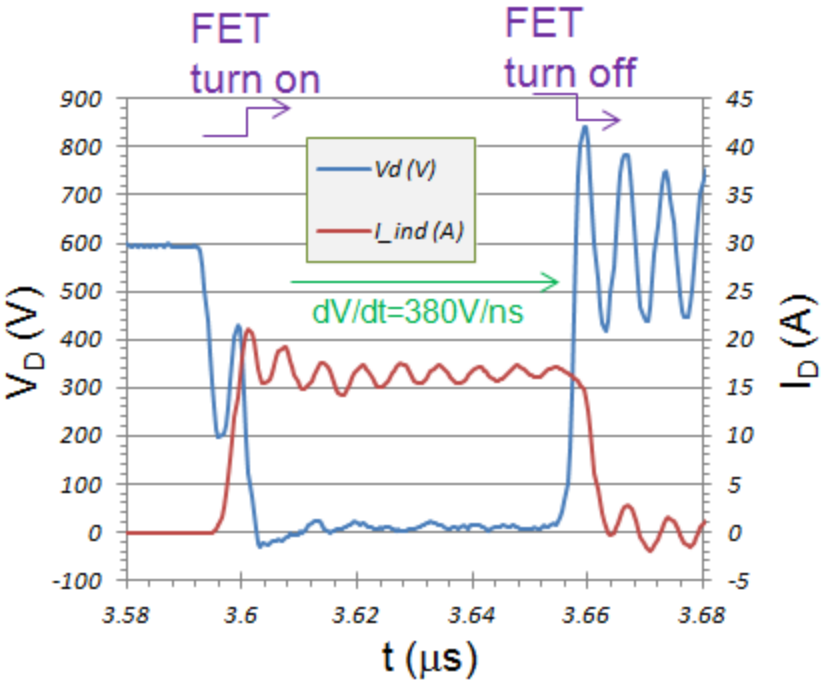

- GaN HEMTs successfully turned on and off 16A current at 600V bus with parasite inductor loop of 4cm^2 (90nH with current probe on).
- Voltage transient up to 380V/ns and spikes up to 850V.
- Device has no functionality change after 100,000 shots of 850V spikes.
- Datasheet spike rating 750V for safety margin.

600V Converter Operation at 100kHz

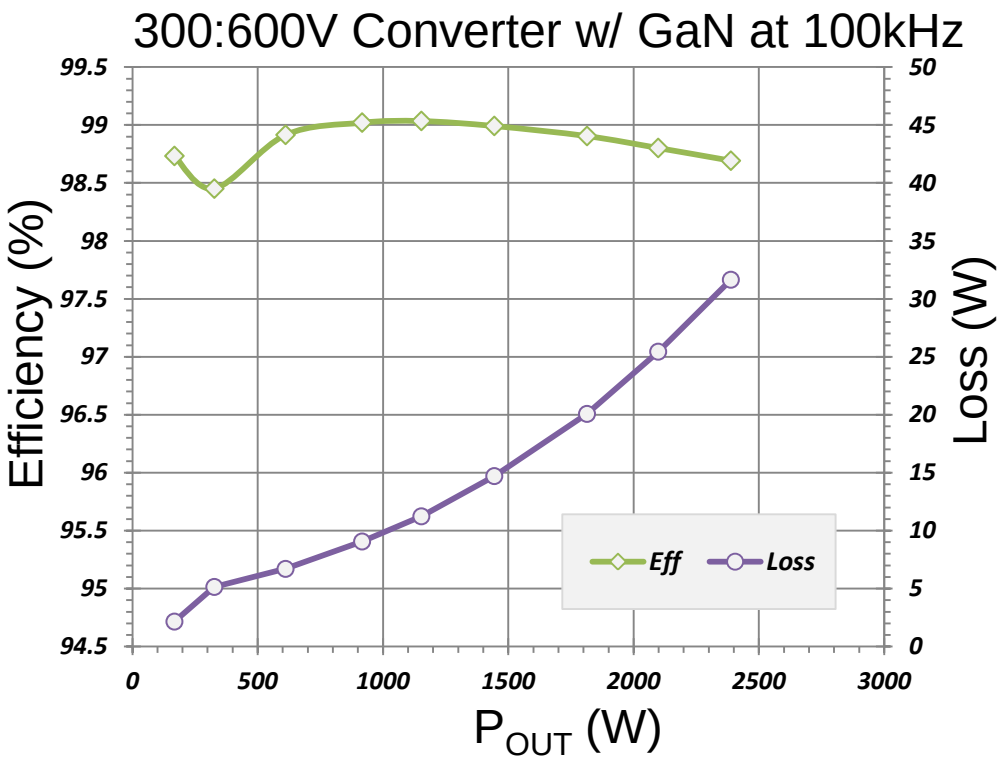

- GaN-on-Si HEMT achieves 99% 1:2 boost efficiency at 100kHz
- Low on-resistance, low charge and high speed are key in obtaining high efficiency for compact systems running at high PWM.

APEC

transphorm

600V GaN-on-Si HEMT Voltage Blocking Capability at 175°C

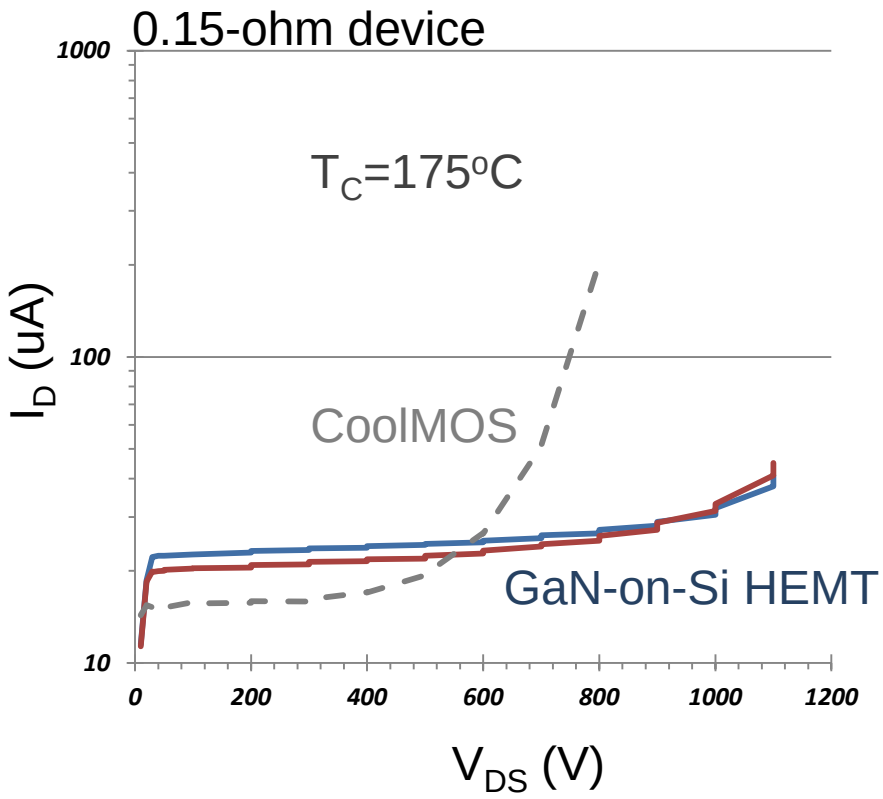

- kV capability at 175°C.

High Temperature Converter Operation Compared with Si CoolMOS

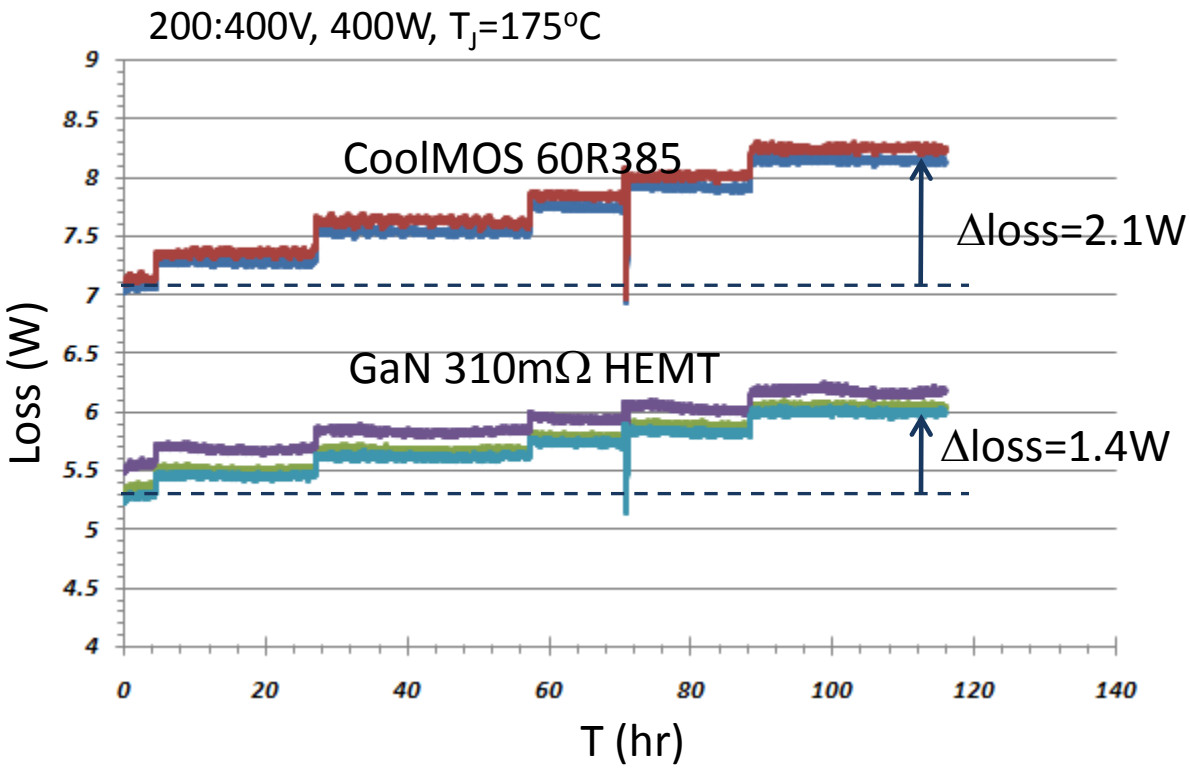

- GaN devices show lower increase of loss at high T.
- Due to less heating & lower temperature sensitivity.

GaN-on-Si Hybrid HEMT High Temperature Operation up to 1.5kW at T_C=187ºC (T_j=215ºC)

Hi-Temp operation of GaN HEMT

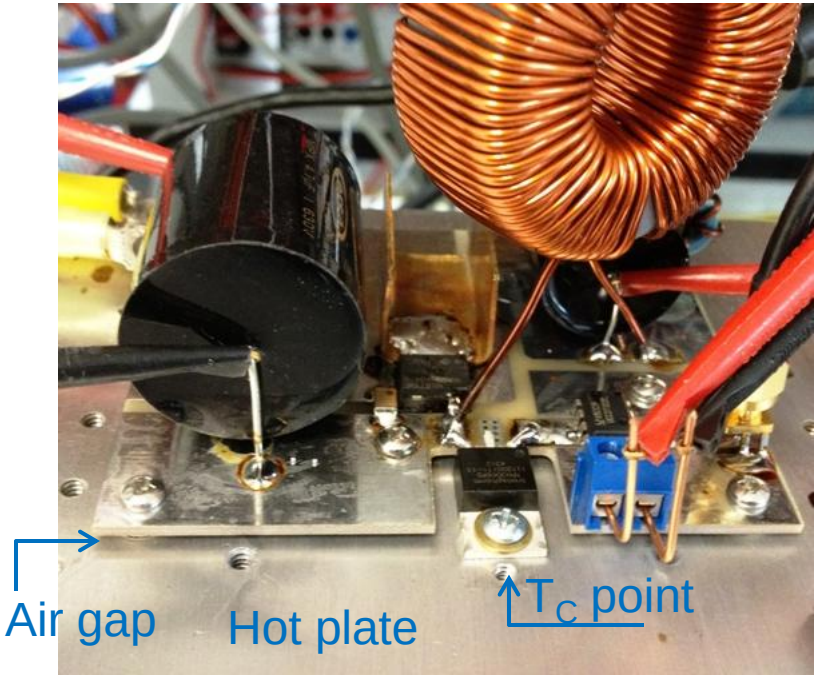

230V:400V boost Converter
f=100kHz

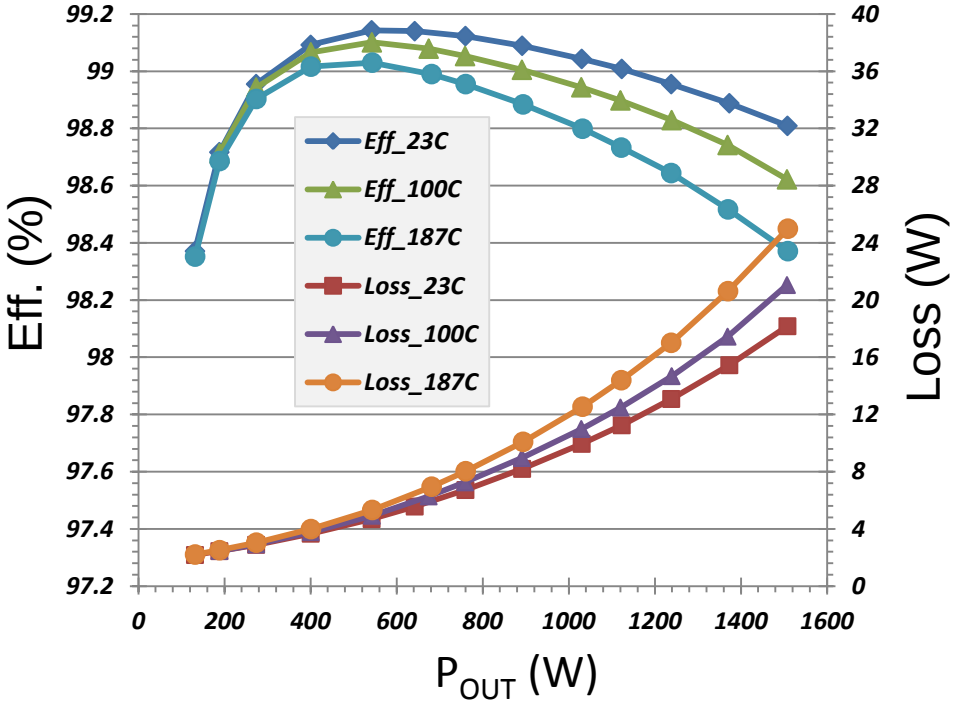

- GaN-on-Si can operate at high volt & high current at Tj=215C with ease
- HT performance lends support for inherent robustness

Preliminary Life Time Indication

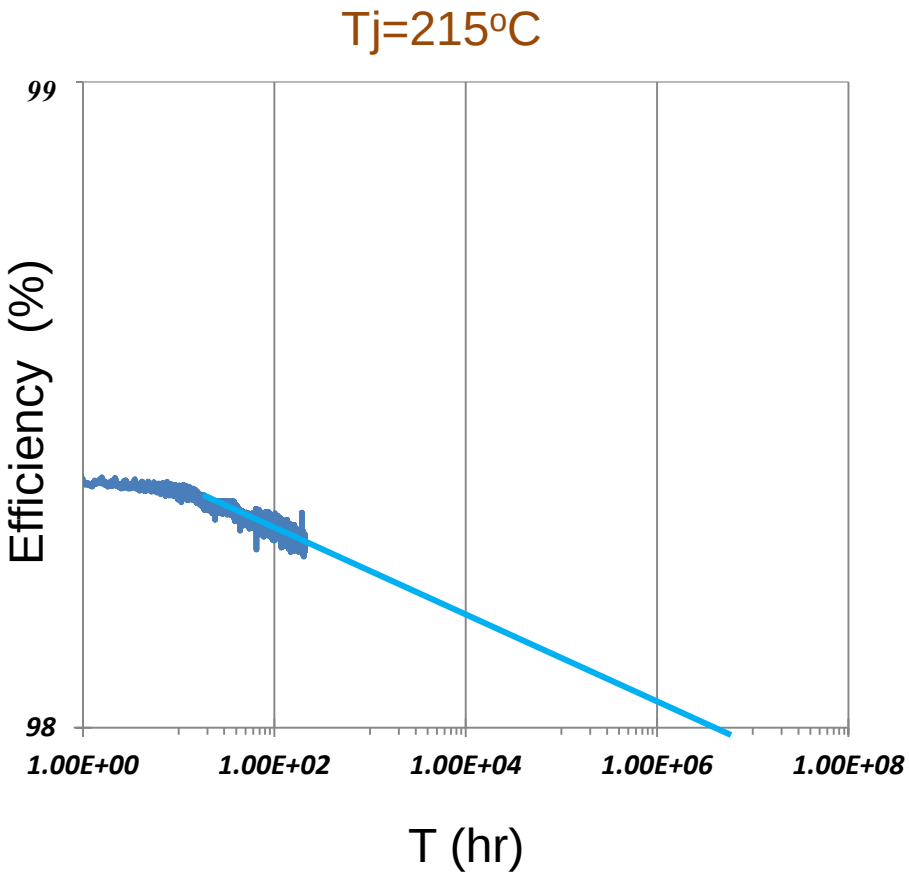

10^6 hr for Eff. to degrade by 0.2%
(By no means device life time prediction)

APEC

transphorm

Device Paralleling for Extended Power Without Reducing Speed and Efficiency

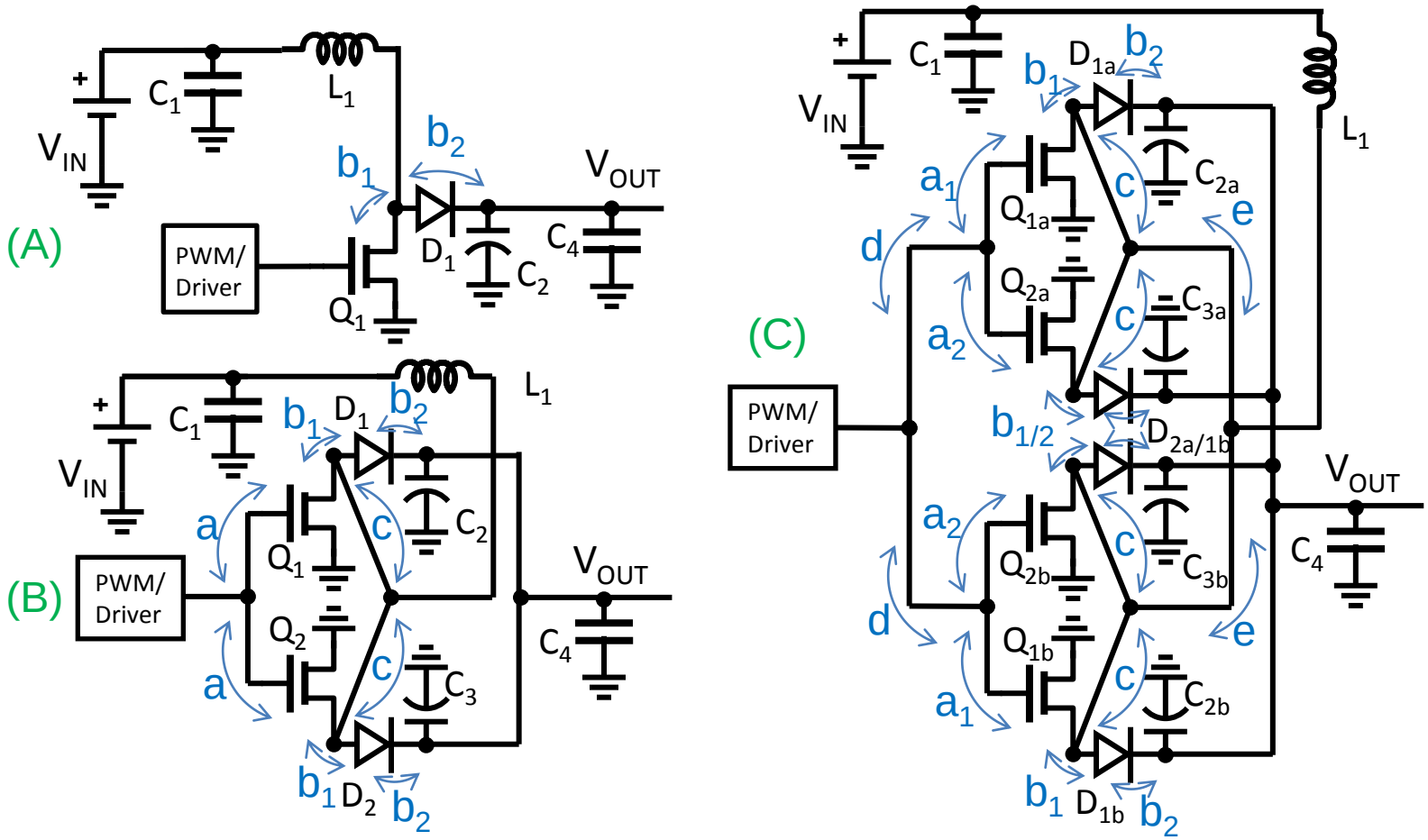

- Scalable unit cell
- Equal-length fan-in
- Low-impedance diode termination
- Equal-length inductive fan-out

Parallel GaN HEMT Boost Converter Performance (4x)

Vin/Vout =220V/400V, f=100kHz

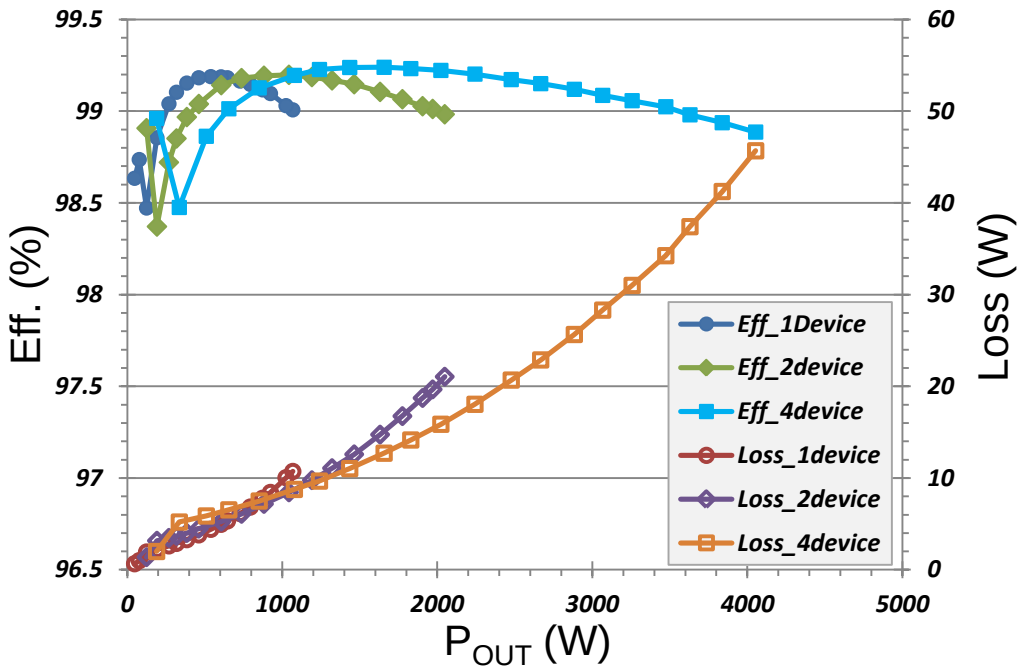

- Roughly 4x increase in output power
- No loss in efficiency

12

Table of Contents

GaN HEMT Offers Low Qrr in Reverse Conduction Mode, Enables Simple Hard-switched Bridge Operation

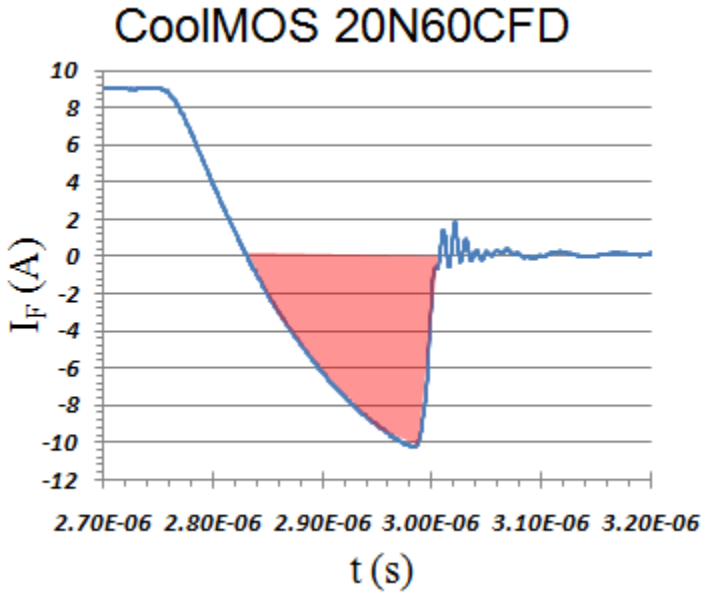

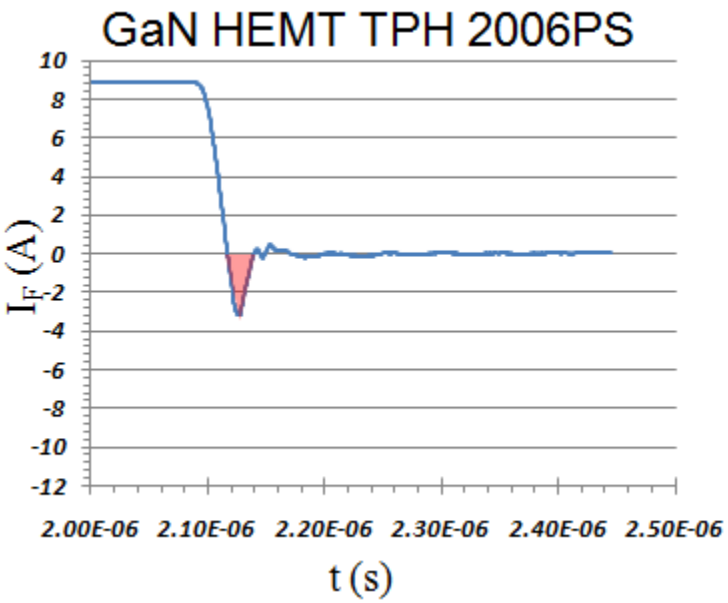

Qrr=1000nC at 9A, 400V

Qrr=54nC at 9A, 400V

- Both measured in the same test board
- Transphorm GaN HEMT was tested at 450A/μs with little ringing
- CoolMOS was not stable at 450A/μs. dI/dt reduced to 100A/μs for stability.
- GaN HEMT has Qrr of ~20x less than CFD-type CoolMOS (Low Qrr design).

14

Device Suitability for Hard-switched Bridge Applications

Bridge configurations

IGBT

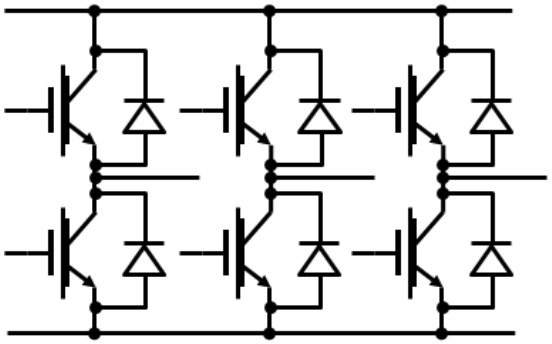

GaN HEMT

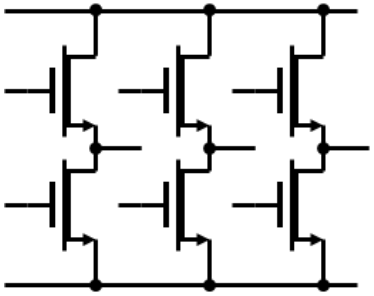

Bridge operation properties:

	Si MOSFET	Si IGBT	GaN
Initial forward drop (V_f)	**No**	**Yes**	**No**
Ron Resistance (R_{ON})	**Low**	**Extremely Low**	**Very Low**
Reverse conduction	**Yes**	**No (Need FW-Diode)**	**Yes**
Reverse Qrr (body diode)	**High (hard switch bridge impractical)**	**NA**	**Low**
Operation speed*	**Fast**	**Slow to Medium**	**Very fast**
Overall bridge performance	**Poor**	**Good**	**Superior**

15

Performance Benchmarking Between IGBT and GaN Bridges

Si IGBT Bridge Converter

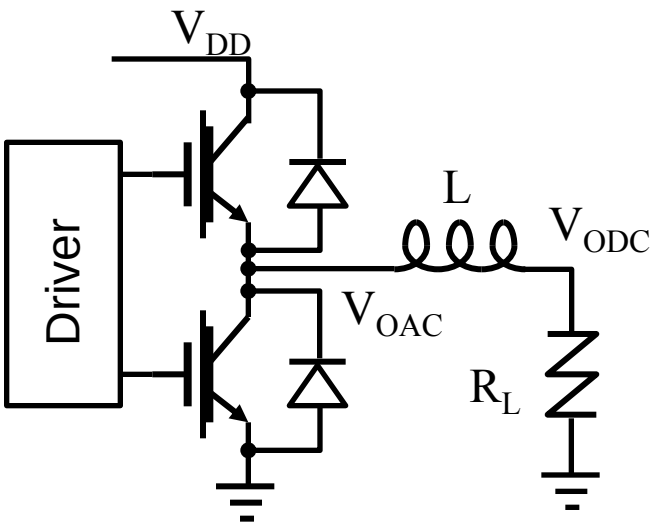

GaN Bridge Converter

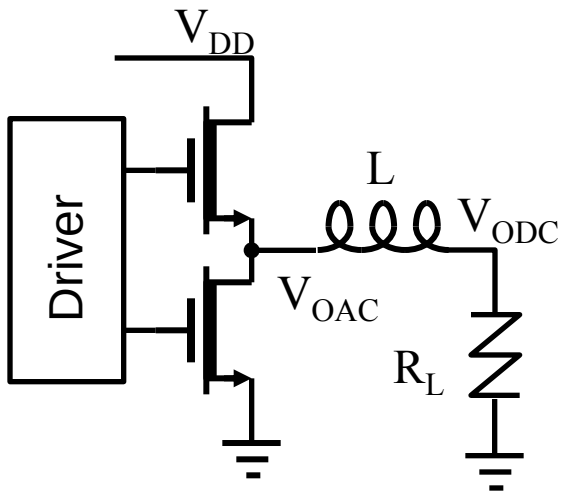

- Buck converter is configured from a half bridge
- 2 state-of-the-art HF IGBTs + 2 state-of-the-art SiC SBDs were used in IGBT bridge
- 2 Transphorm GaN HEMTs were used in GaN bridge

Spec comparison:	*IGBT*	*GaN*
Vbd	*600 V*	*600 V*
Imax at 25°C	*23 A*	*19A*
Imax at 100C	*12 A*	*14A*
Vce (Ron)	*2.1 V at 12A*	*(0.15 Ω)*

Output Waveforms Between IGBT and GaN Bridges

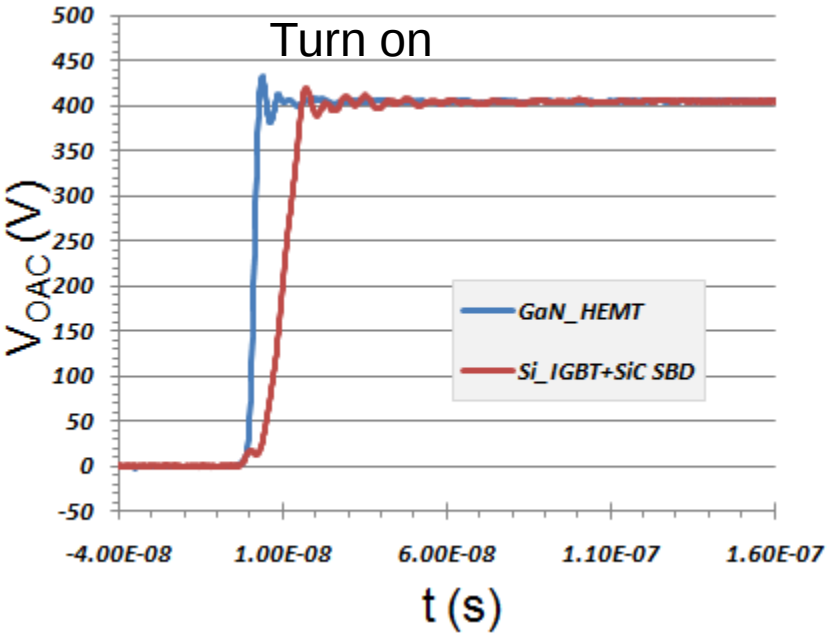

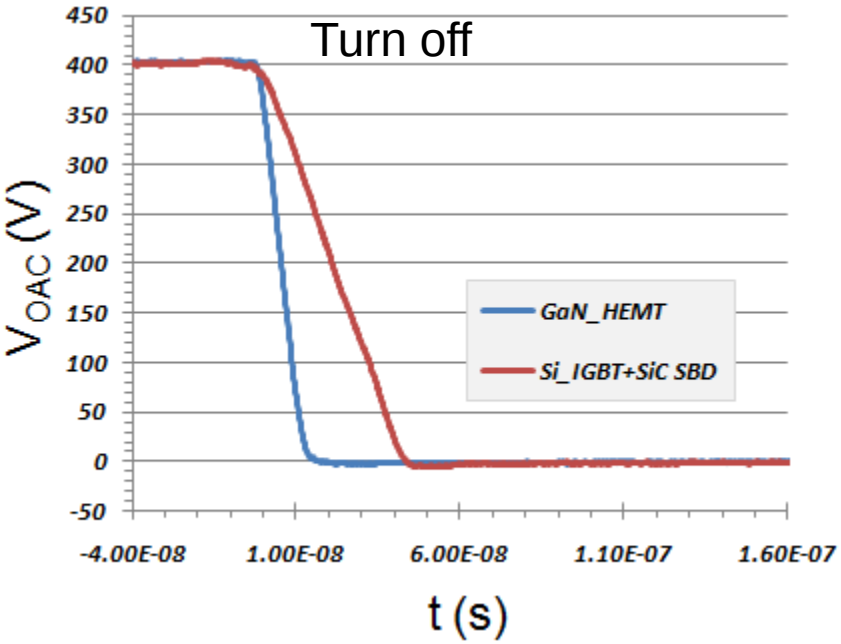

Rise time:
GaN = 2.8 nS (1.5-2ns)
Si IGBT = 7 nS

@
400V
4.5A

Fall time:
GaN = 8 nS
Si IGBT = 42 nS

- GaN has 3-5x less rise time: Reduced commutation loss
- GaN has 5x less fall time: Much less output charging loss

400-200V Buck Performance as a Function of Frequency

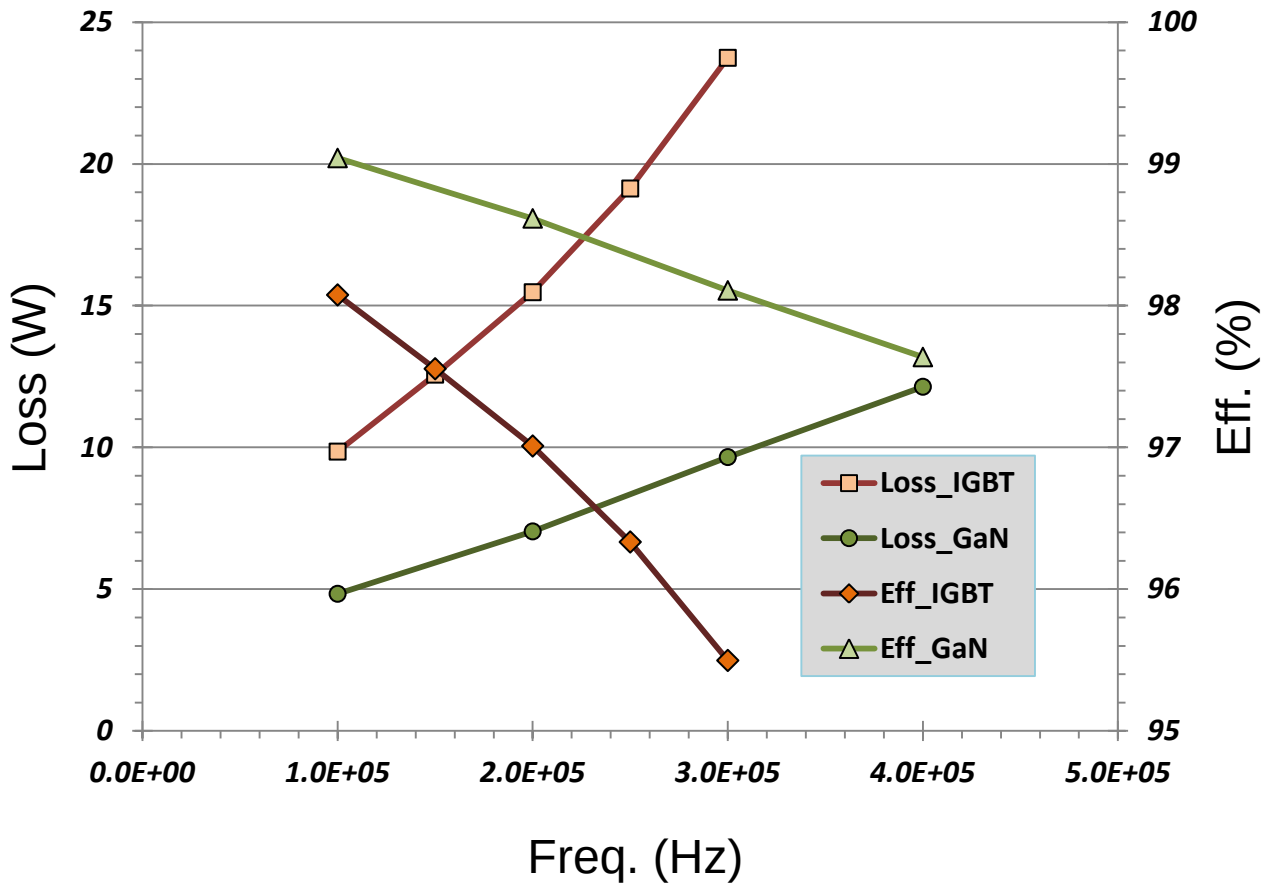

- Si IGBT loss escalates as frequency increases (breaking down at 400kHz)
- GaN bridge converter maintains >98% at 300kHz

High PWM frequencies enable inductor/capacitor size reduction

GaN Diode-free™ 3-Phase Bridge Modules

Module Schematics

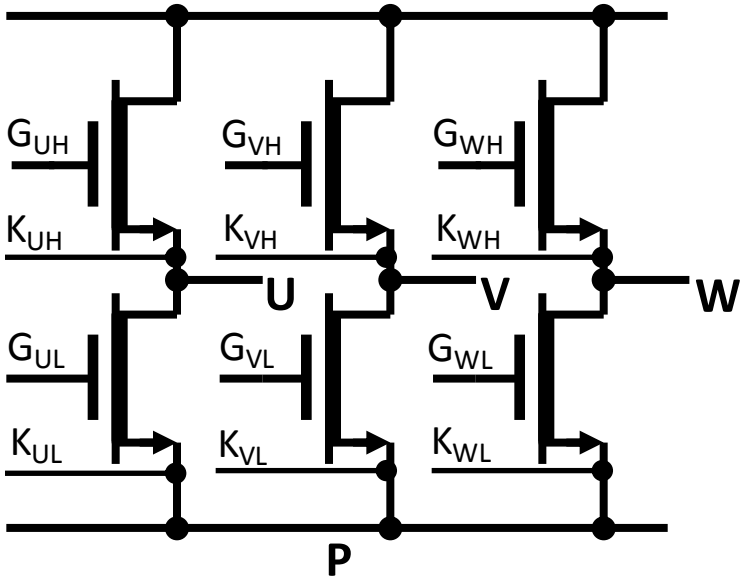

Module Package

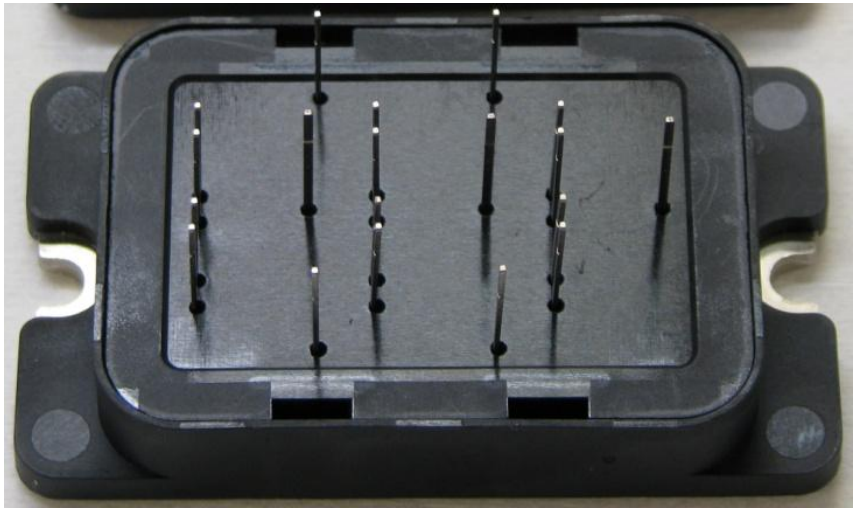

Module spec:

- *6 in 1 switches*
- *600V, 14A capability at T_C = 100°C*

Transphorm's High-Frequency 3-Phase GaN Motor Drive Inverter

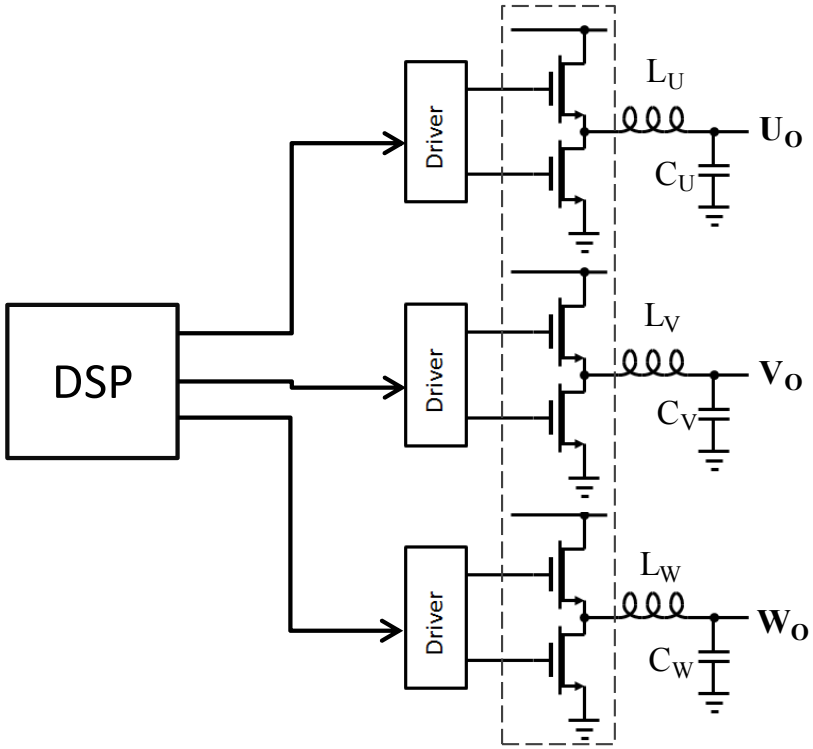

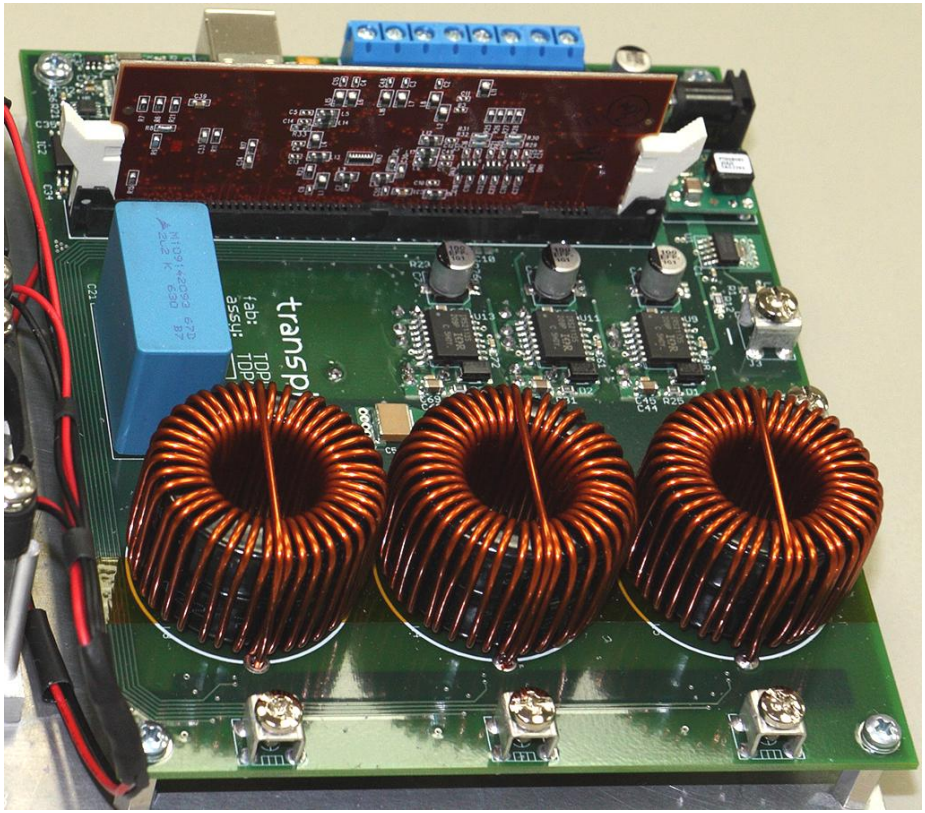

Available as Demo kit from Transphorm

- High frequency design enables compact filter
- Pure Sine-wave output eliminates un-wanted PWM stresses on motor

Project supported by ARPA-E

Output Current Waveform Comparison

IGBT Inverter: PWM Power

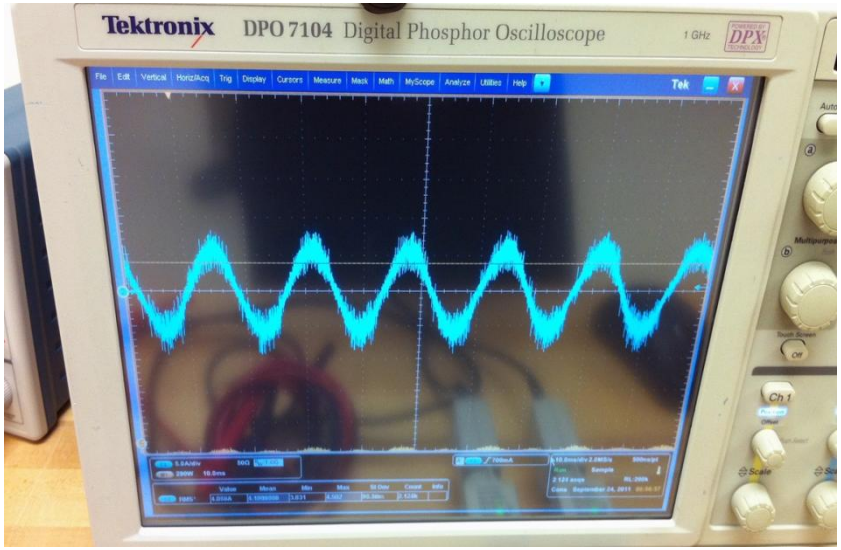

GaN Inverter: Sine-wave Power

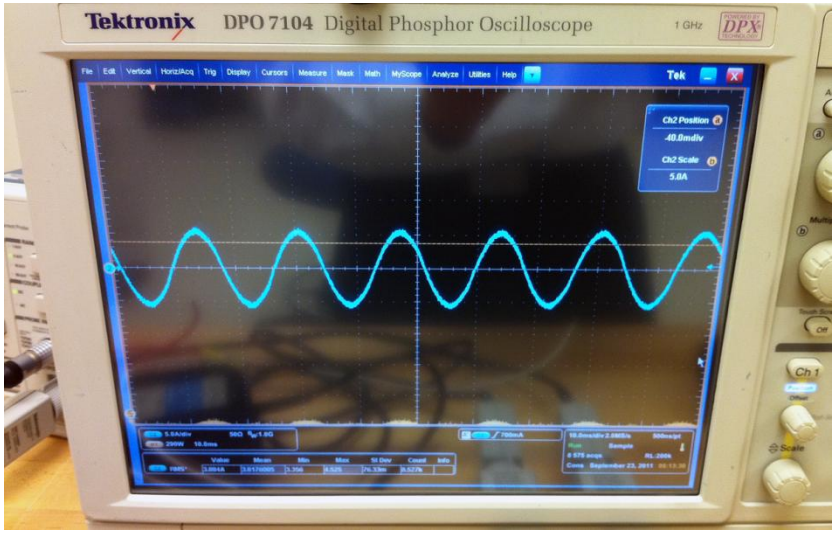

- GaN inverter operating at 100 kHz with compact filter & pure Sine-Wave output
- IGBT inverter operating at only 15kHz with PWM output
- GaN inverter output current is spike-free, ideal for motor drive

GaN Motor-drive at 100kHz with Filter Vs. State-of-the-art IGBT at 15 kHz w/o Filter

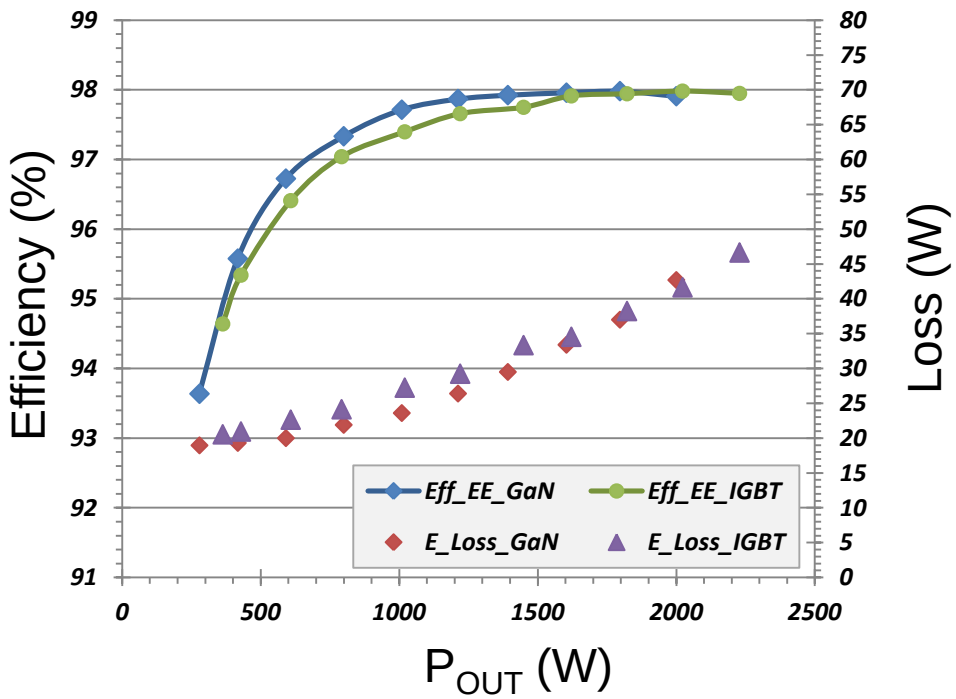

- GaN Inverter efficiency exceeded IGBT:
  GaN: 100kHz, include filter loss
  IGBT: 15kHz, w/o filter loss
- Superior efficiency margin of GaN allows high PWM and filter losses

Motor Drive System Efficiency: GaN Vs. State-of-the-art IGBT

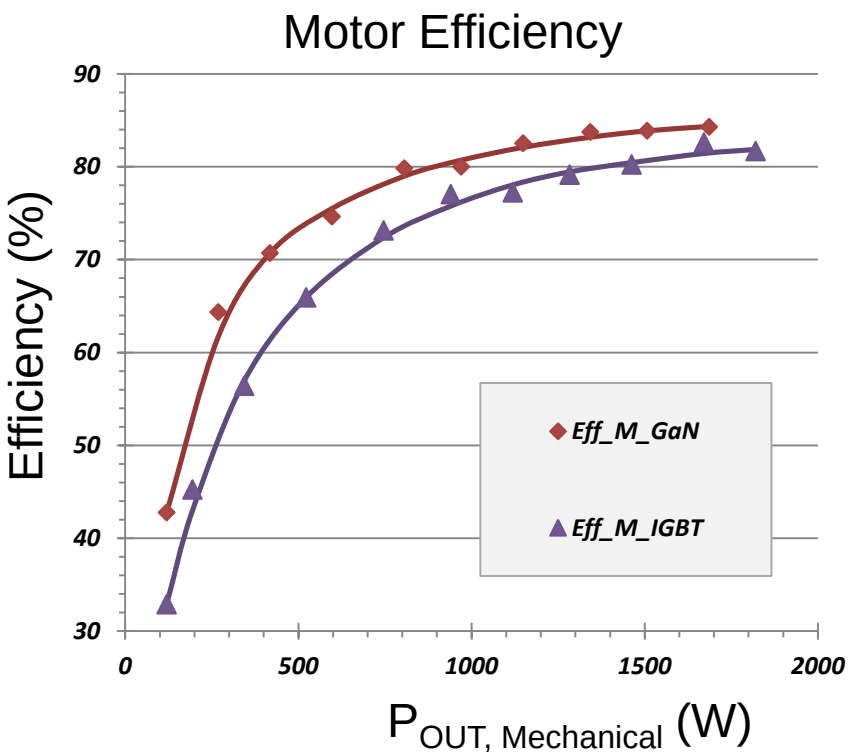

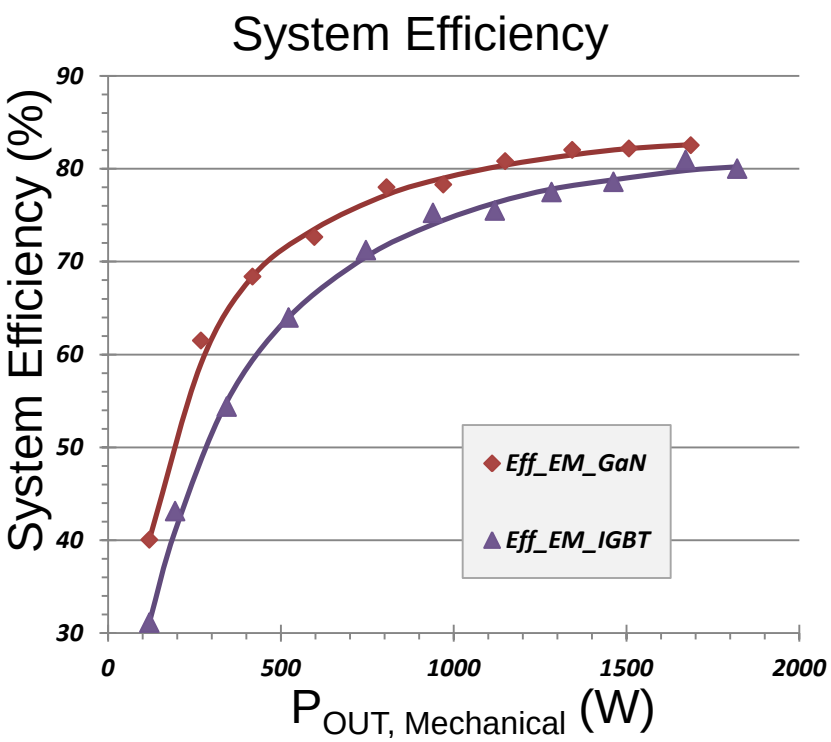

- Pure Sine-Wave output from GaN inverter significantly improved motor efficiency
- Overall system benefit is compelling:
  2.5% at full load, ~4% at mid load and ~8% at low load

10kW GaN Converter At 600V Bus

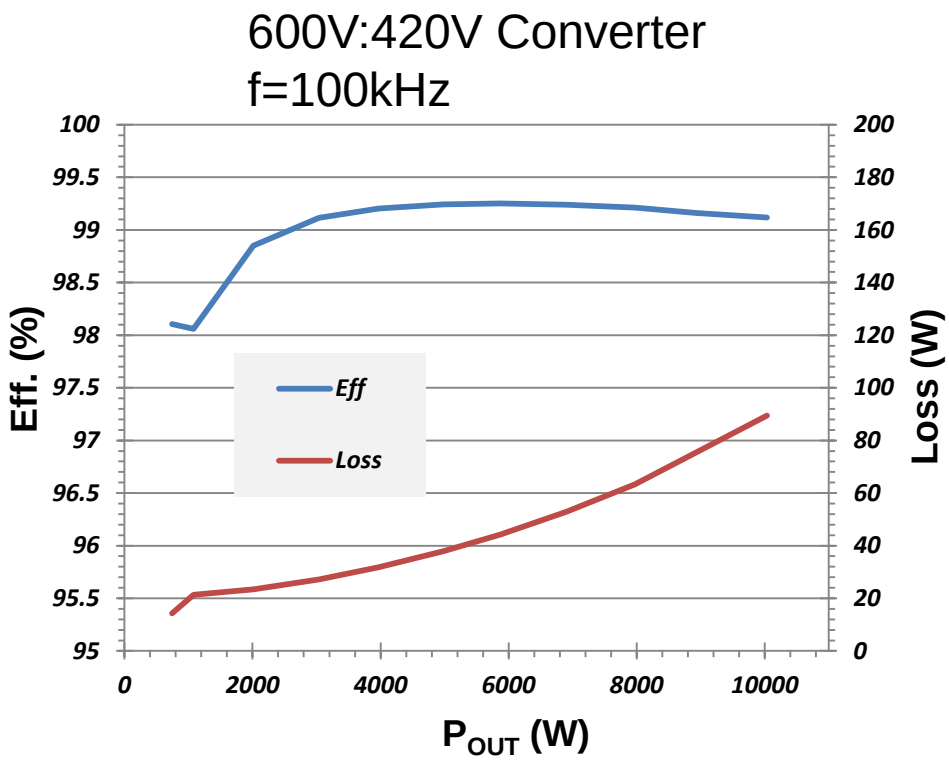

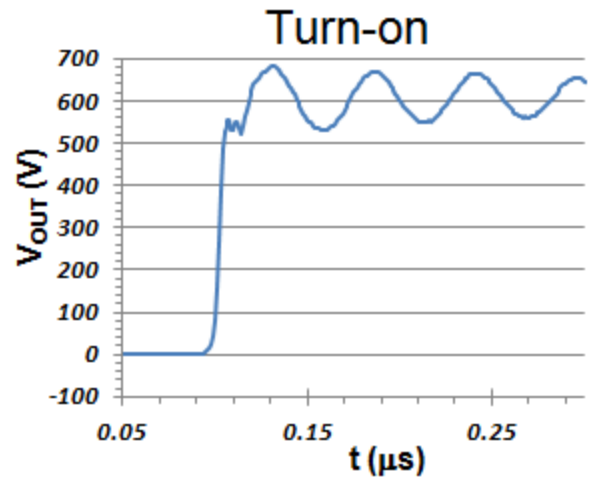

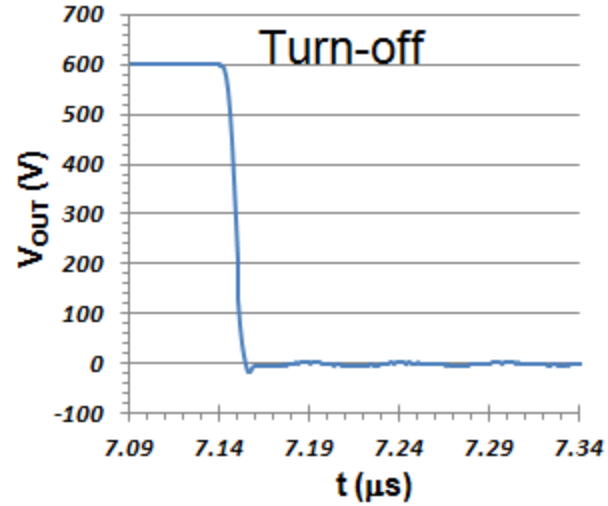

- GaN can push power conversion to new power/frequency space

Summary

1) GaN-on-Si have shown superior performance including low Ron, kV-level breakdown voltages, high spike tolerance and high temperature robustness at >200 C.
2) Device paralleling at high speed demonstrated with 4x increase in power and no loss in efficiency at 100 kHz.
2) GaN enables diode-free bridge hard-switched at 5-10x higher PWM than conventional IGBT, yet offering high efficiency.
3) Compact on-board filtering realized with high PWM, boosting motor system efficiency by 2-5%.
4) 10-kW GaN-based converter demonstrated with a single H-bridge, further scaling will enable HEV level applications.