Rompower

Frequency, where we are today, and where we need to go

Ionel Dan Jitaru

Rompower Energy Systems Inc.

6262 N. Swan Rd., Suite 200

Tucson, Arizona 85718

Tucson Arizona

OUTLINE

- Directions in topologies and operation frequency
- Magnetic limitations at high frequency
- Example of magnetic optimization for high frequency
- Magnetic structures for very high frequency

TRENDS IN TOLOPOGIES

TRENDS IN TOPOLOGIES

- Trends in Operation Frequency
- Resonant derived topologies
- ”True” Soft Transition topologies
- Future Trends

Switching Losses on the primary switchers

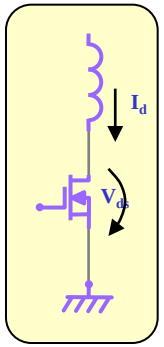

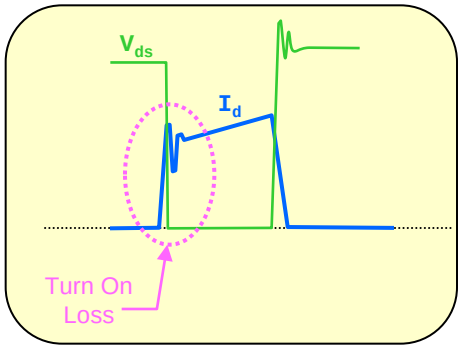

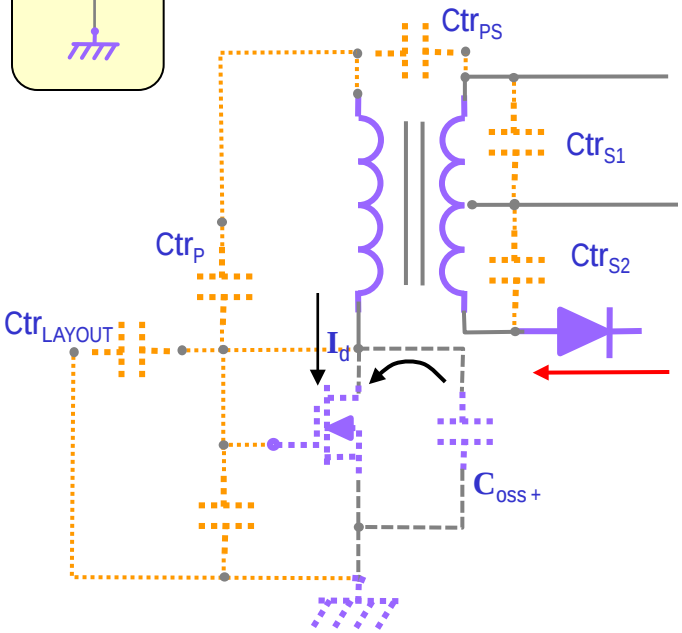

The energy contained in the parasitic capacitance of the transformer/layout is quite often higher than the energy contained in Coss

SiC and GaN technologies will not eliminate the need for Soft Switching

45W Flyback Transformer for adapters

750W Transformer for DC-DC Converter

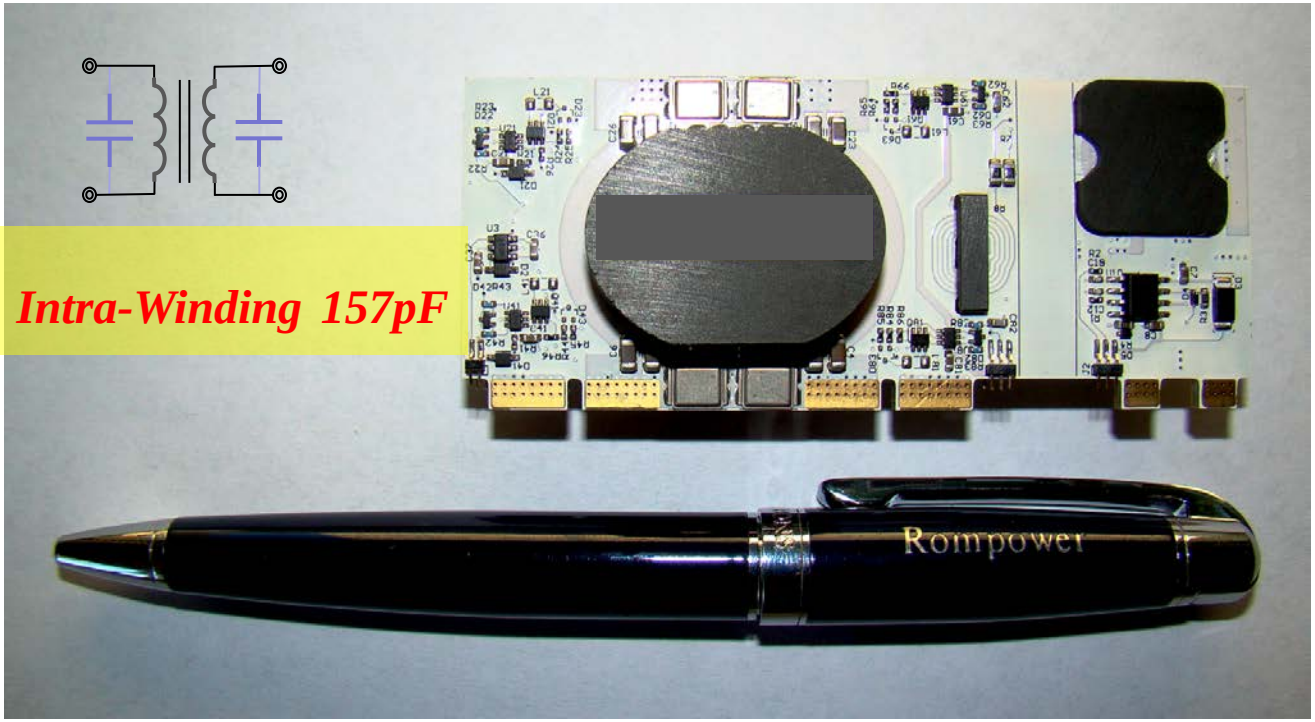

Resonant Derived Converter

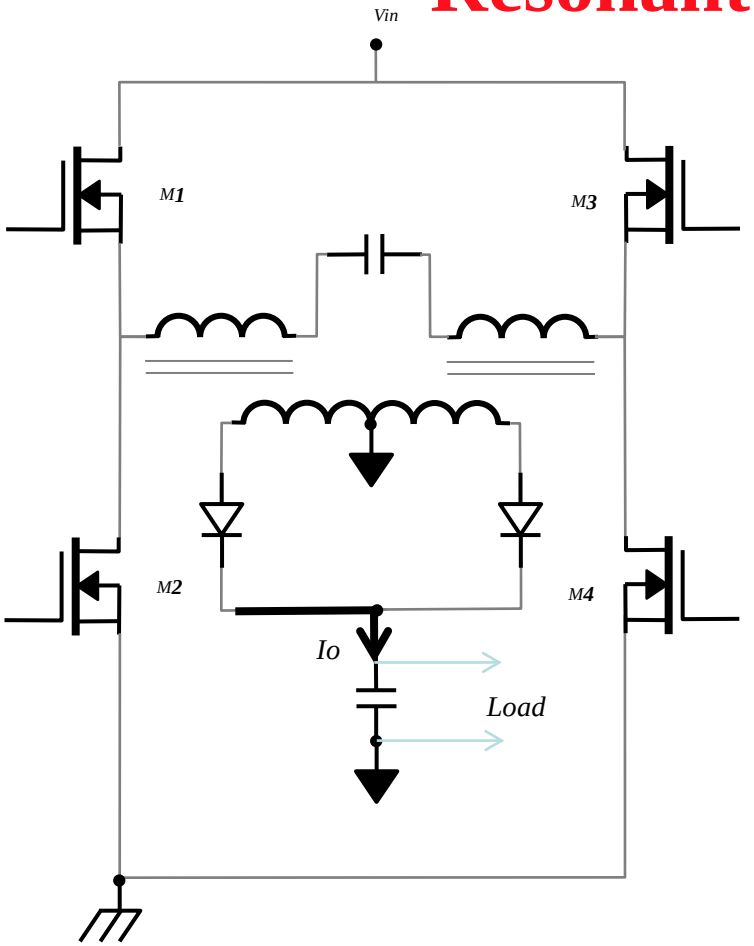

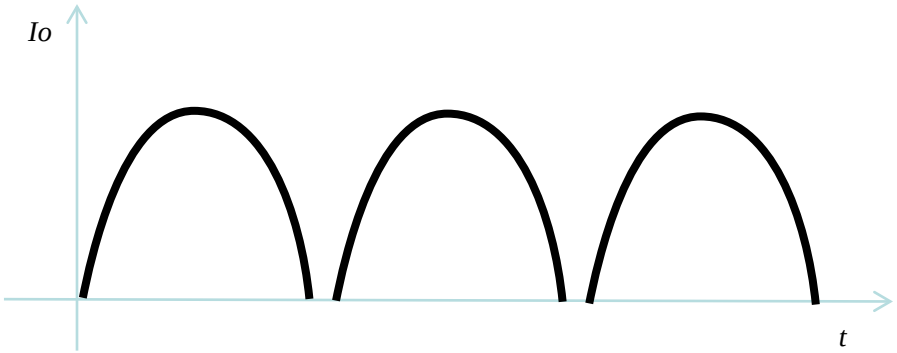

US Patent 7,187,263B2

Reverse Recovery Effect in a Double Ended Converter

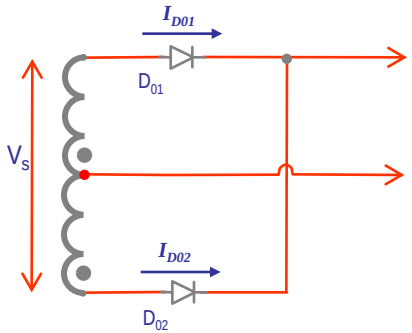

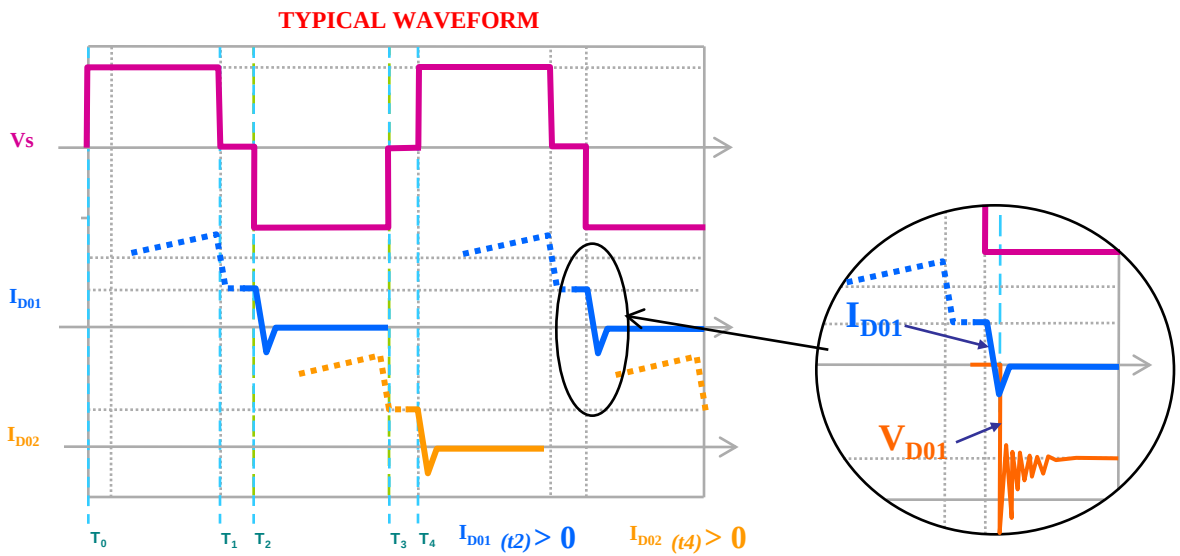

Current Shaping Effect in a Double Ended Converter

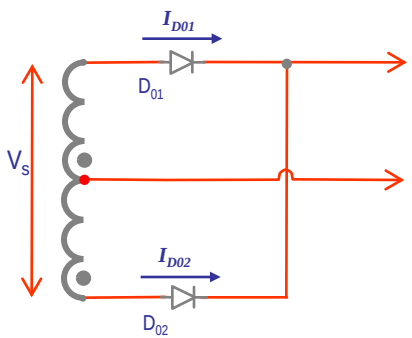

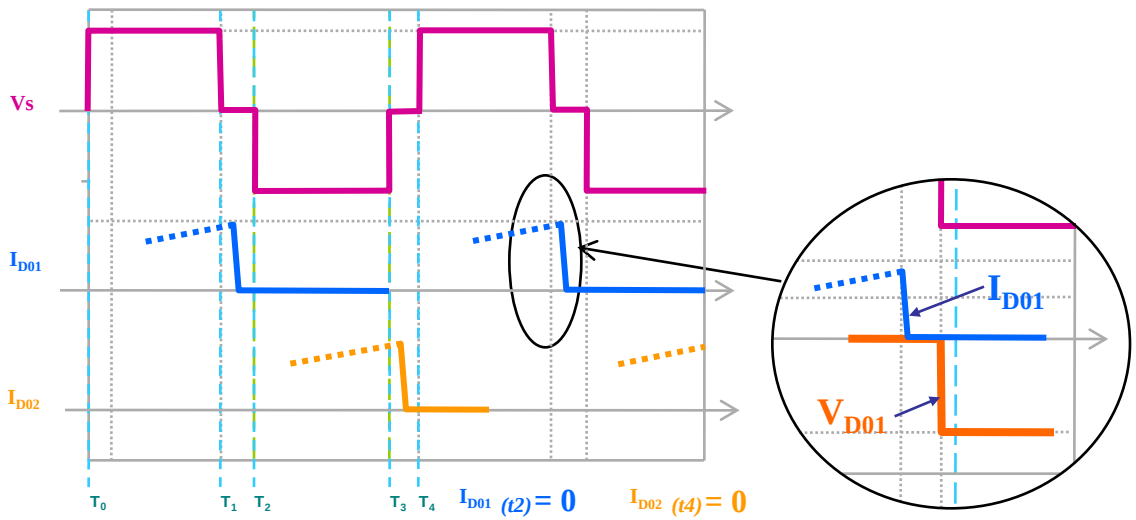

HARD SWITCHING HALF BRIDGE TOPOLOGY

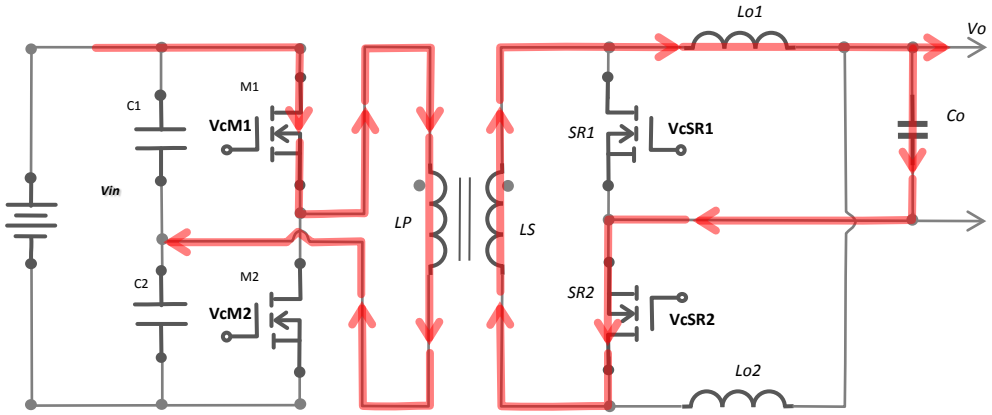

t0 – t1

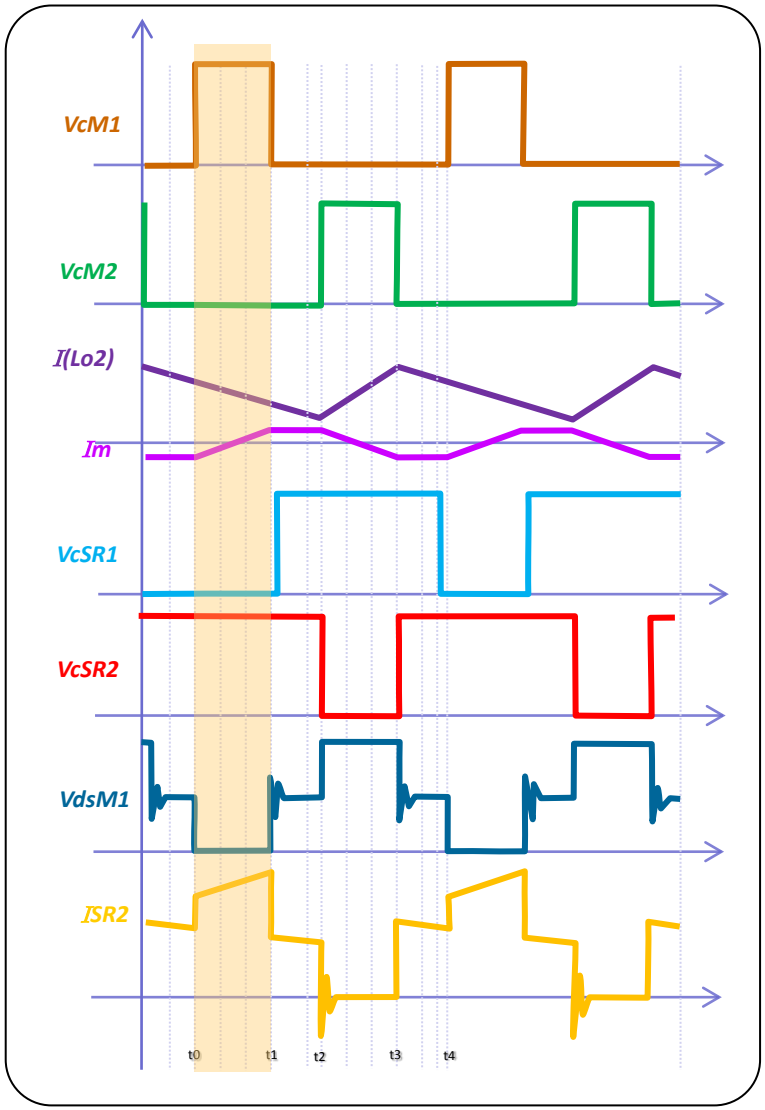

HARD SWITCHING HALF BRIDGE TOPOLOGY

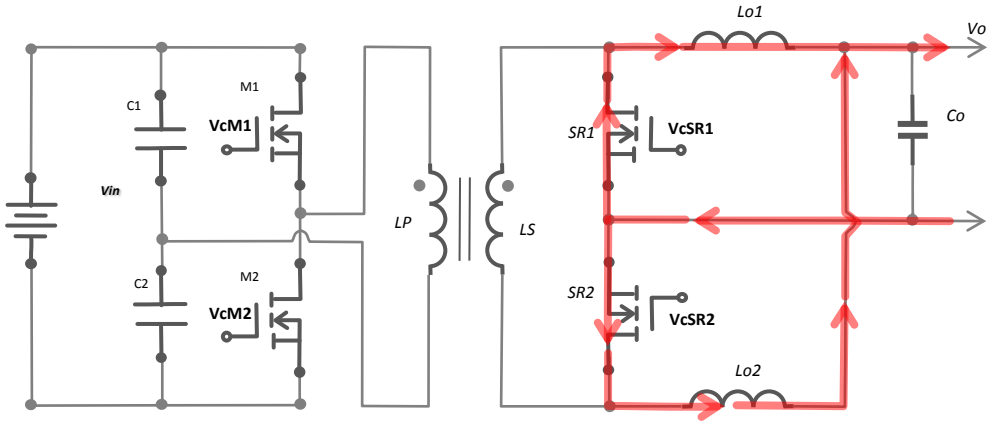

t1 – t2

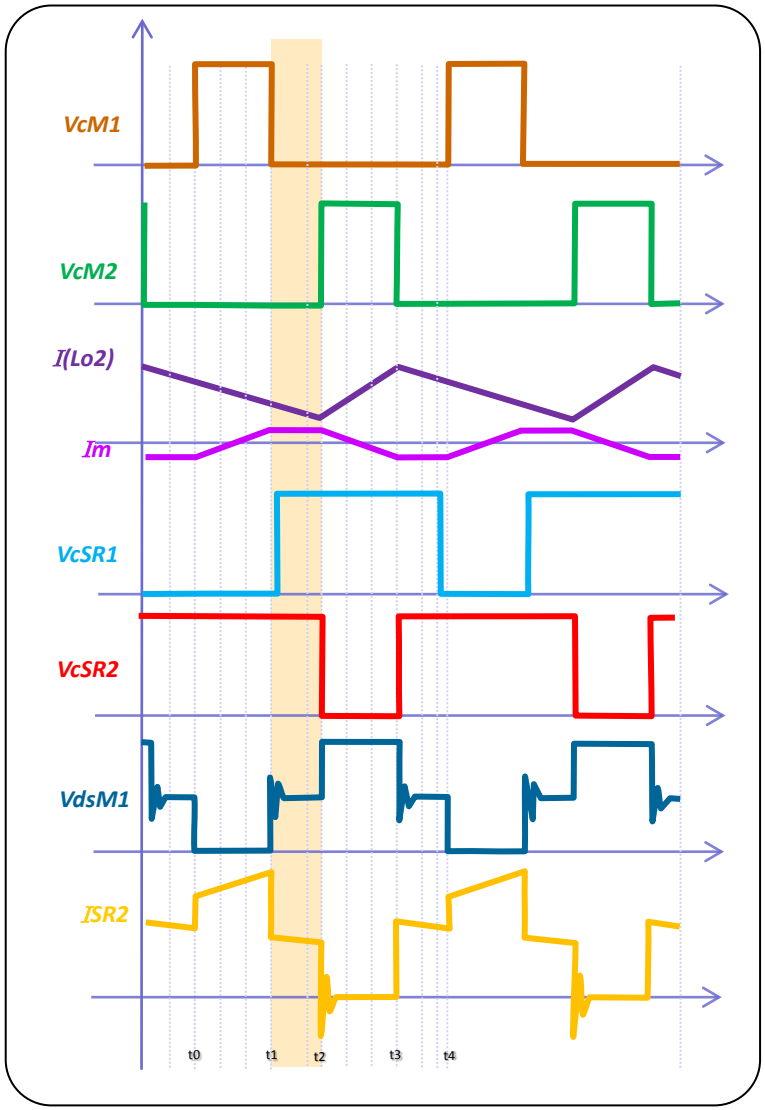

HARD SWITCHING HALF BRIDGE TOPOLOGY

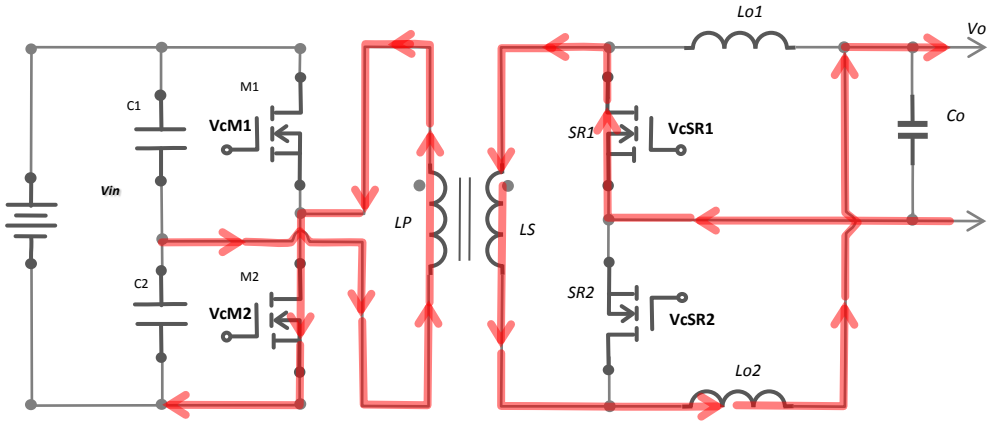

t2 – t3

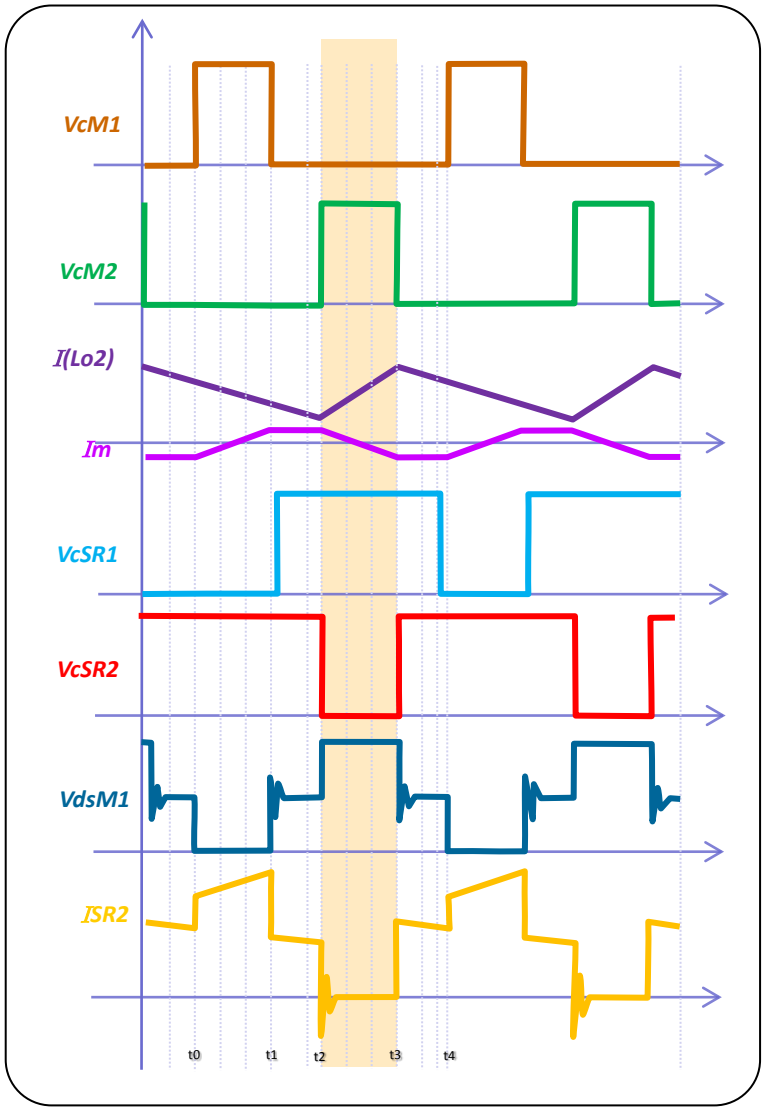

SOFT SWITCHING HALF BRIDGE TOPOLOGY

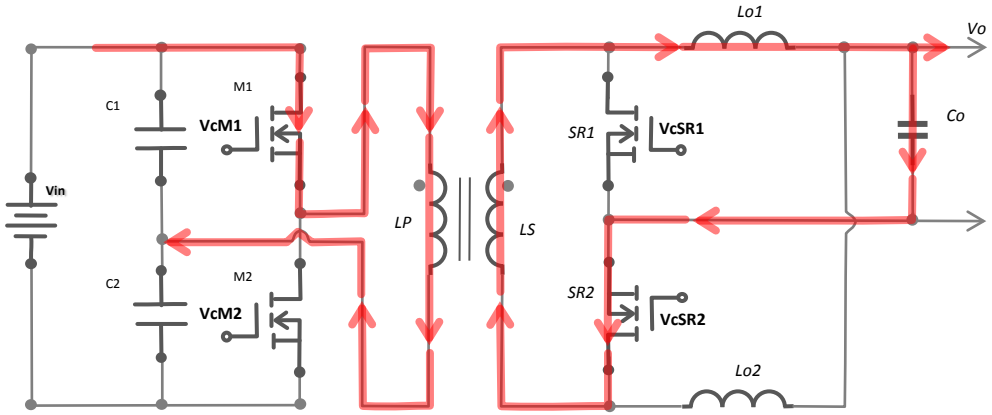

t0 – t1

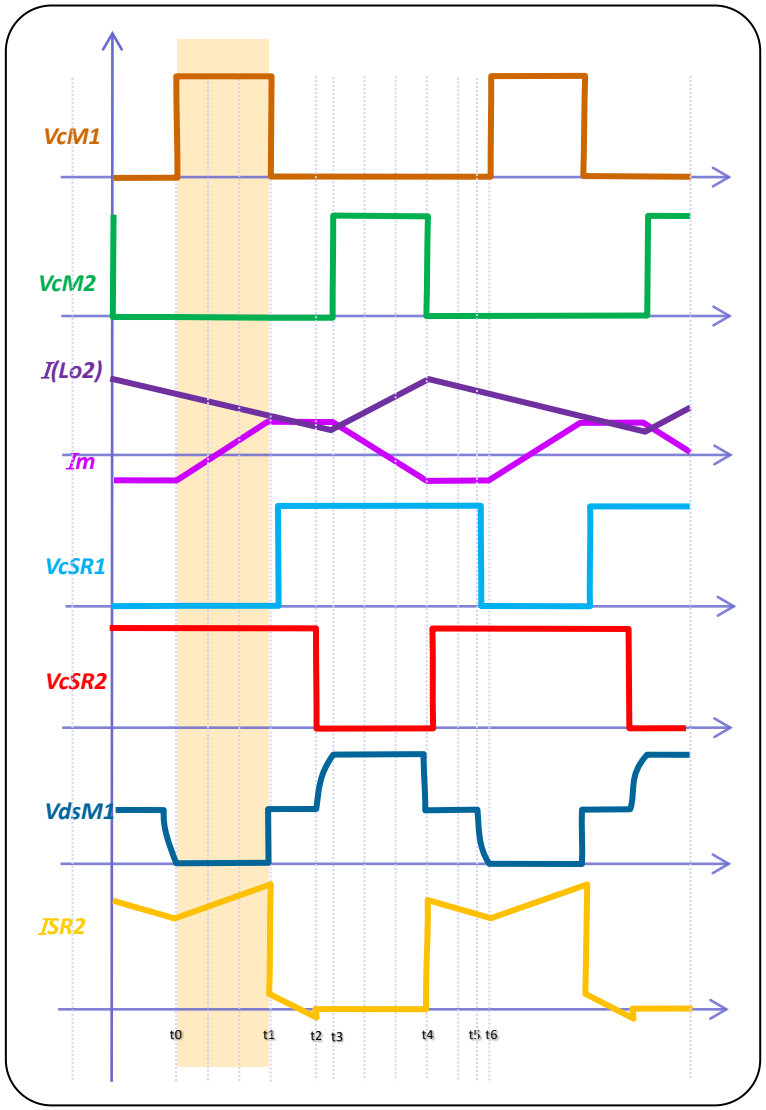

[8]

SOFT SWITCHING HALF BRIDGE TOPOLOGY

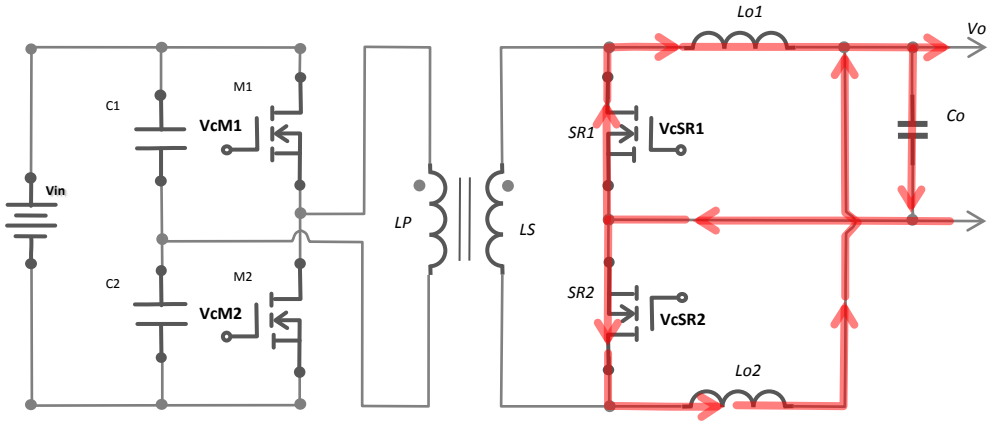

t1 – t2

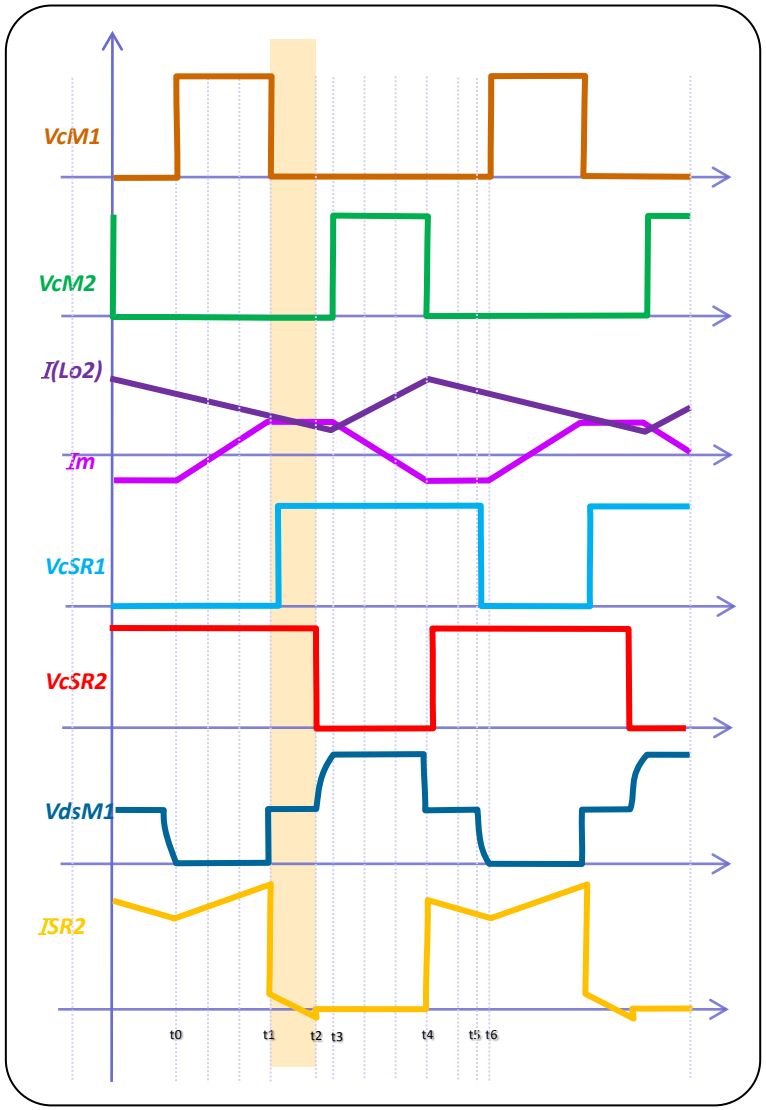

[8]

SOFT SWITCHING HALF BRIDGE TOPOLOGY

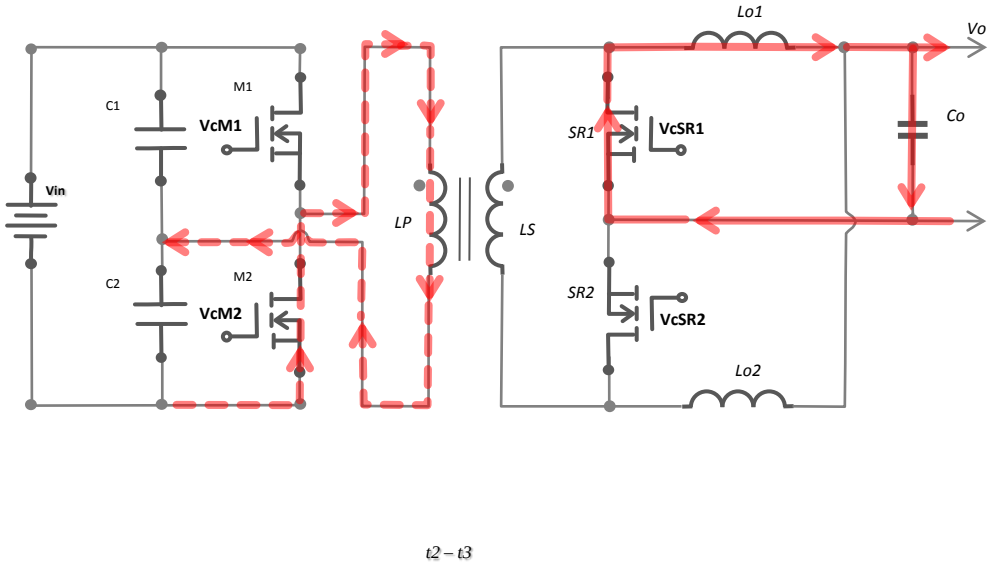

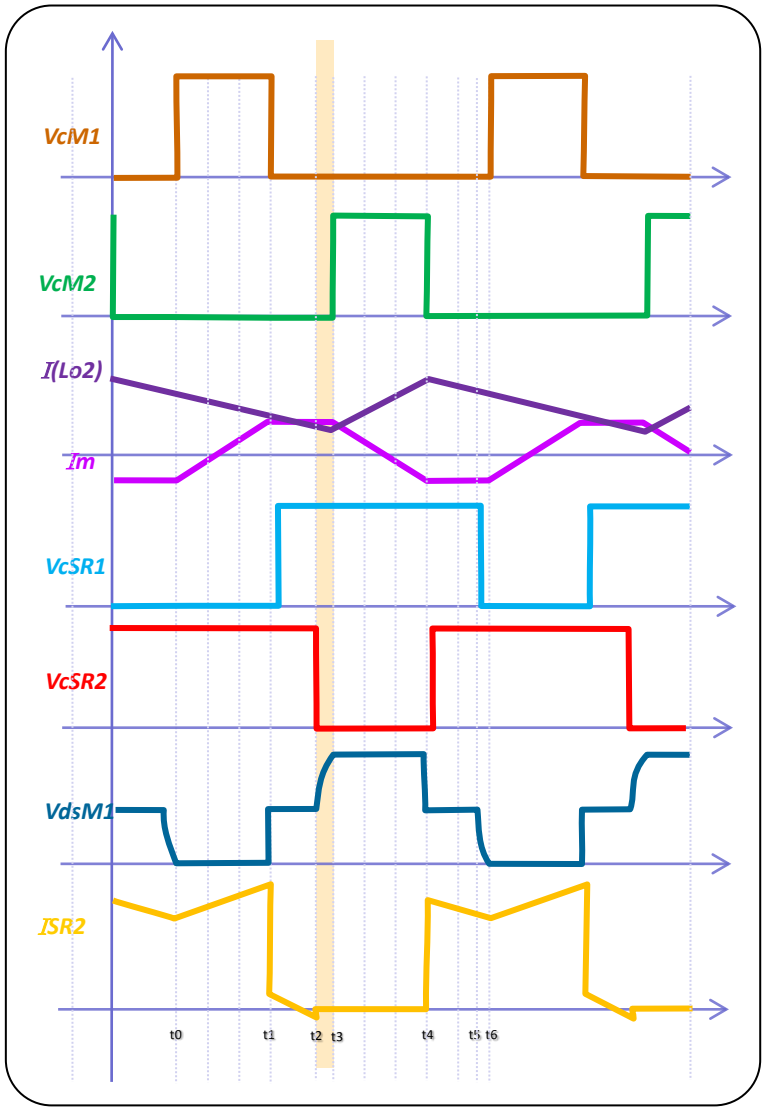

[8]

SOFT SWITCHING HALF BRIDGE TOPOLOGY

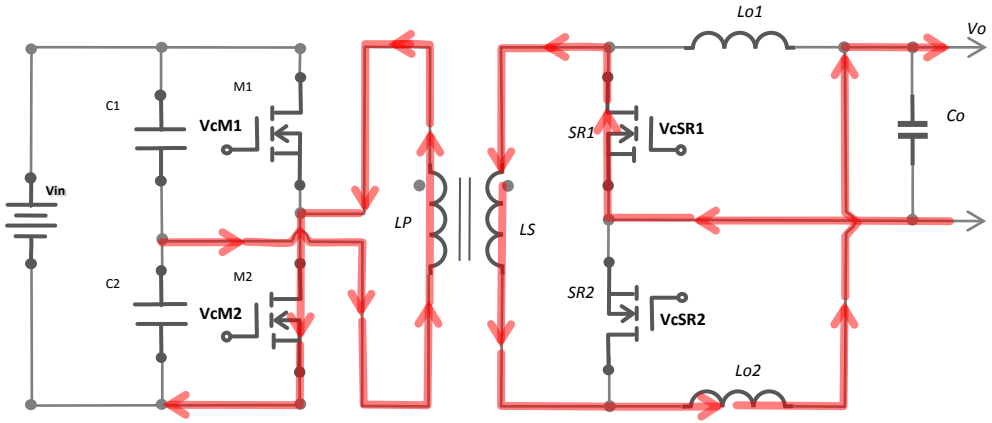

t3 – t4

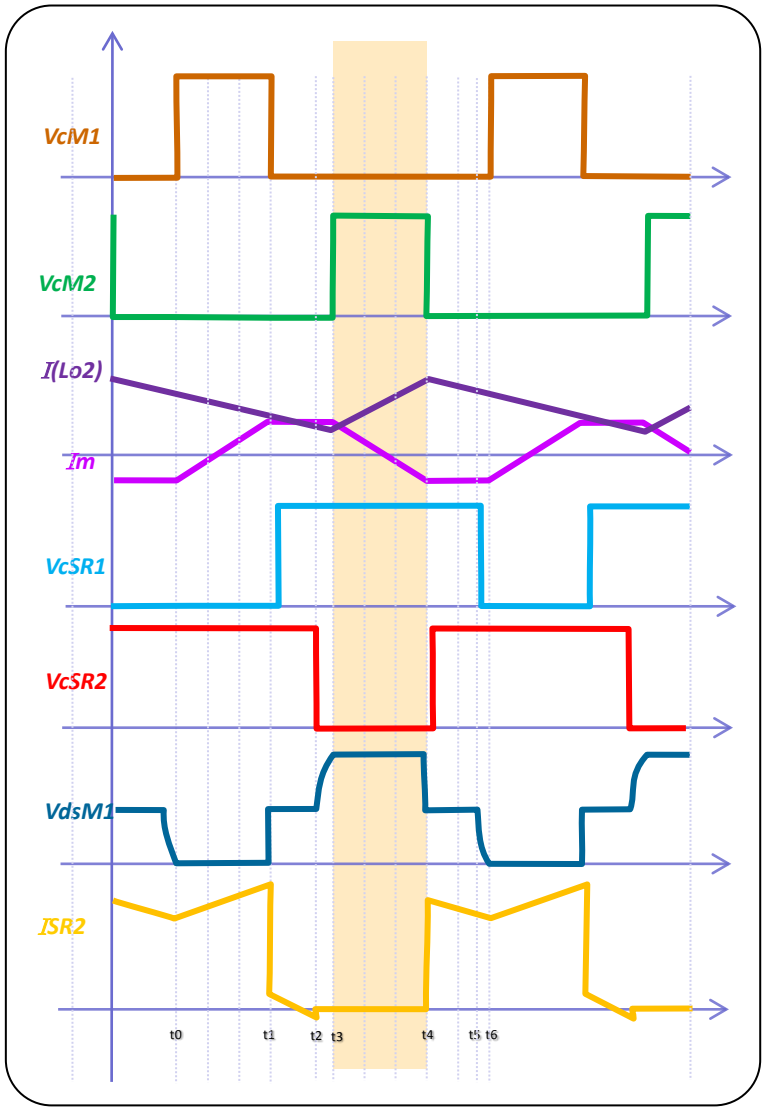

[8]

Experimental Data

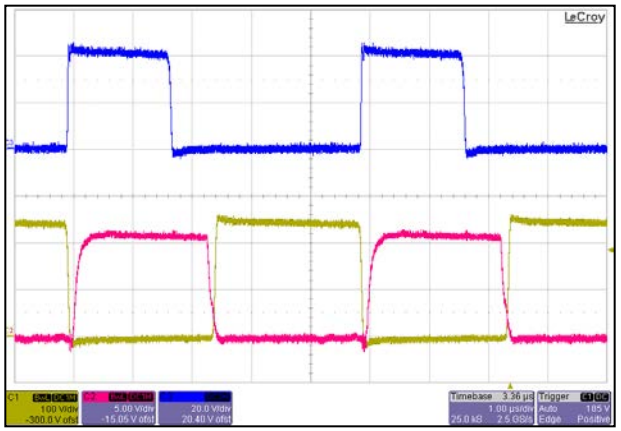

Figure 1: Vin=240V, Iout=15A, Vout=14V
Blue is Syncro Drain, Red is Primary Gate, Yellow is Primary Drain

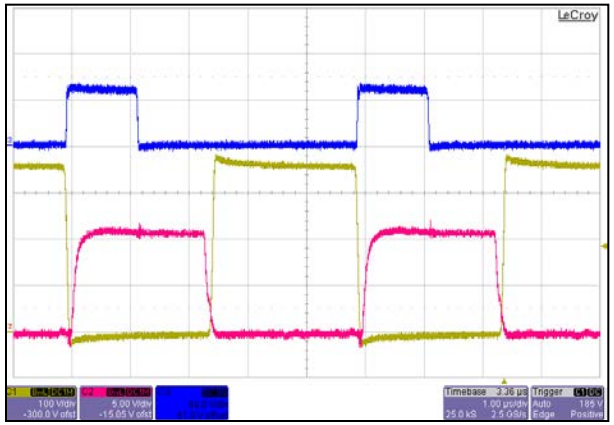

Figure 2: Vin=345V, Iout=90A, Vout=14V
Blue is Syncro Drain, Red is Primary Gate, Yellow is Primary Drain

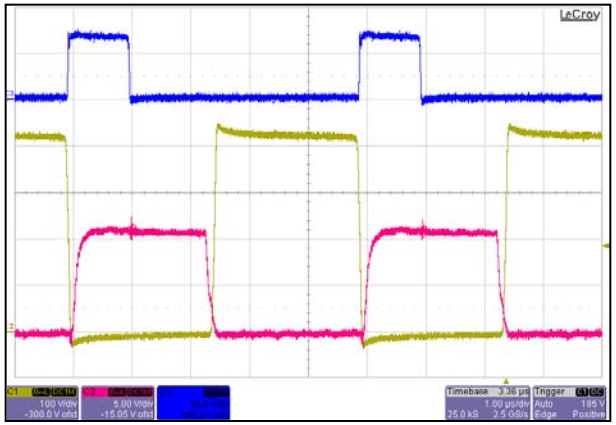

Figure 3: Vin=405V, Iout=120A, Vout=14V
Blue is Syncro Drain, Red is Primary Gate, Yellow is Primary Drain

[8]

FUTURE TRENDS

- "True" Soft Switching topologies suitable for frequency range from 250Khz to 1Mhz will be the preferred choice

- Resonant topologies such as LLC will maintain popularity due to the "idealization" of the switching devices.

- "True" soft switching topologies through sizing and control have the advantage of simplicity, low cost and in most of applications better efficiency than resonant topologies.

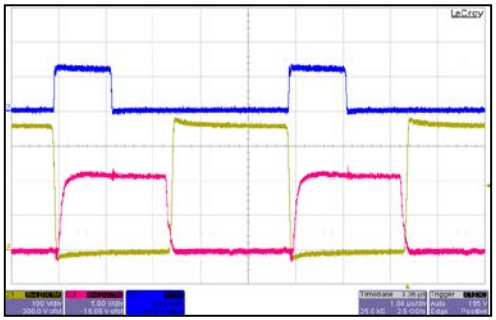

Figure 2: Vin=345V, Iout=90A, Vout=14V
Blue is Syncro Drain, Red is Primary Gate, Yellow is Primary Drain

FUTURE TRENDS…

- In the future the topology may be a Soft Switching Cell operating at Z.V.S at turn on and Z.C.S at turn off. The operating frequency may be very high in Mhz range.

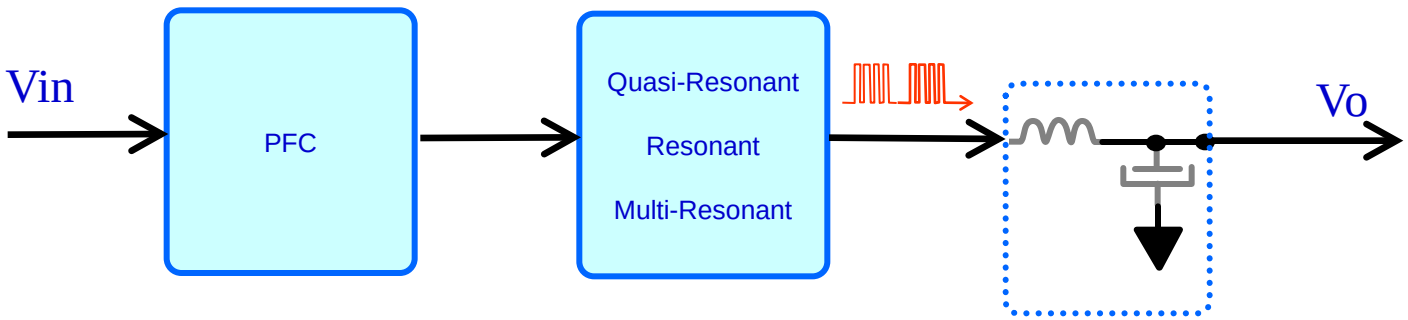

- The regulation may be done in train of pulses with a frequency in hundreds of KHz range. The PWM regulation is the same , the difference is that during the “on” time energy will be delivered at very high frequency.

PRESENT MAGNETIC LIMITATIONS

LEAKAGE & STRAY INDUCTANCE

HOW TO MINIMIZE THE LEAKAGE INDUCTANCE

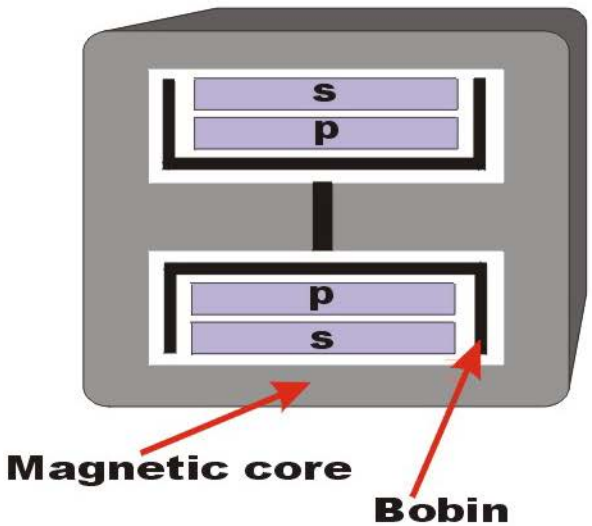

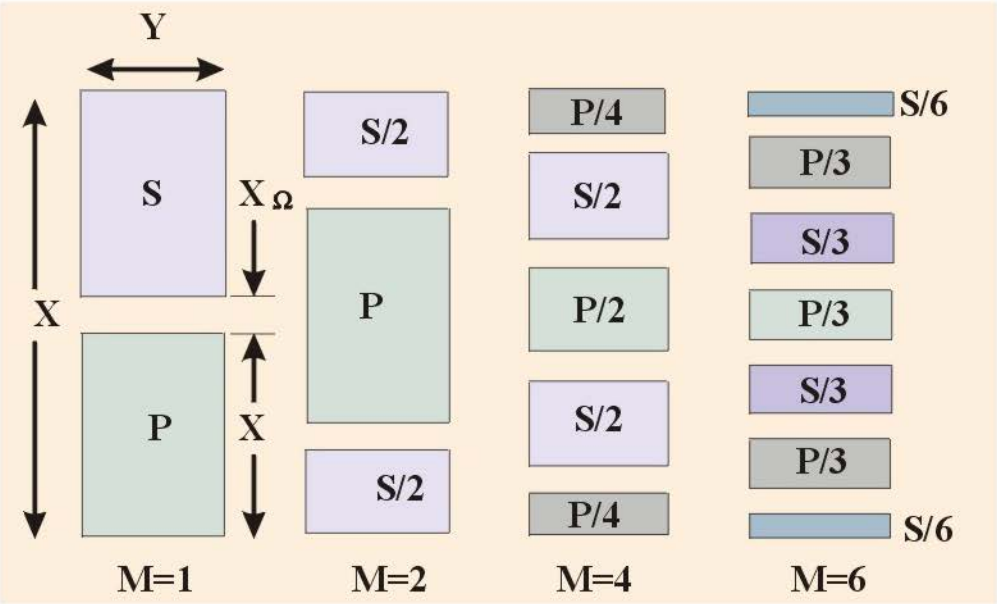

$$Llek = 4 \cdot \Pi \cdot 10^{-4} \frac{N^2 lw}{M^2 Y} \left(\frac{\Sigma x}{3} + \Sigma x \Delta \right)$$

[5]

TOP AND BOTTOM LAYERS OF THE 25W DC-DC FLYBACK CONVERTER

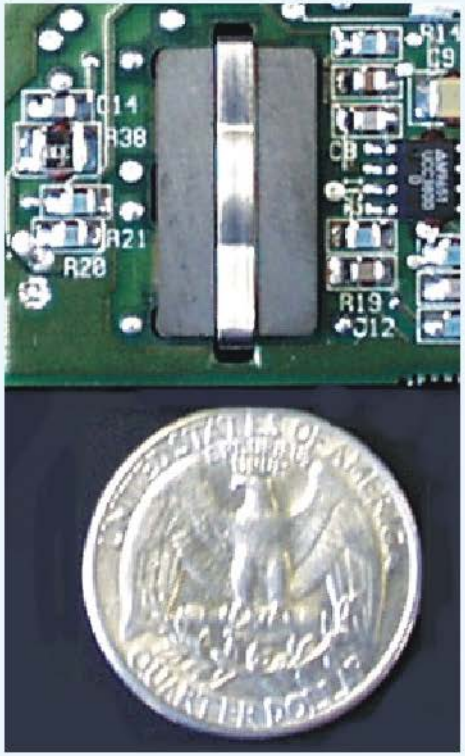

[7]

IMPLEMENTATION OF THE 25W DC-DC FLYBACK CONVERTER

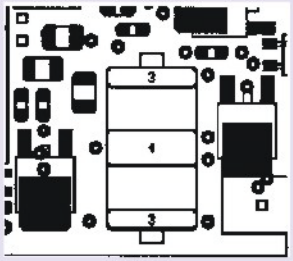

Layer 1: Components

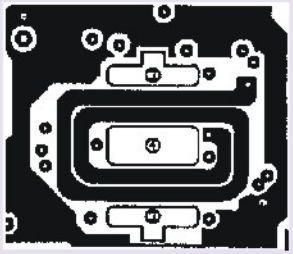

Layer 2: Secondary

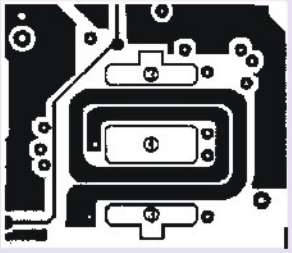

Layer 3: Primary

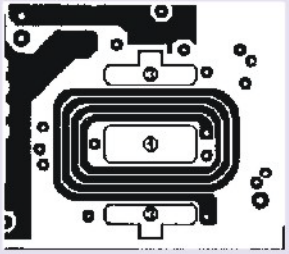

Layer 4: Secondary

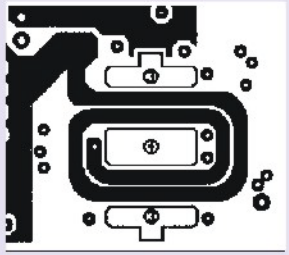

Layer 5: Primary

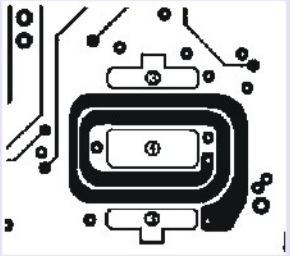

Layer 6: Secondary

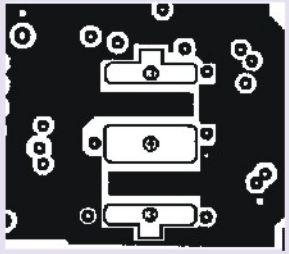

Layer 7: Shield

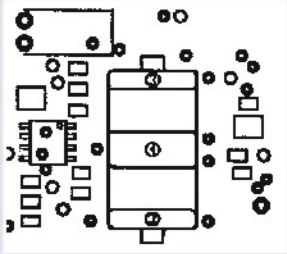

Layer 8: Components

[7]

EXPERIMENTAL WAVE FORMS OF THE 25W DC-DC FLYBACK CONVERTER

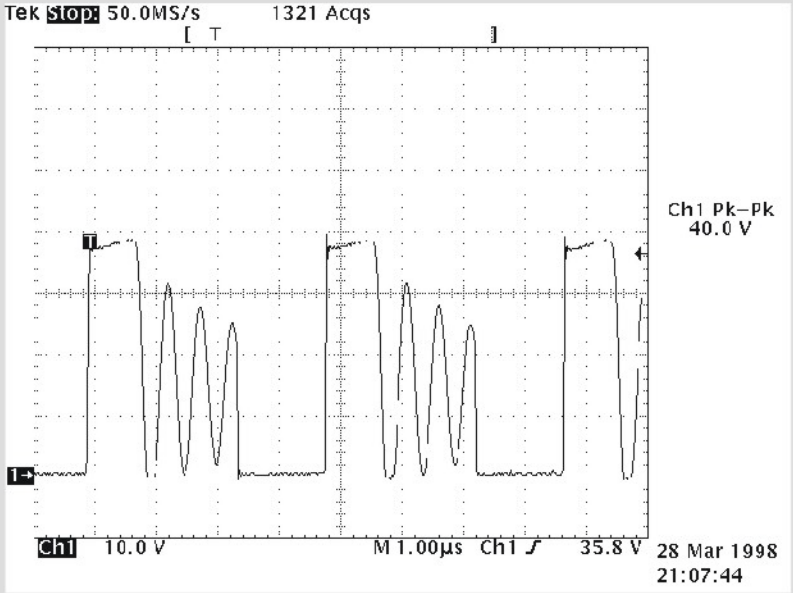

Voltage across Q1
Vin = 13.7V
Io = 0.2A

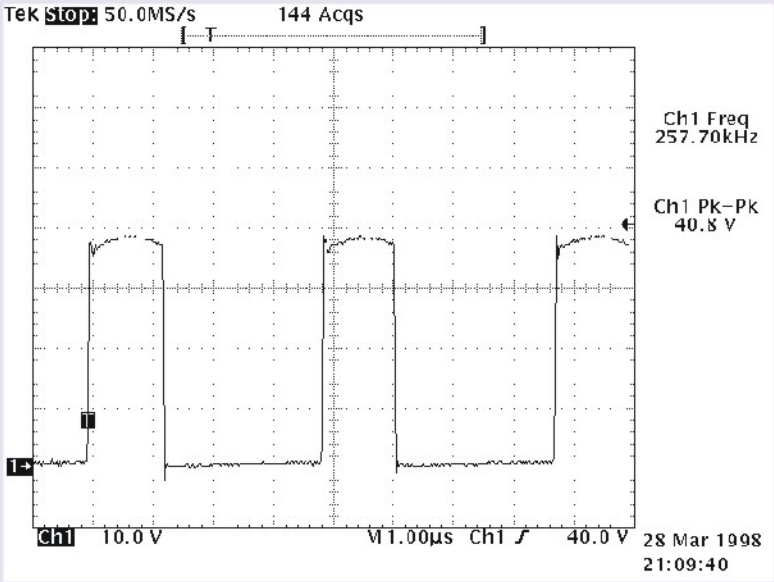

Voltage across Q1
Vin = 13.7V
Io = 0.6A

STRAY INDUCTANCE

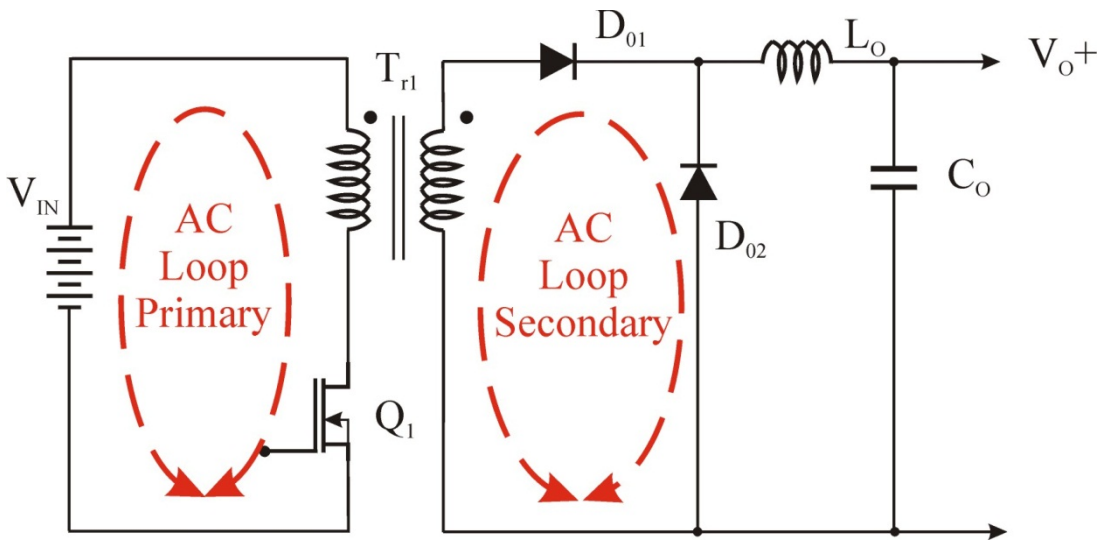

- THE STRAY INDUCTANCE ASSOCIATED WITH THE AC LOOP, PLAY A VERY IMPORTANT ROLE IN THE CONVERTER PERFORMANCE.
- THE EFFECT OF THE STRAY INDUCTANCE CAN BE STRONGER THAN THE EFFECT OF LEAKAGE INDUCTANCE.

THE IMPACT OF THE STRAY INDUCTANCE

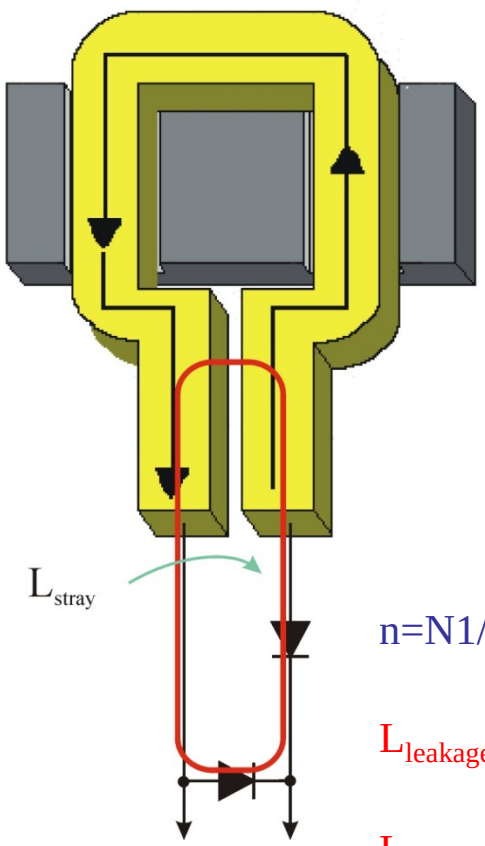

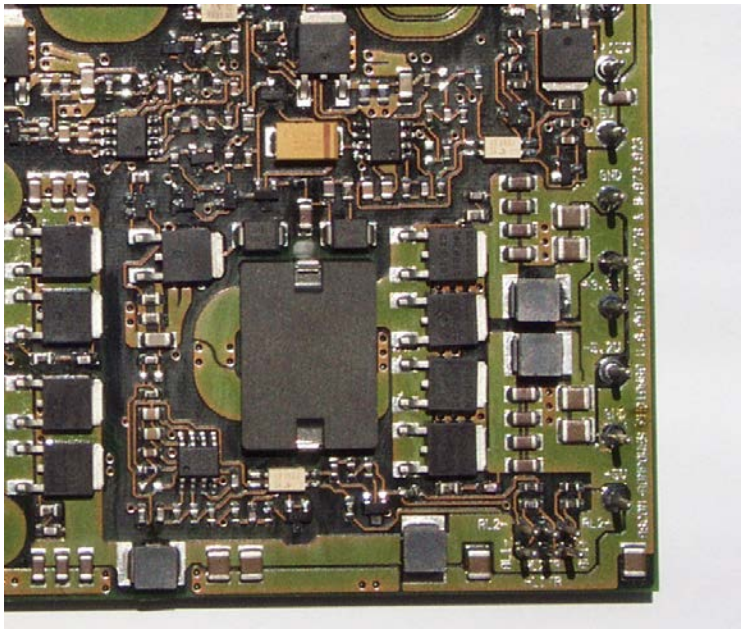

n=N1/N2=8:1 Leakage= 0.63uH L_{Stray}= 0.0088uH

$L_{leakage\_total} = L_{leakage} + n^2 * L_{Stray}$

$L_{leakage\_total}$= 1.2uH

MAGNETIC OPTIMIZATION AND ELIMINATION OF THE END EFFECTS

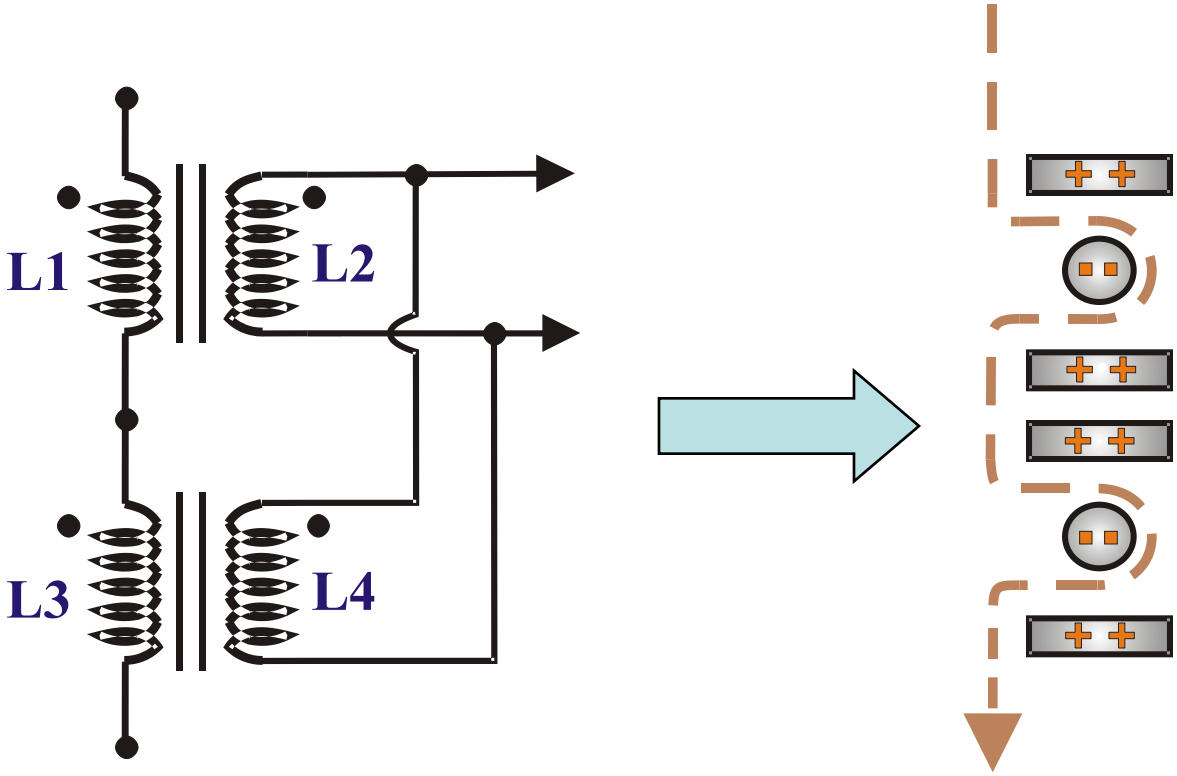
L1
L2
L3
L4

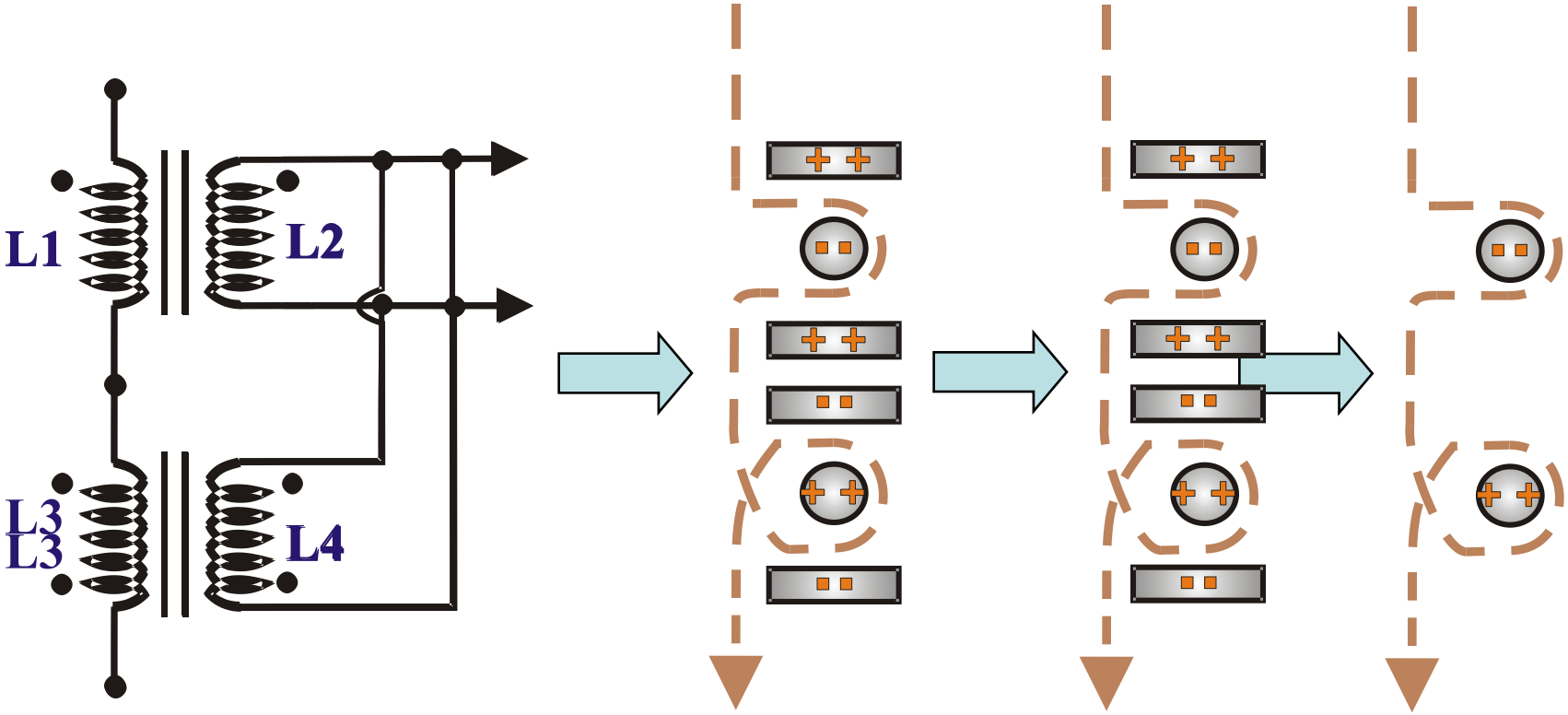

- Significant reduction of the footprint
- Reduction of the magnetic core volume

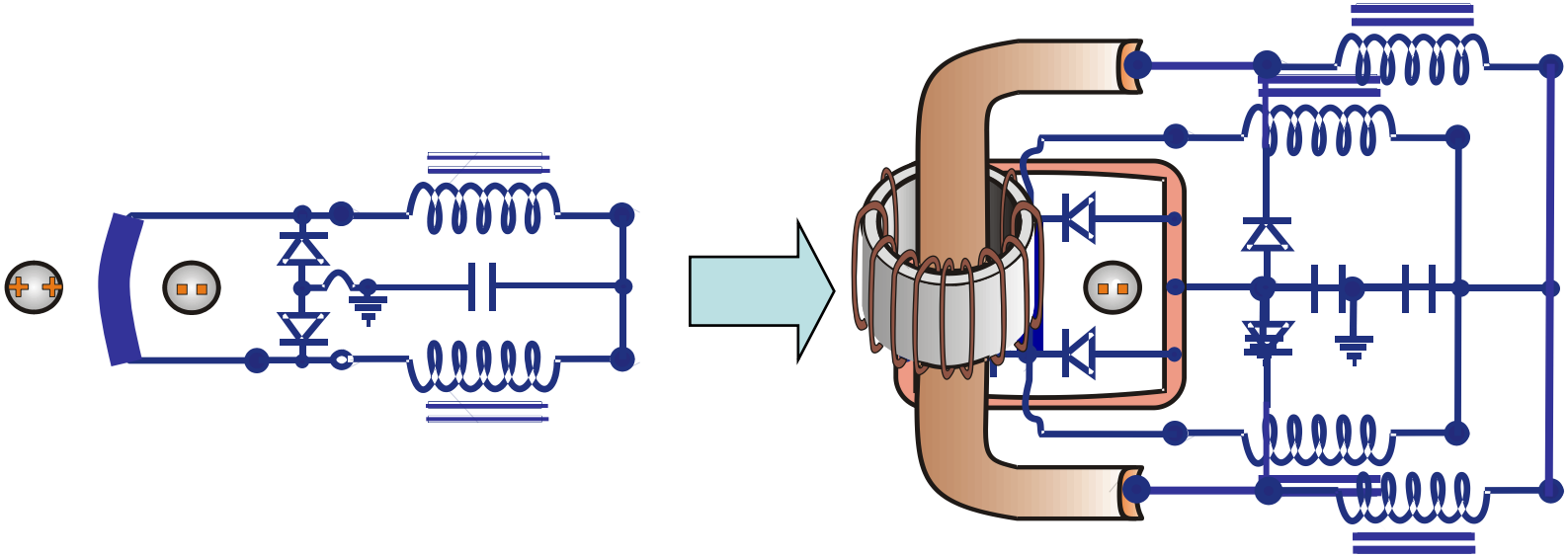

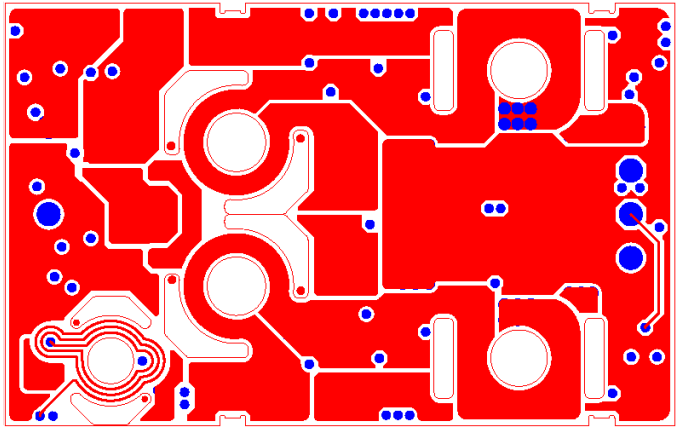

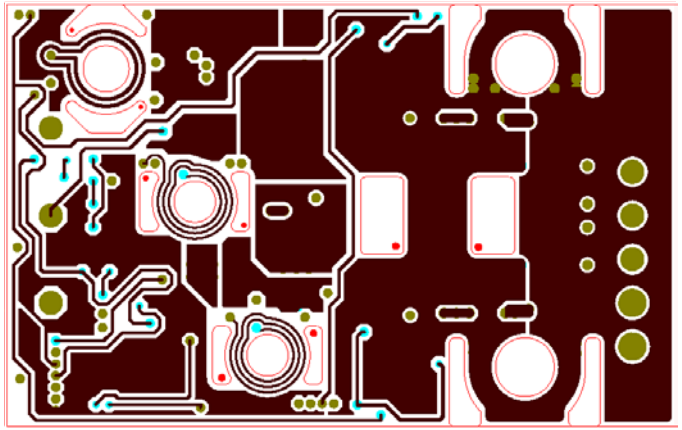

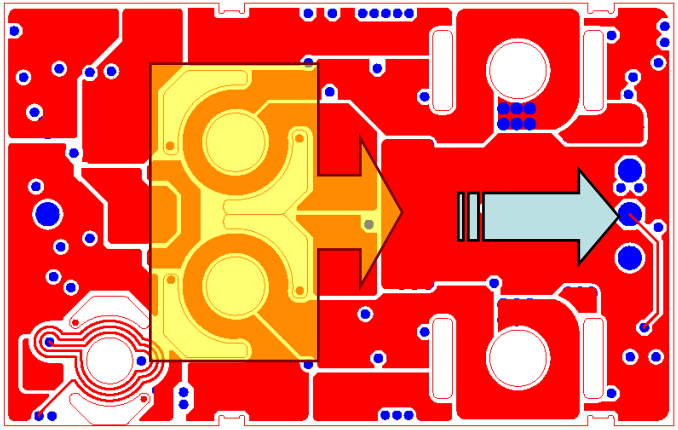

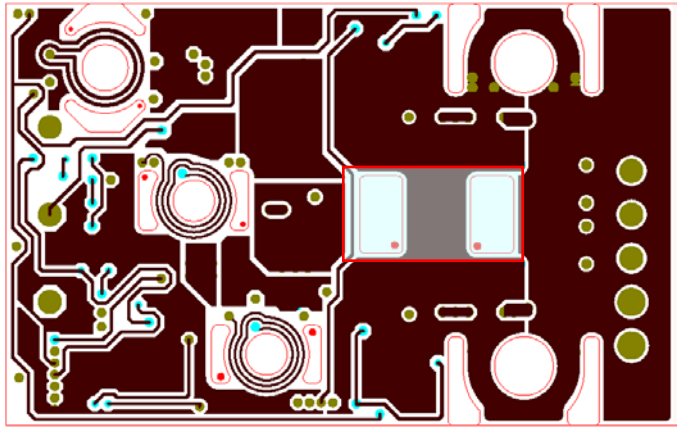

1V2/100A HC_QB

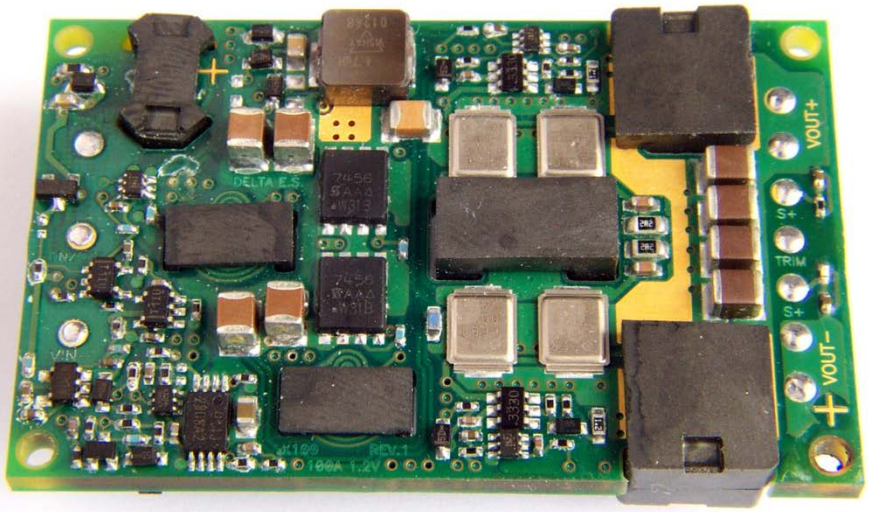

[7]

Winding Termination Effects

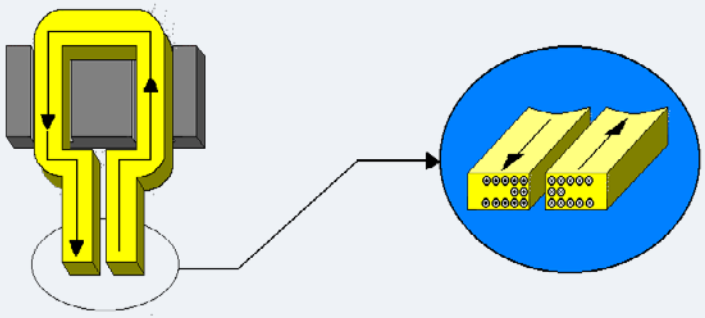

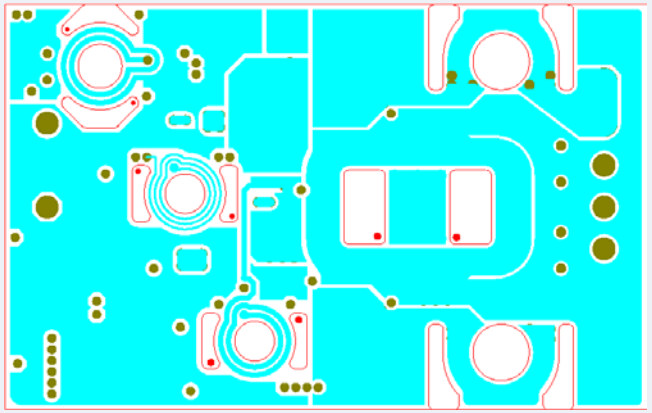

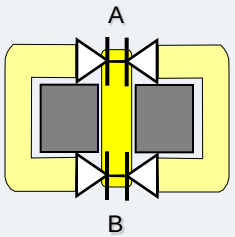

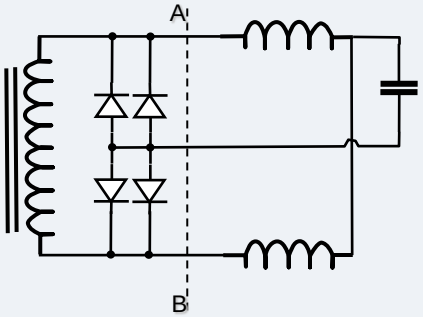

Winding Termination Effects

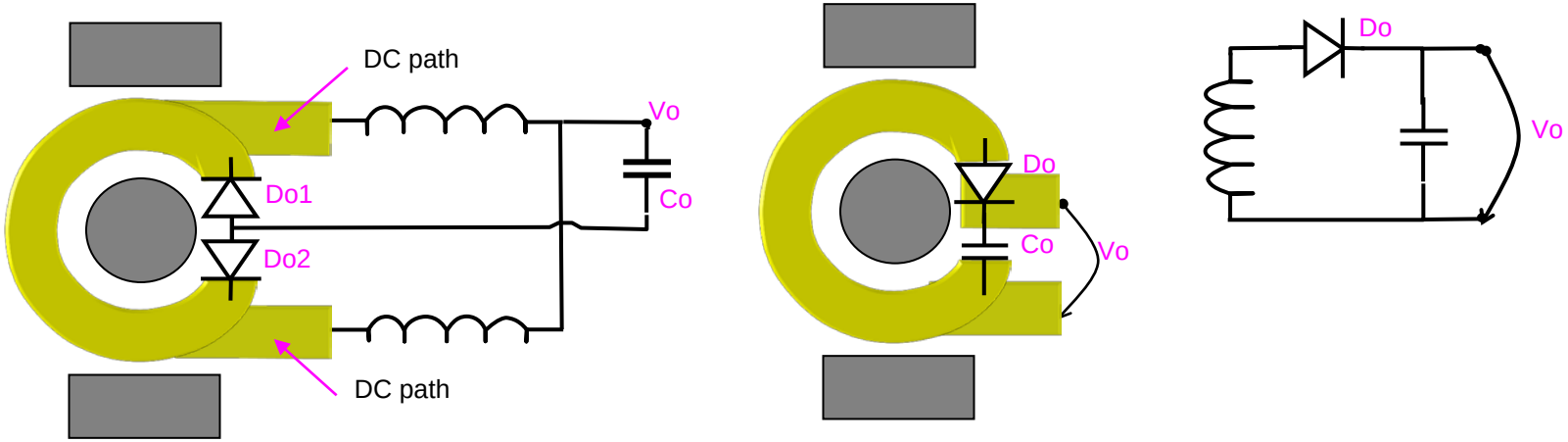

NEW FORM OF DISTRIBUTED MAGNETICS

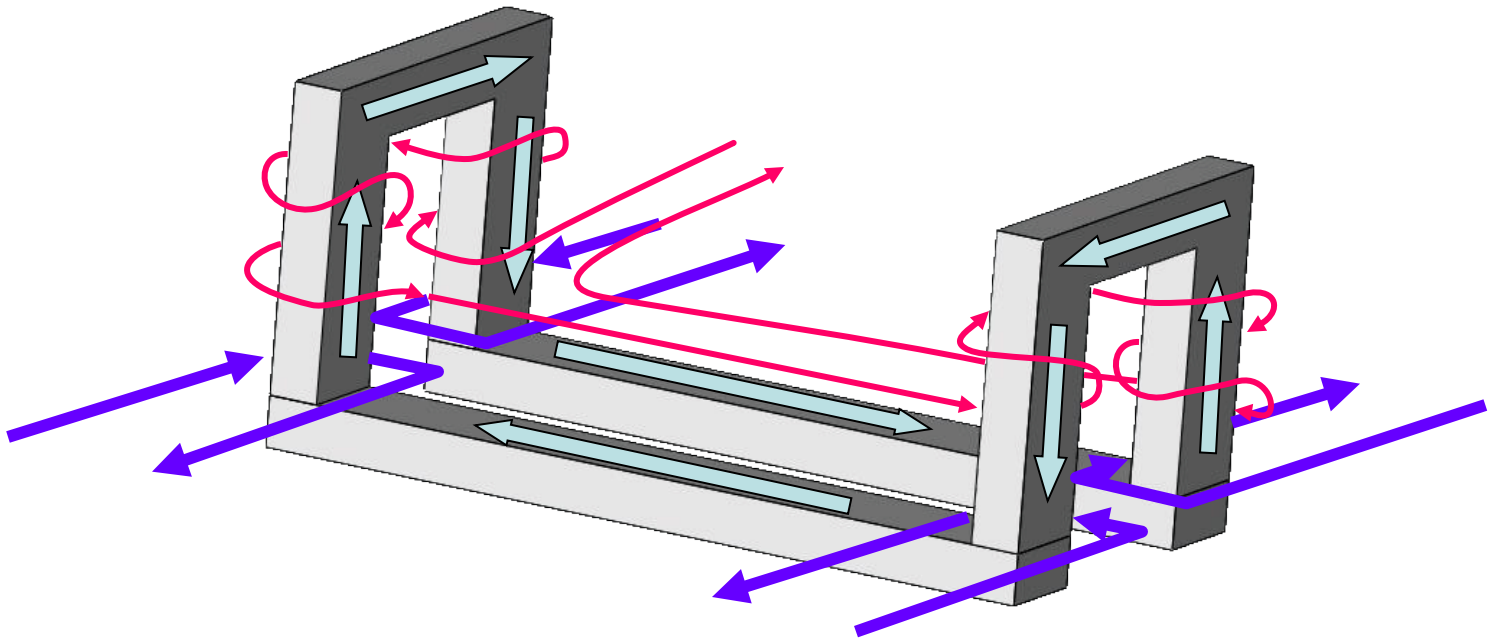

[3]

“N” WINDINGS CONCEPT 1/N TURNS

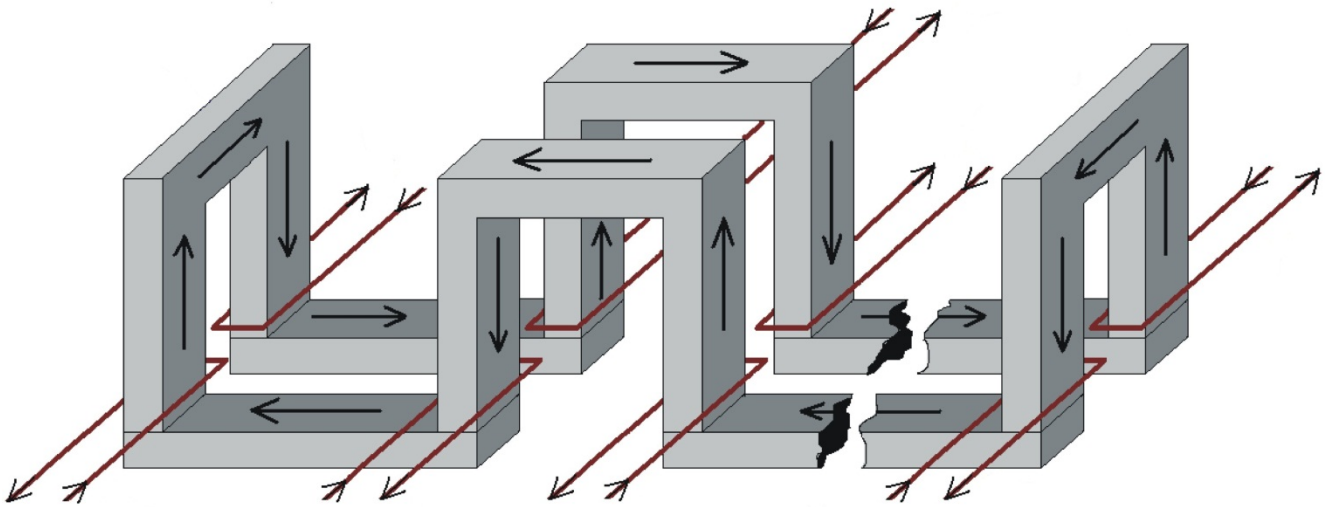

[3]

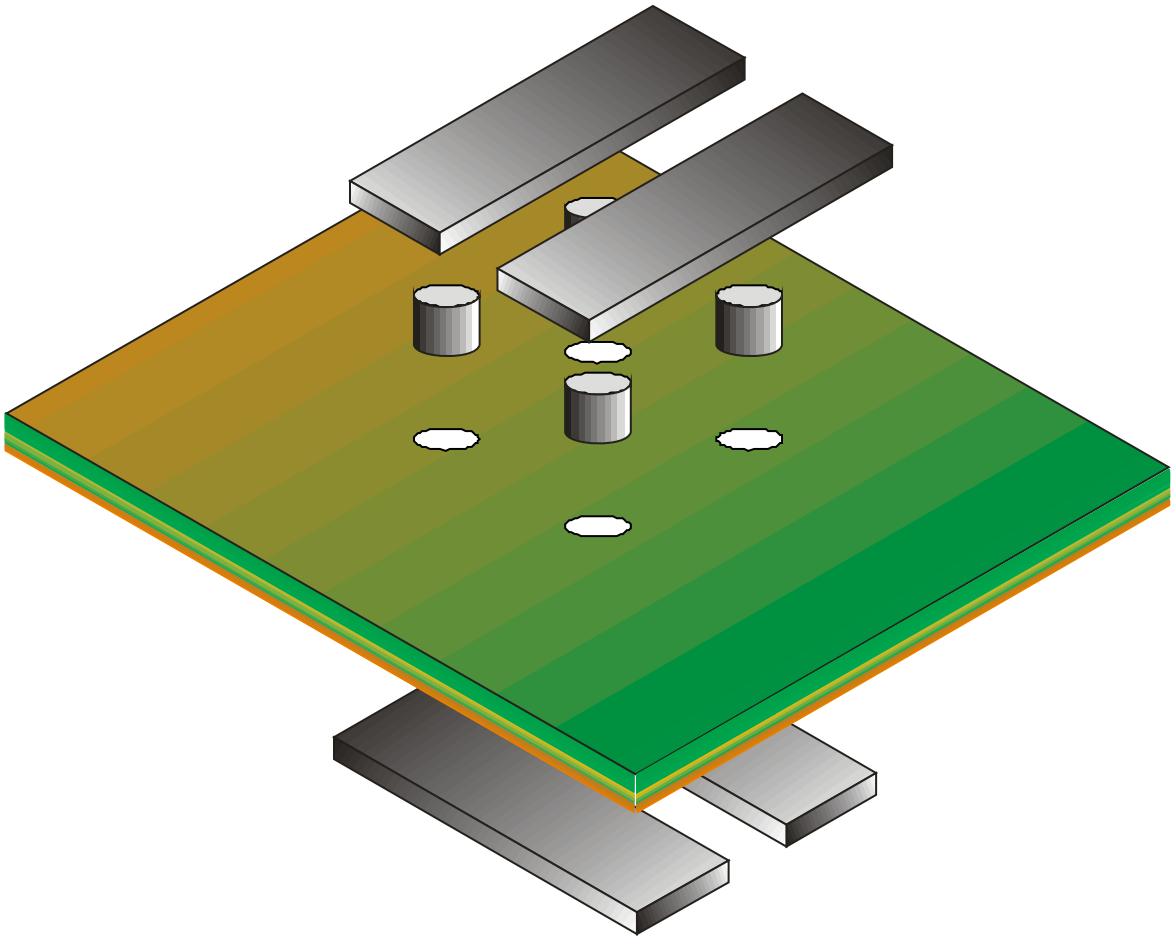

NEW FORM OF DISTRIBUTED MAGNETIC

[3]

ELECTRICAL EQUIVALENCY

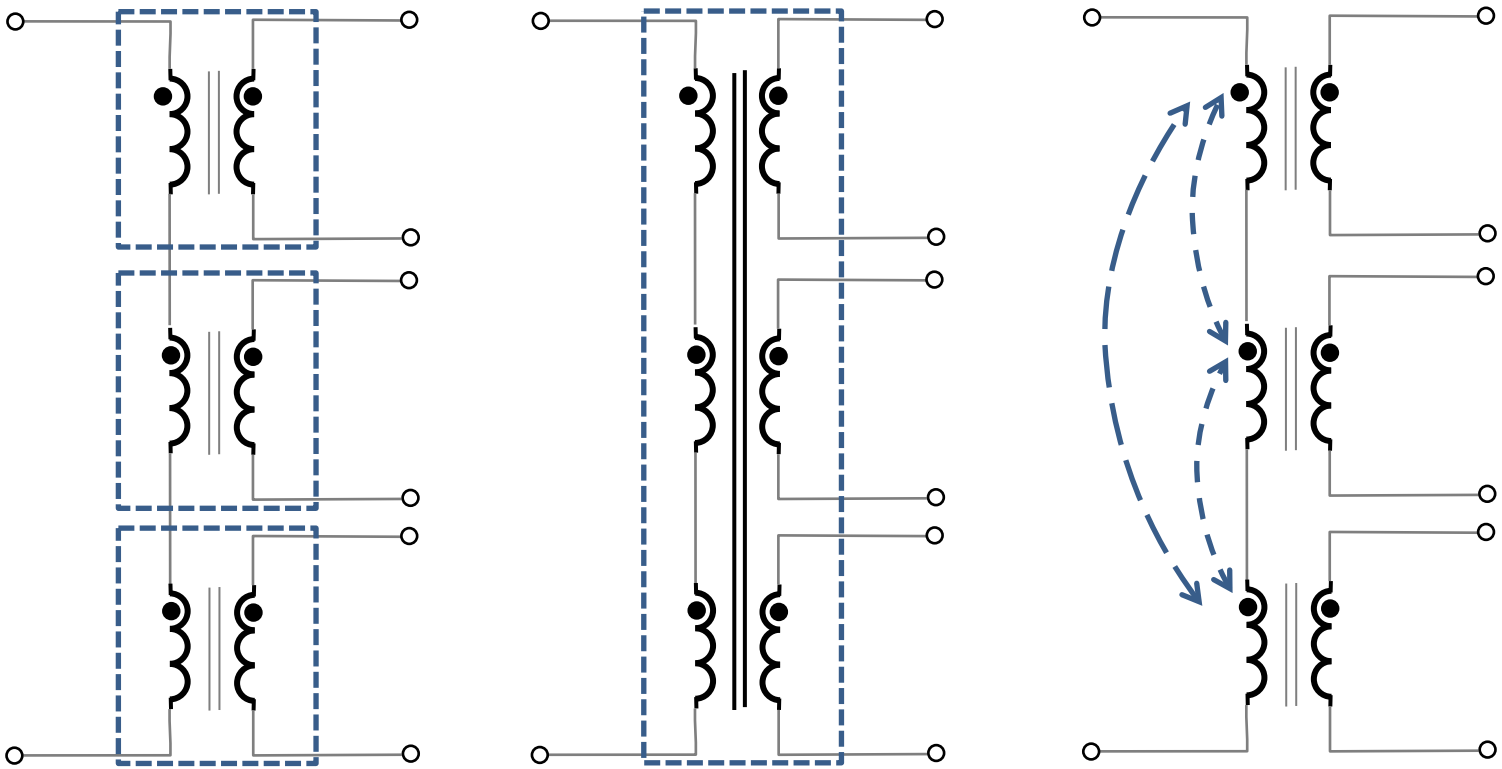

Magnetic Distribution Techniques

[9]

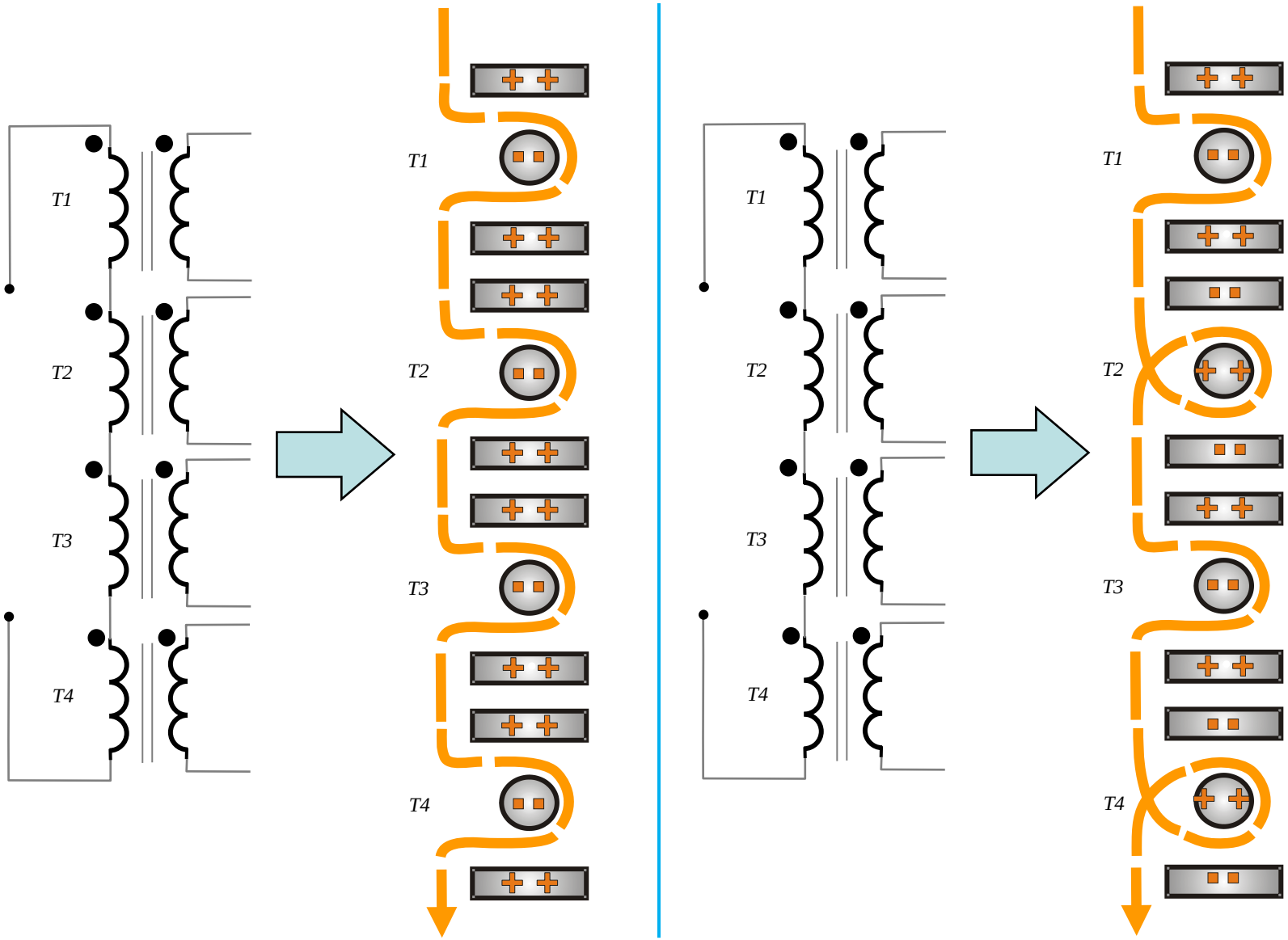

[9]

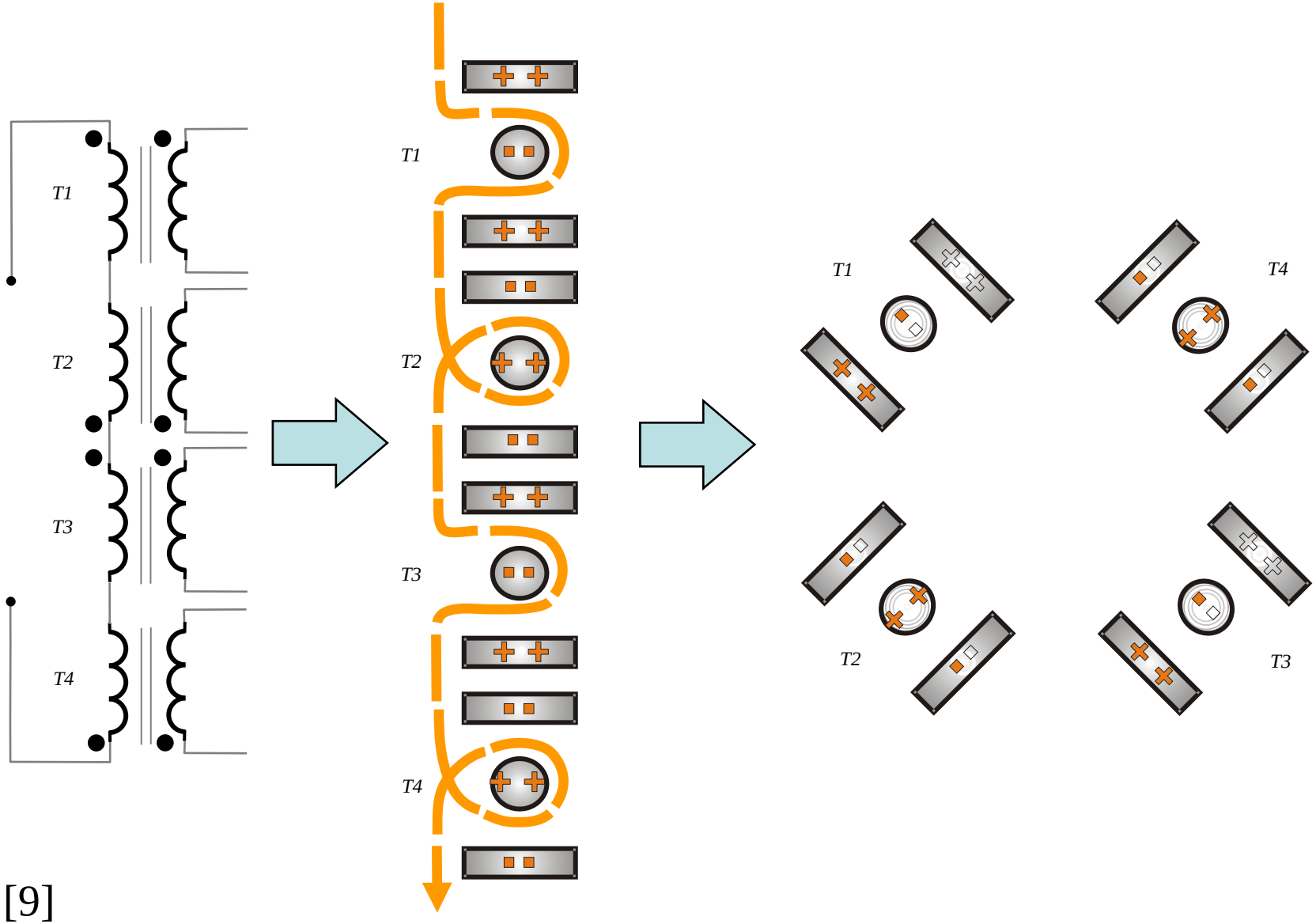

[9]

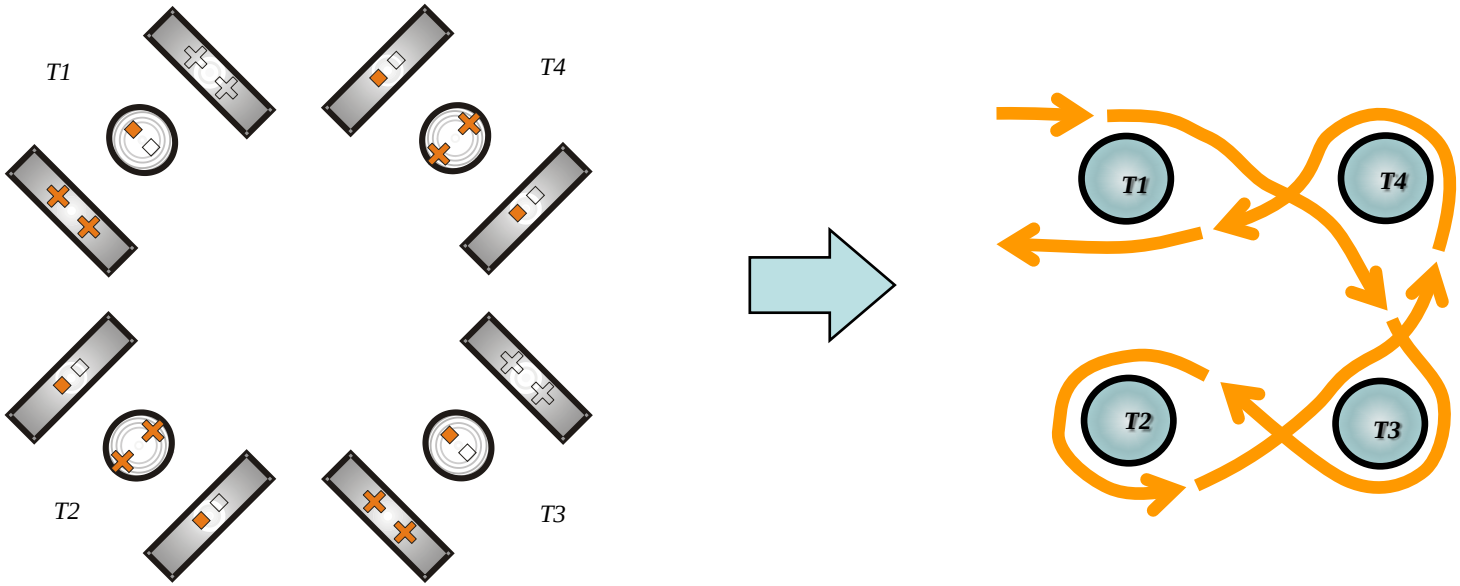

[9]

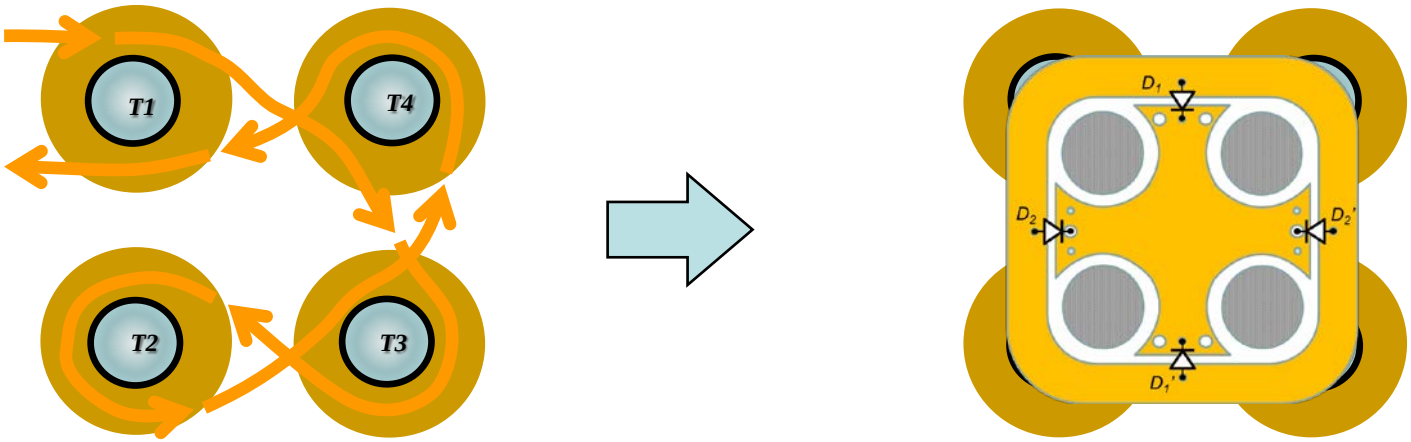

[9]

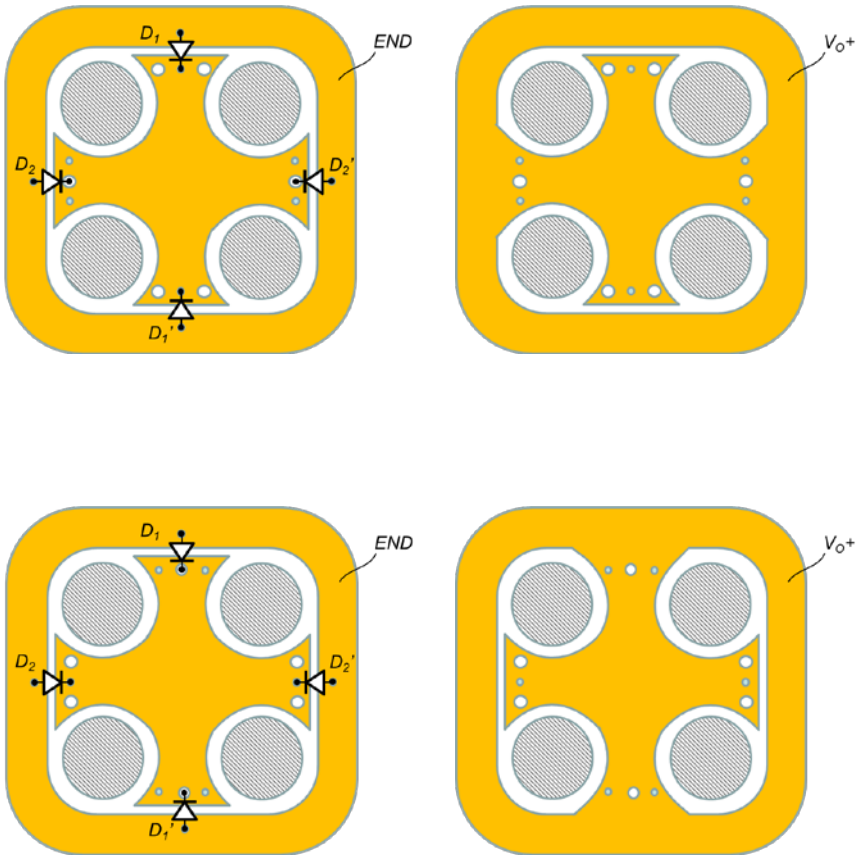

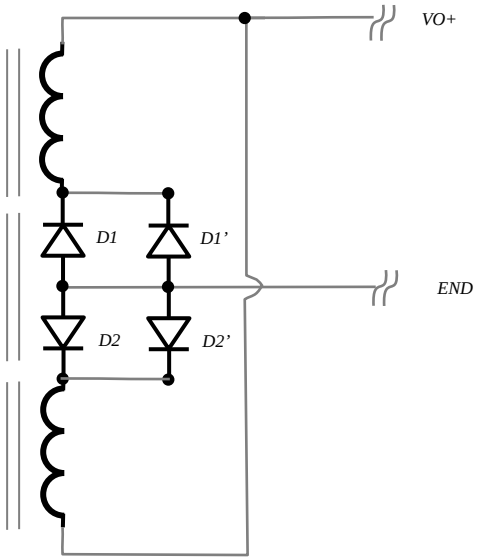

[9]

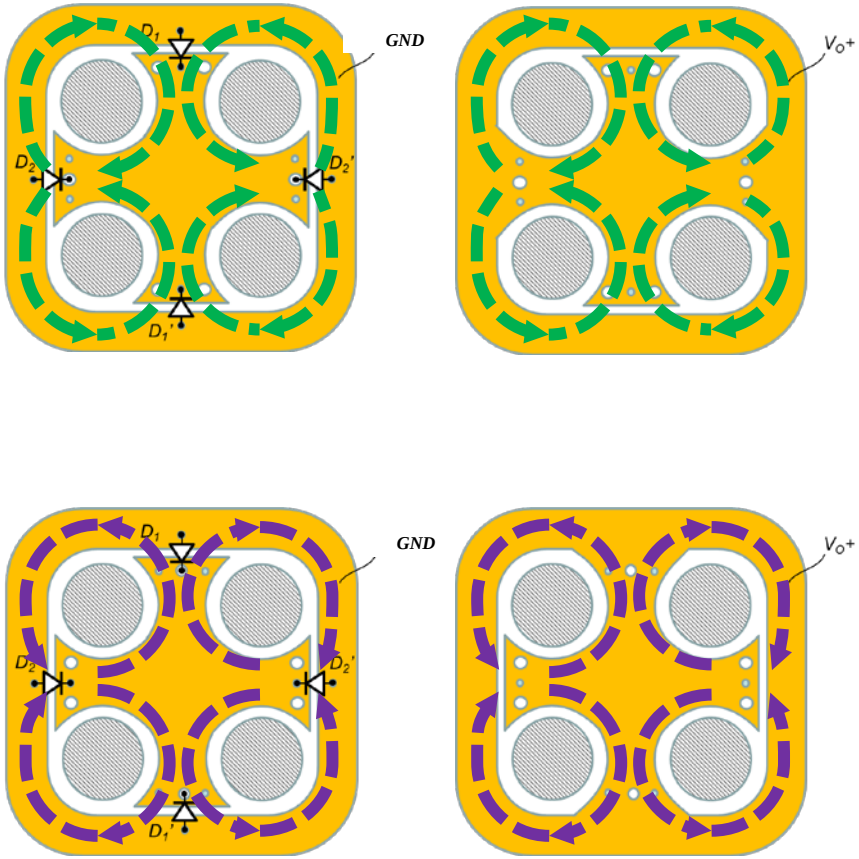

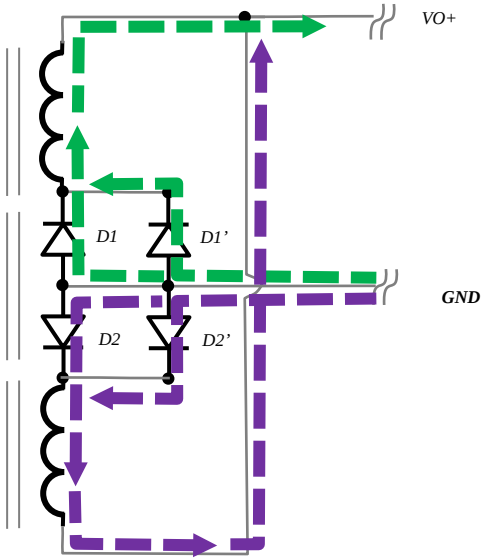

A NOVEL FORM OF DISTRIBUTED MAGNETIC

[9]

MAGNETIC STRUCTURES FOR HIGHER FREQUENCIES

Magnetic Structures for High Efficiency

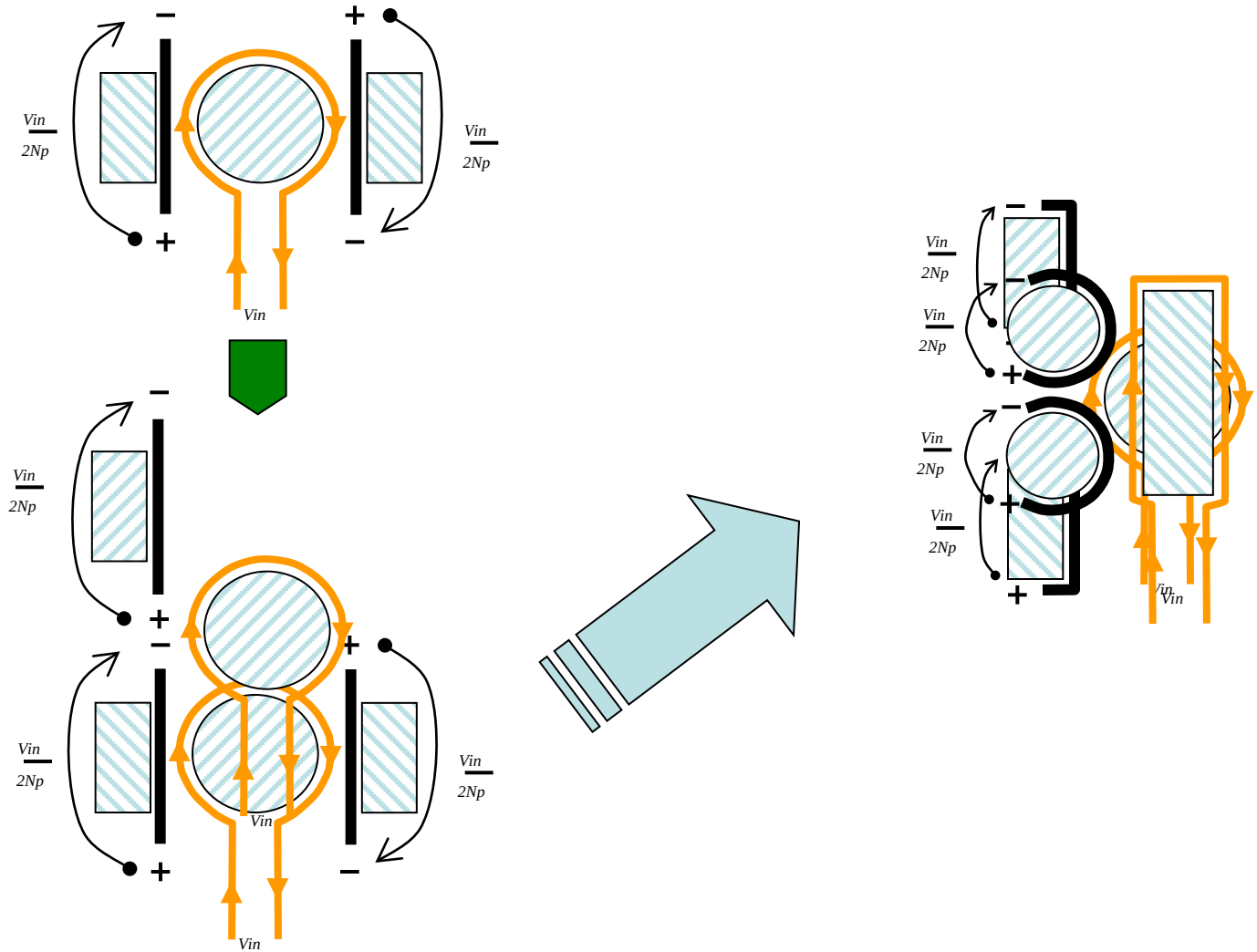

[1]

Magnetic Structures for High Efficiency

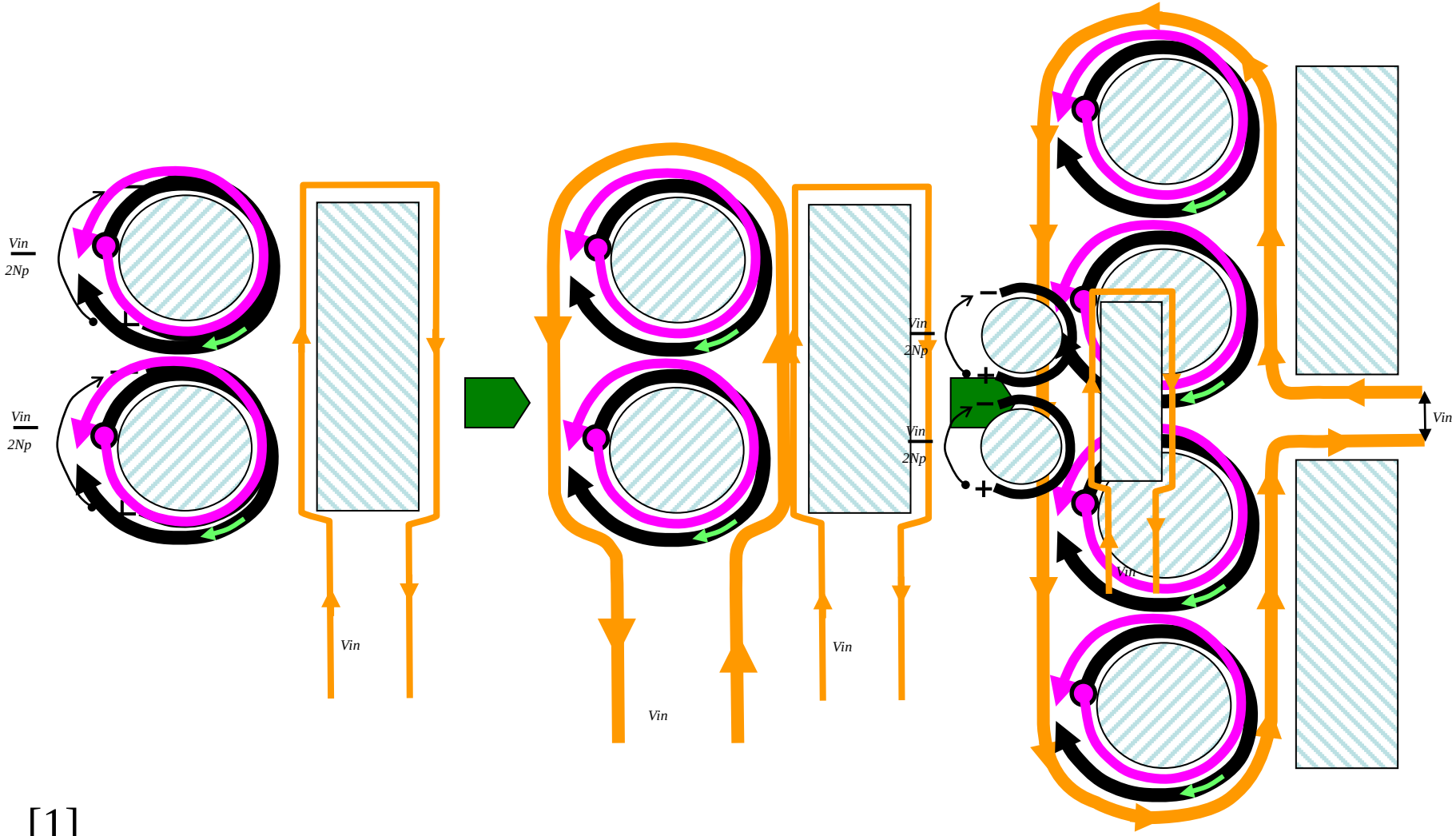

[1]

Printed Circuit Transformer

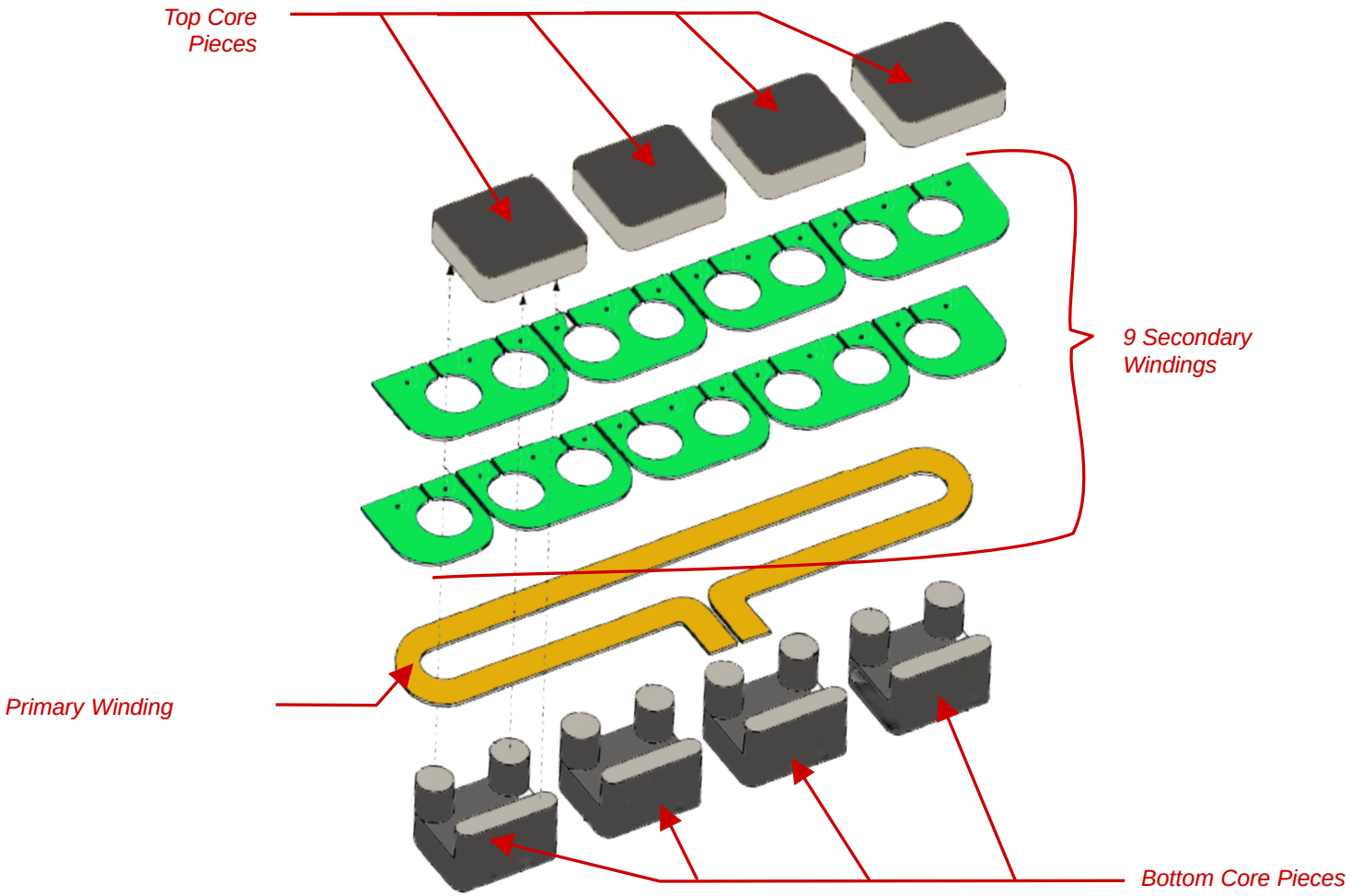

[1]

[14]

Magnetic Structures for Very High Frequency

Case	K[%]	1MHz P Ac/Dc	1MHz S Ac/Dc	10MHz P Ac/Dc	10MHz S Ac/Dc
1 Plates & Posts	99.9	2.26	3.26	3.75	4.54
2 No Core	54.8	2.2	2.63	3.58	3.57
3 Center Posts	72.9	1.72	1.93	3.05	2.61

1

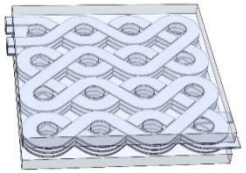

3

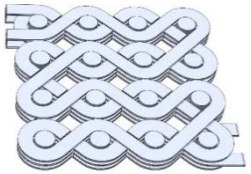

2

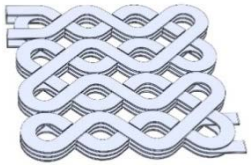

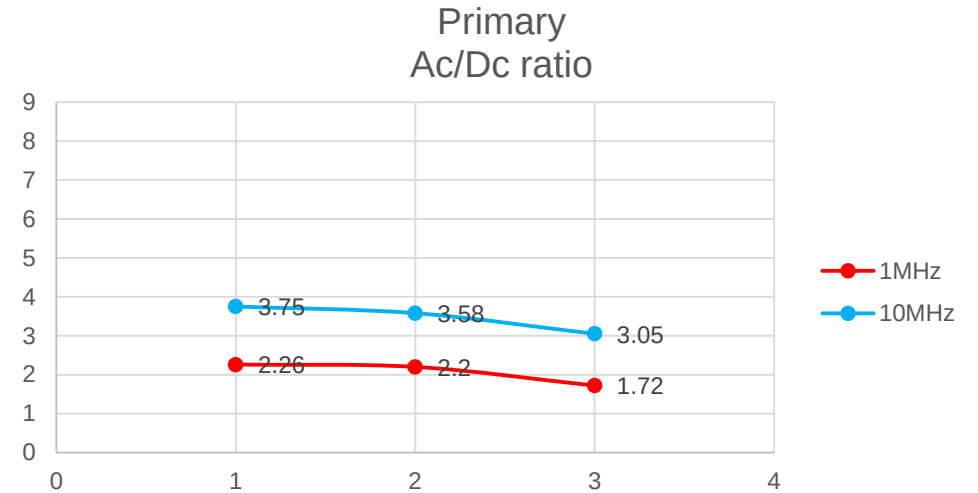

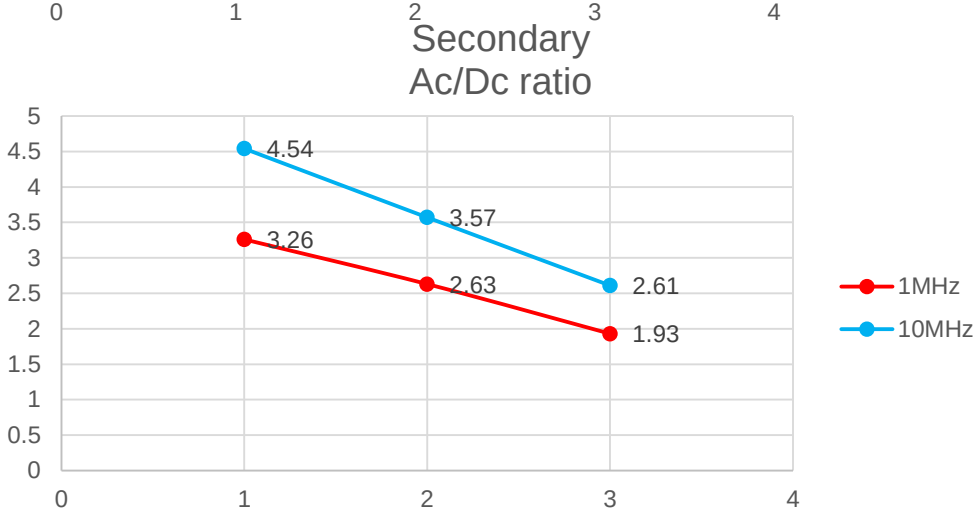

[9] MULTI-LEGGED MAGNETIC STRUCTURE

Rac/Rdc Characteristics

CONCLUSION

- The main target is efficiency and smaller size which may lead to lower cost.
- Reduction of number of turns towards one turn secondary.
- For efficiency and size minimization present “true” soft switching topologies operate between 300KHz towards 1MHz with new semiconductor technologies.
- The new semiconductor technologies allows operation above 5Mhz but it may require high efficiency air core magnetic structures.

Thanks!

References

[1] PatrizioVinciarelli “ Printed Circuit Transformer” US Patent # 7,187,263 B2
[2] Jiankun Hu, C.R. Sullivan “AC Resistance of Planar Power Inductors and the Quasidistributed Gap Technique” IEEE Transactions on Power Electronics, Vol 16,no 4,pp.558-567.
[3] Ionel Dan Jitaru “Low Profile Magnetic Element”" US Patent # 7,295,094 B2
[4] Ionel Dan Jitaru “Planar Inductive Element”" US Patent # 6,967,553 B2
[5] E.C. Snelling, “Soft Ferrites,Properties and Applications" pp.335-338
[7] Ionel Dan Jitaru "Low Noise Full-Integrated Multilayer Magnetic for Power Converters" US Patent 5,990,776
[8] Ionel Jitaru “ Soft Switching Converter by Steering the Magnetizing Current” US Patent Pending
[9] Ionel Jitaru “Magnetic Structures for Low Leakage Inductance for Low Leakage Inductance and Very High Efficiency” US Patent Pending” US Patent Pending

Some of the technologies presented in this seminar may be the subject of patent applications, please contact Rompower Energy Systems for further details.