Approved, DCN# 43-5296-19

Modeling Conducted EMI in Power Electronic Systems

Aaron Brovont

Assistant Professor
Electrical and Computer Engineering
abrovont@ua.edu

THE UNIVERSITY OF ALABAMA®

Contributors & Collaborators

UNIVERSITY of WISCONSIN UWMILWAUKEE

Dr. Rob Cuzner

PURDUE UNIVERSITY

Dr. Steven Pekarek

MISSISSIPPI STATE UNIVERSITY

Dr. Seungdeog Choi
Mr. Mark Didat

UNC CHARLOTTE

Dr. Mike Mazzola
Mr. Jim Gafford

THE UNIVERSITY OF ALABAMA
THE CAPSTONE OF HIGHER EDUCATION

Dr. Andy Lemmon
Dr. Aaron Brovont

Outline

- Background on electromagnetic compatibility (EMC)
- Conducted emissions testing
- Common-mode (and differential-mode) modeling tutorial
- Application and validation in UA EMI testbed
- Study of leakage current through multi-chip power module (MCPM) baseplate

The paradigm shift in power systems due to power electronics makes EMC critical to design.

Ideal, 3-phase 60-Hz voltage supply

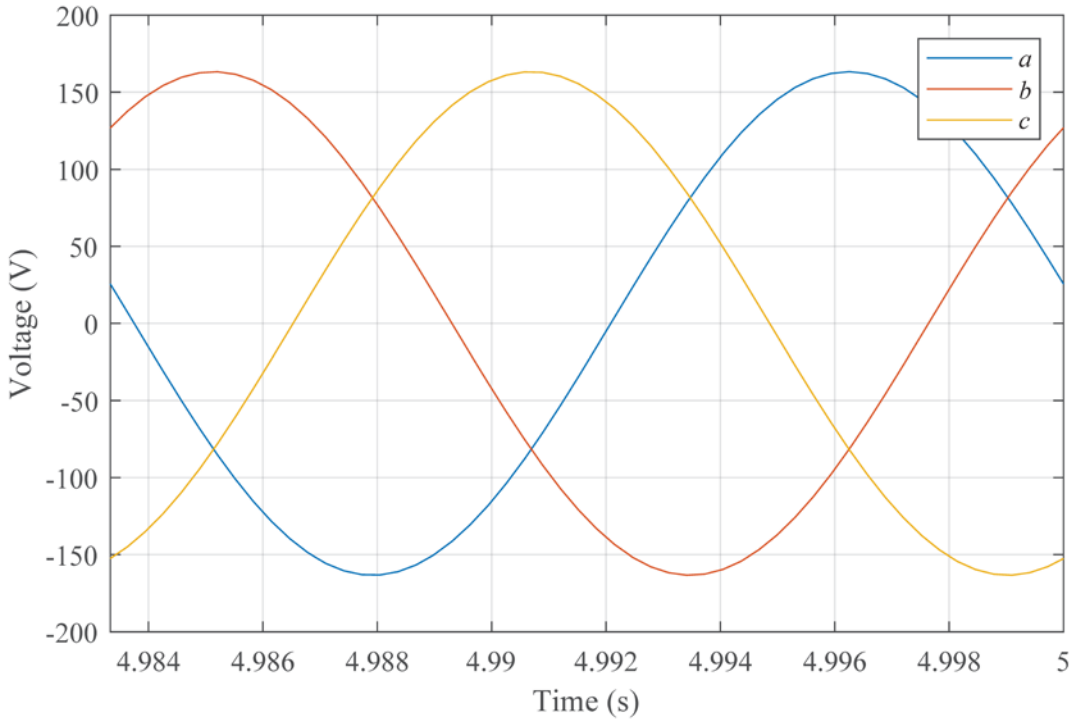

Two-level, VSI phase-to-neutral output

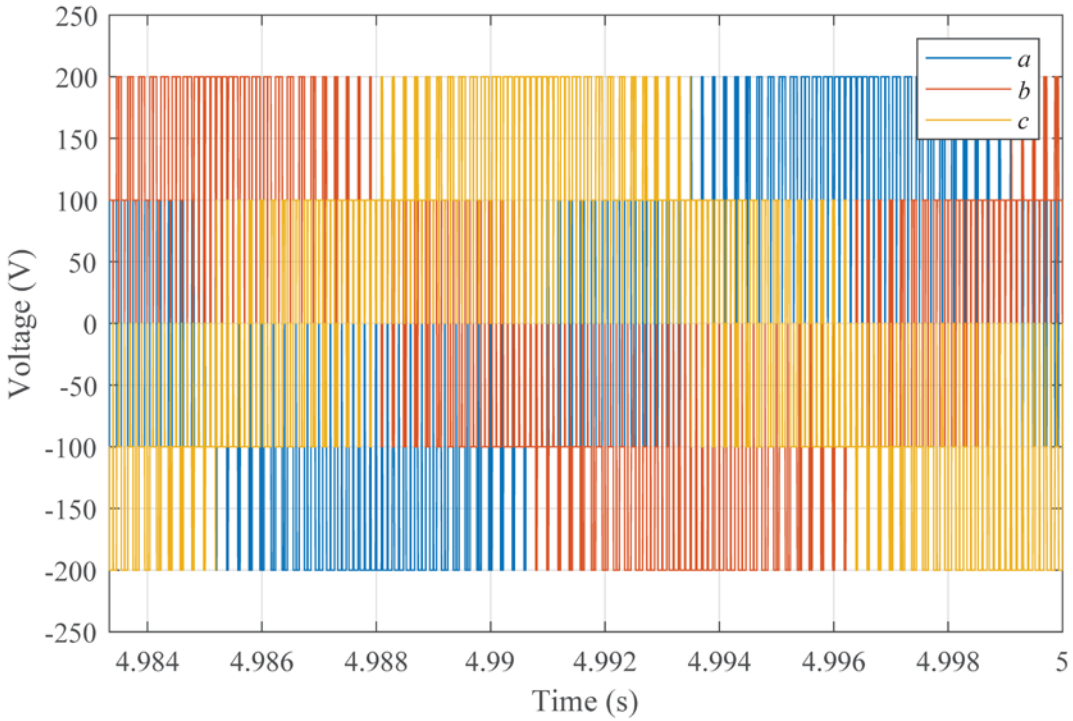

Present trends in power electronics likely to worsen EMI.

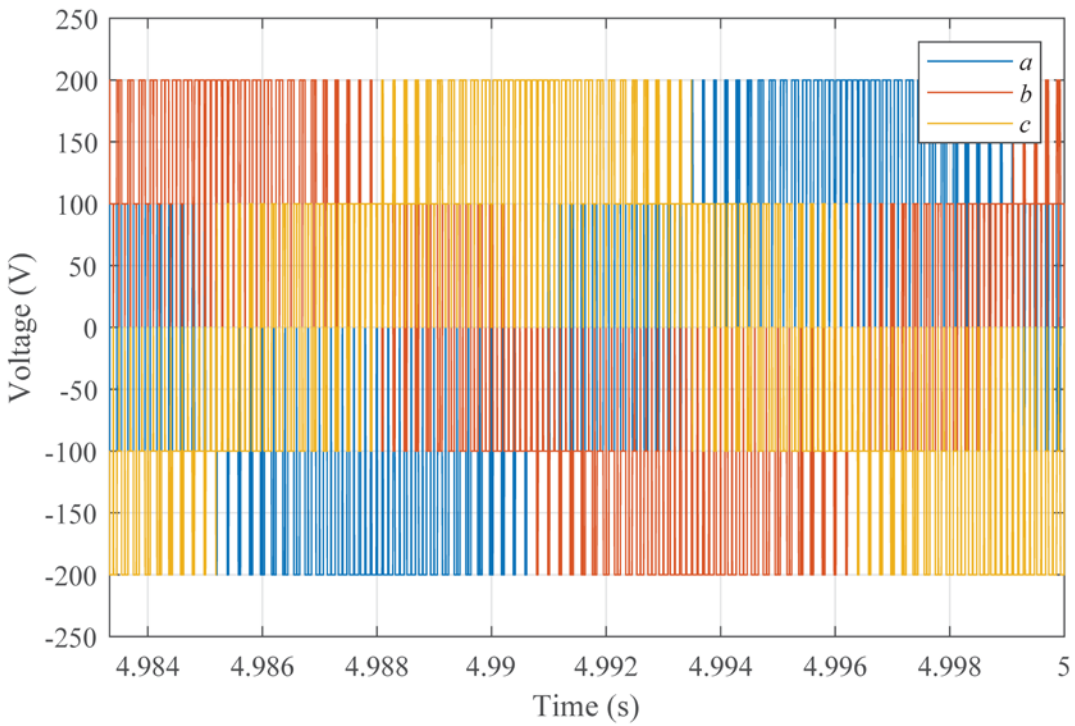

- Maturation of wide-bandgap devices
- Drive for increased efficiency and/or power density
- Increased penetration of renewables and power electronics applications
- Results: higher edge rates (d*v*/d*t*), switching frequencies, and voltage levels

What is electromagnetic compatibility?

- Concerned with the generation, transmission, and reception of electromagnetic energy
- A system is electromagnetically compatible if
  1. It does not cause interference in surrounding systems;
  2. It does not allow interference from surrounding systems;
  3. It does not cause interference with itself

Some basic EMC terminology

- Emissions, interference, and susceptibility
- Conducted emissions vs. radiated emissions
- Differential-mode vs. common-mode
- Electrical length: $\lambda = \frac{c}{f} \approx \frac{3 \times 10^8}{f}$
  - f = 300 kHz, λ = 1 km
  - f = 3 MHz, λ = 100 m
  - f = 30 MHz, λ = 10 m
  - f = 300 MHz, λ = 1 m
- Antennae are poor radiators of signals for which $\ell \ll \lambda$

Spectra of Modern Power Electronics

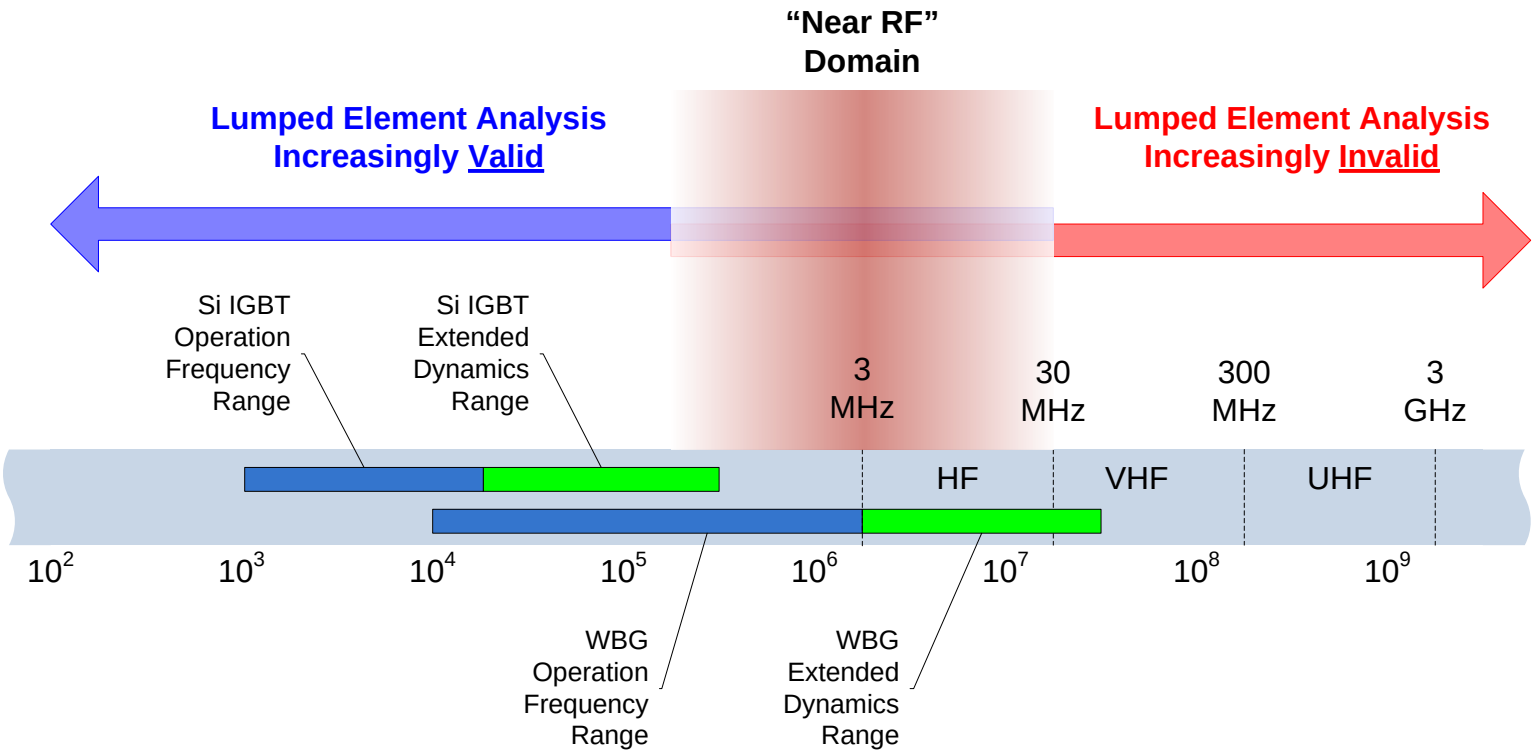

- Traditional IGBT-based systems:
  - Operation Frequencies to ~50 kHz
  - Easily-suppressed extended dynamics
  - Packaging impedances are not critically important
- WBG-based systems:
  - Operation Frequencies to a few MHz
  - Extended dynamics to ~50 MHz
  - Packaging impedances are critically important in "Near-RF" domain

A. N. Lemmon, R. Cuzner, J. Gafford, R. Hosseini, A. D. Brovont, and M. S. Mazzola, "Methodology for Characterization of Common-Mode Conducted Electromagnetic Emissions in Wide-Bandgap Converters for Ungrounded Shipboard Applications," IEEE J. Emerg. Sel. Topics Power Electron., vol. 6, no. 1, pp. 300–314, Mar. 2018.

Approach to EMI challenges in PE systems

- PE emissions primarily in conducted band (~10 kHz–30 MHz)
- Objective is to prevent emissions from reaching grid (large antenna)
- Three options: reduce susceptibility, make transmission inefficient, or eliminate source
- **Our Approach:** Employ modeling to minimize conducted emissions
  - Conducted emissions simpler and possible early in design
  - Reduces potential for radiated EMI

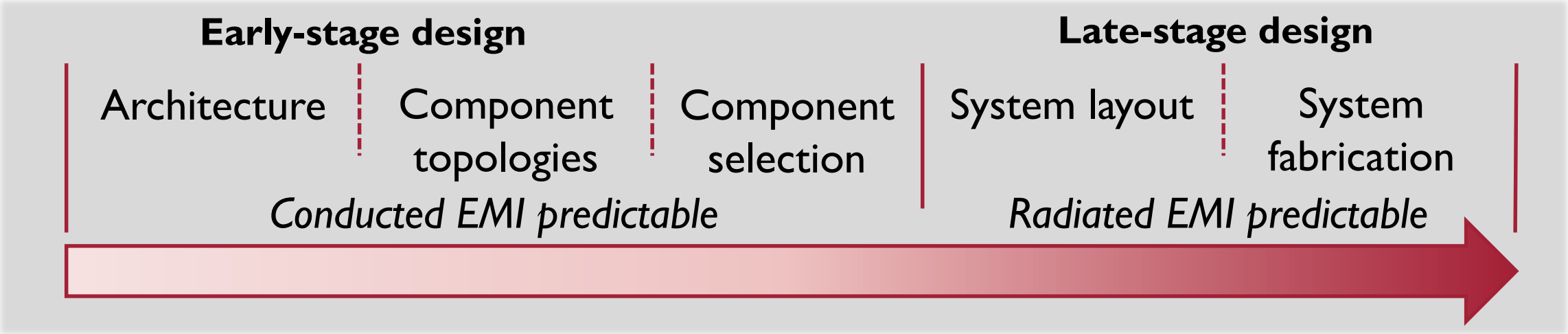

How do you measure conducted emissions?

- Line Impedance Stabilization Network‡:
  - Provide a standard source impedance for evaluating/measuring EUT emissions
  - Decouple source and EUT emissions
  - Typically modeled as 50 Ω to ground
- LISN only used on input side of EUT
- Commercial LISNs are not available for voltage levels > 1 kV
- Custom LISNs designed and built at UA

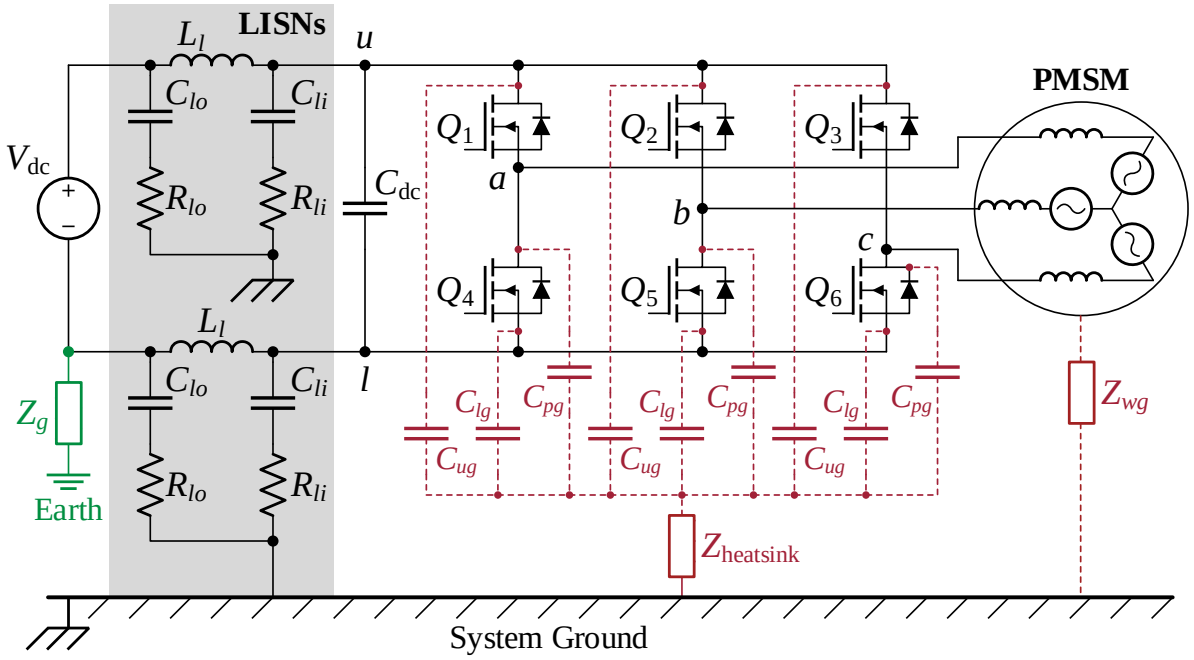

Fischer FCC-LISN-50-XXX LISN

‡ "DOD Interface Standard, Requirements for the control of electromagnetic interference characteristics of subsystems and equipment, Mil-Std-461G, 10 Mar. 2015.

Example: emissions from a machine-drive

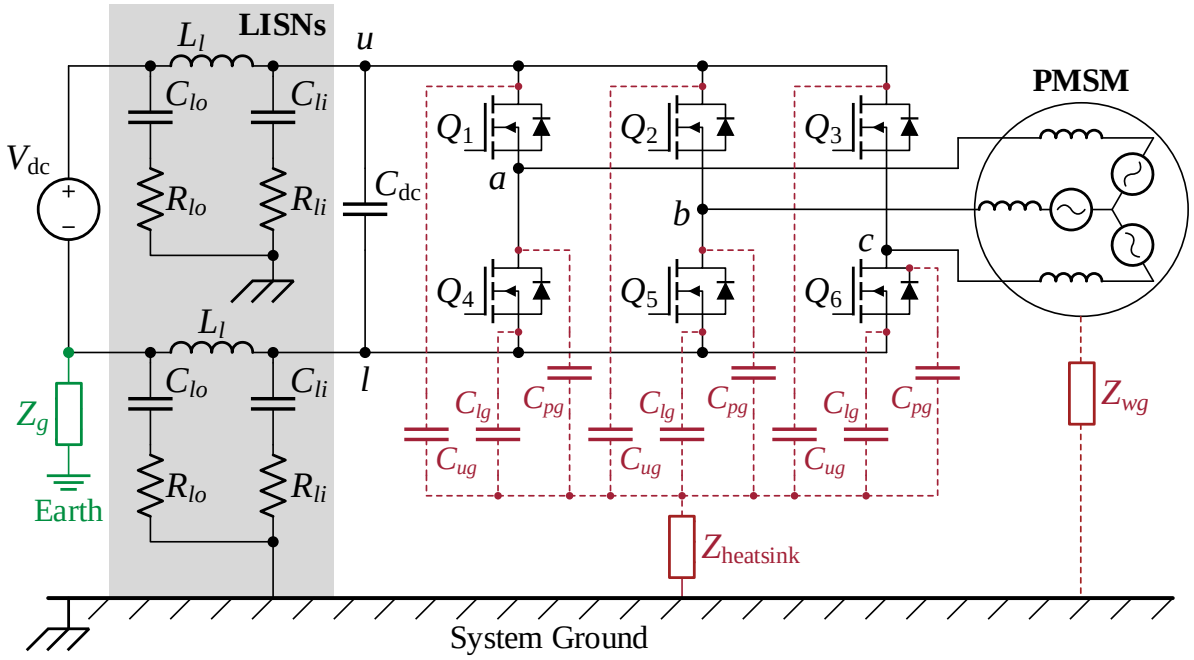

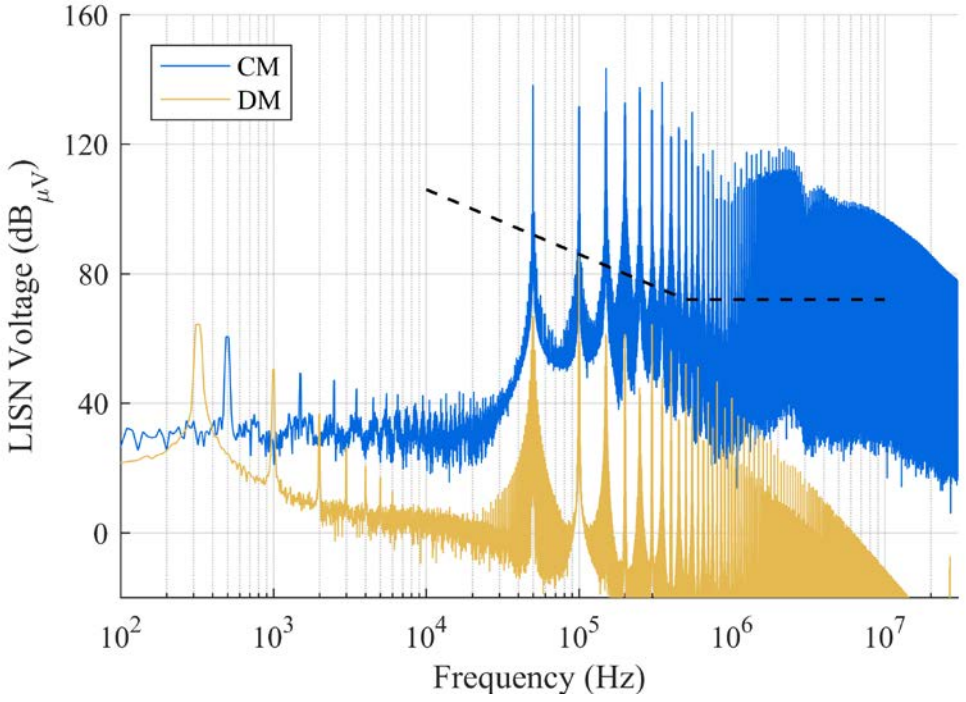

– Differential mode (DM):

$$v_{12} \triangleq v_{1P} - v_{2P}$$
$$i_{12} \triangleq \frac{1}{2}(i_1 - i_2)$$

– Common mode (CM):

$$v_{CM} \triangleq \frac{1}{2}(v_{1P} + v_{2P})$$
$$i_{CM} \triangleq i_1 + i_2$$

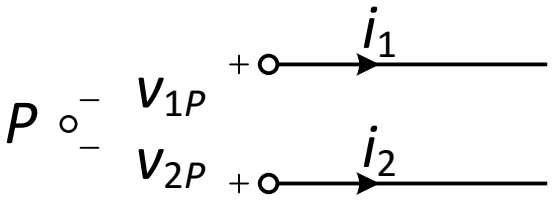

A. D. Brovont and A. N. Lemmon, "Utilization of Power Module Baseplate Capacitance for Common-Mode EMI Filter Reduction," *IEEE Electr. Ship Technol. Symp.*, 2019, submitted.

Fields from CM current are more likely to radiate and couple with nearby equipment

- Magnetic field accumulates

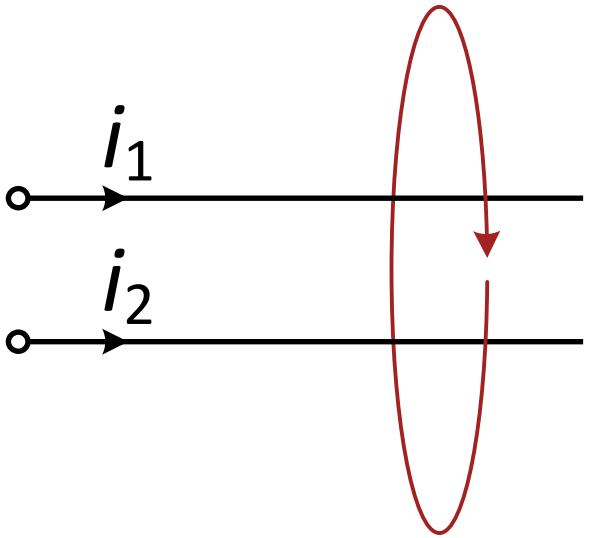

Fields fall off $\propto \frac{1}{r}$ for long wires

- Magnetic field cancels

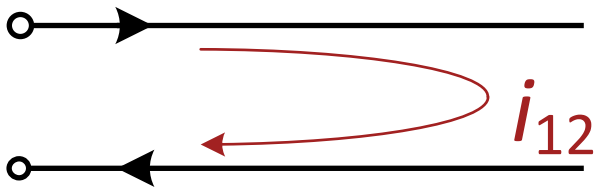

Fields fall off $\propto \frac{1}{r^2}$ for long wires

The many faces of the "Common Mode"

- Bearing currents and shaft voltages
  - Cause premature bearing failure in electric machines with VFDs
  - Shock hazard and voltage stress on insulation
- Leakage currents
  - Unintended ground currents typically through capacitive couplings with chassis and heat sinks
  - Interference with low-power electronics
- Circulating currents
  - Steady-state current flow between paralleled converters
  - Can be large and low-frequency, down to DC
  - Lossy, can cause instability, and unbalanced power sharing

Approved, DCN# 43-5296-19

DIFFERENTIAL-MODE AND COMMON-MODE EQUIVALENT CIRCUIT MODELING

Approved, DCN# 43-5296-19

Objectives of modeling conducted EMI

- Analytically predict parasitic/undesirable behavior of power electronic systems
- Inform/guide measurements to support modeling and analysis
- Predict the impact of new technologies (e.g., WBG devices)
- Evaluate methods to mitigate EMI and CM current through design

Modified definition for CM voltage enables rigorous & flexible model generation

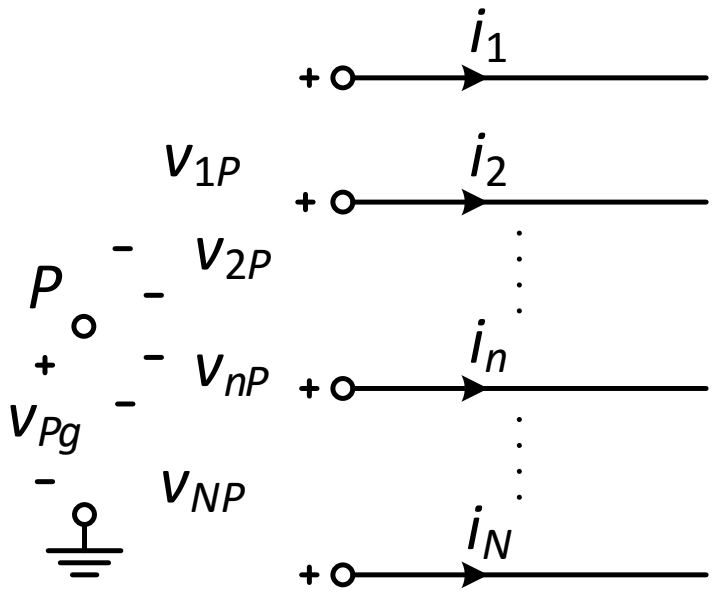

P is **arbitrary**

Common Mode

$$v_{\mathrm{CM}} \triangleq \frac{1}{N}\sum_{n=1}^{N} v_{nP}$$

$$i_{\mathrm{CM}} \triangleq \sum_{n=1}^{N} i_n$$

Differential Mode

$$v_{mn} \triangleq v_{mP} - v_{nP}$$

$$i_{mn} \triangleq \frac{1}{2}\left(i_m - i_n\right)$$

A. D. Brovont, "Generalized Differential-Common-Mode Decomposition for Modeling Conducted Emissions in Asymmetric Power Electronic Systems," *IEEE Trans. Power Electron.*, vol. 33, no. 8, pp. 6461-6466, Aug. 2018.

DM and CM definitions can be viewed generally as a space transformation

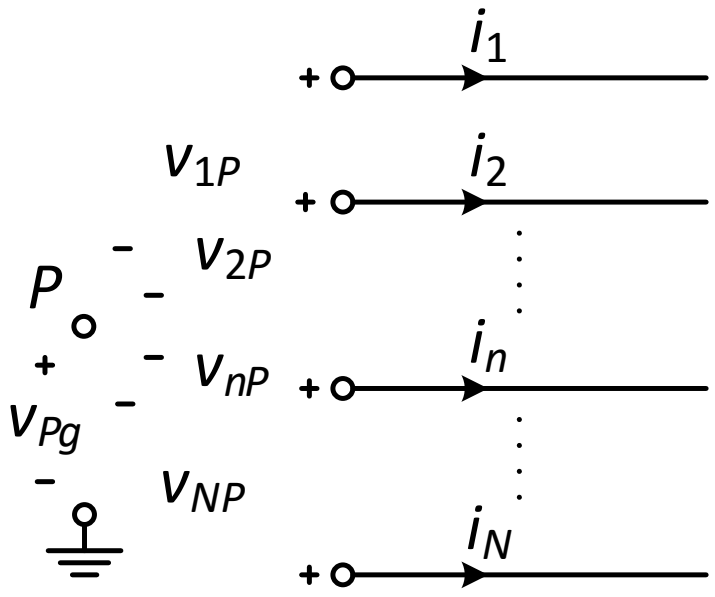

P is **arbitrary**

$$\begin{bmatrix} v_{12} \\ v_{23} \\ \vdots \\ v_{mn} \\ \vdots \\ v_{(N-1)N} \\ v_{\mathrm{CM}} \end{bmatrix} \triangleq \begin{bmatrix} 1 & -1 & 0 & \cdots & 0 & 0 \\ 0 & 1 & -1 & 0 & \cdots & 0 \\ \vdots & \ddots & \ddots & \ddots & \ddots & \vdots \\ 0 & \cdots & 0 & 1 & -1 & 0 \\ 0 & 0 & \cdots & 0 & 1 & -1 \\ \frac{1}{N} & \frac{1}{N} & \cdots & \frac{1}{N} & \frac{1}{N} & \frac{1}{N} \end{bmatrix} \begin{bmatrix} v_{1P} \\ v_{2P} \\ \vdots \\ v_{mP} \\ v_{nP} \\ \vdots \\ v_{NP} \end{bmatrix}$$

$$\begin{bmatrix} i_{12} \\ i_{23} \\ \vdots \\ i_{mn} \\ \vdots \\ i_{(N-1)N} \\ i_{\mathrm{CM}} \end{bmatrix} \triangleq \begin{bmatrix} \frac{1}{2} & -\frac{1}{2} & 0 & \cdots & 0 & 0 \\ 0 & \frac{1}{2} & -\frac{1}{2} & 0 & \cdots & 0 \\ \vdots & \ddots & \ddots & \ddots & \ddots & \vdots \\ 0 & \cdots & 0 & \frac{1}{2} & -\frac{1}{2} & 0 \\ 0 & 0 & \cdots & 0 & \frac{1}{2} & -\frac{1}{2} \\ 1 & 1 & \cdots & 1 & 1 & 1 \end{bmatrix} \begin{bmatrix} i_1 \\ i_2 \\ \vdots \\ i_m \\ i_n \\ \vdots \\ i_N \end{bmatrix}$$

A. D. Brovont, "Generalized Differential-Common-Mode Decomposition for Modeling Conducted Emissions in Asymmetric Power Electronic Systems," *IEEE Trans. Power Electron.*, vol. 33, no. 8, pp. 6461-6466, Aug. 2018.

These specific definitions lay the foundation for CM equivalent circuit modeling.

Example microgrid

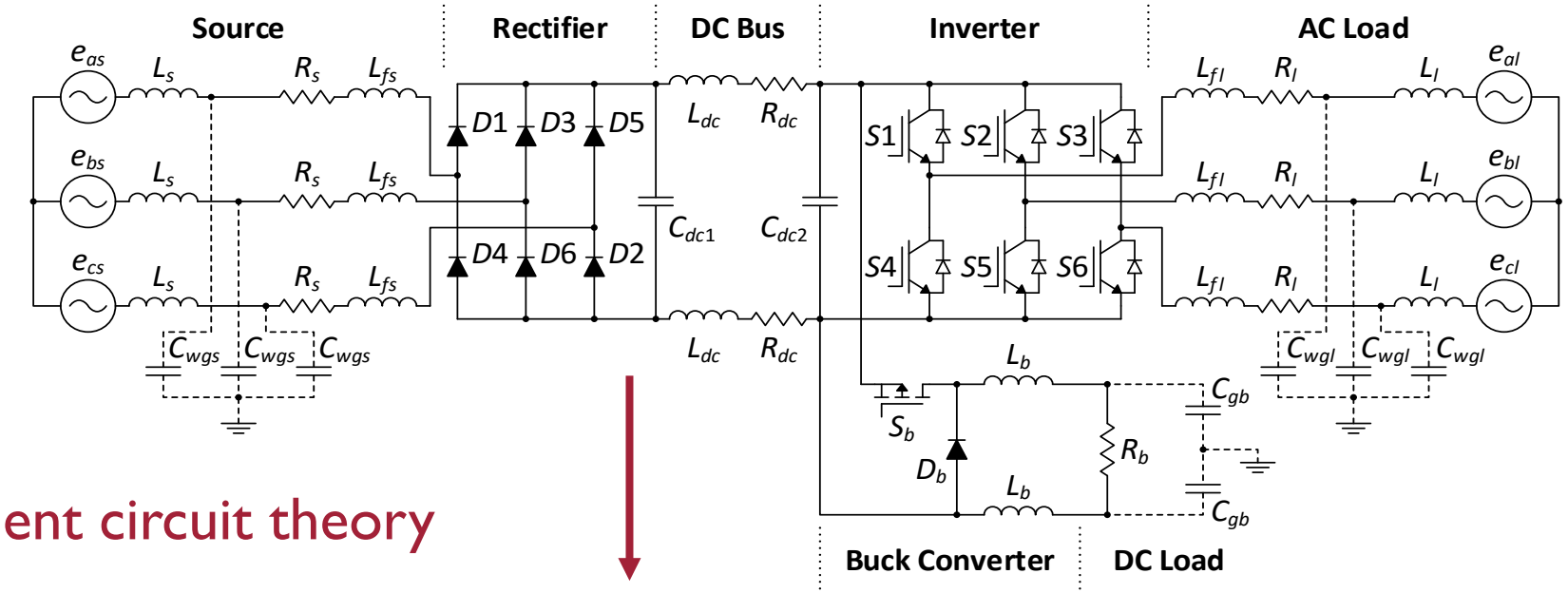

CM equivalent circuit theory

Reduced CM model

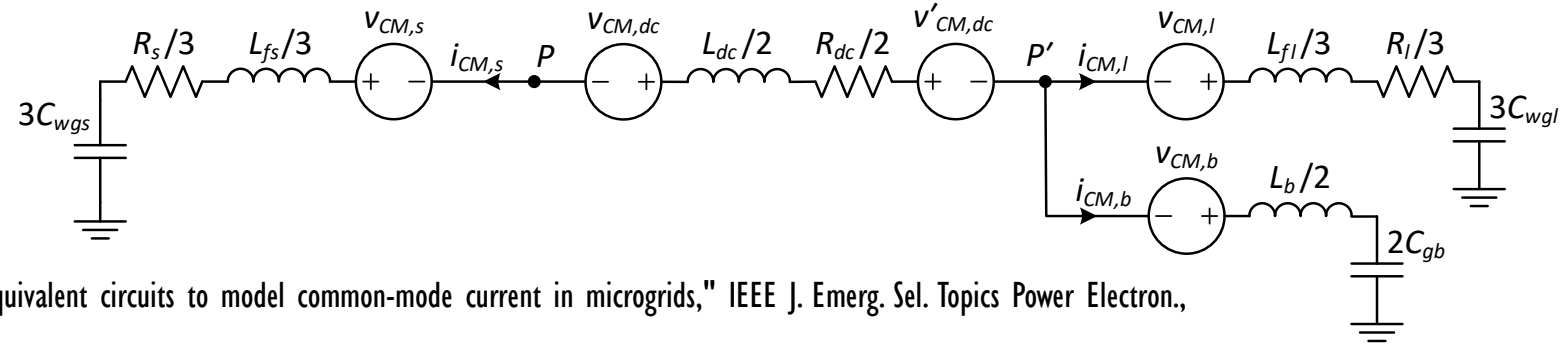

A. D. Brovont & S. D. Pekarek, "Derivation and application of equivalent circuits to model common-mode current in microgrids," IEEE J. Emerg. Sel. Topics Power Electron., vol. 5, no. 1, pp.1-12, March 2017.

Why don't we just simulate mixed-mode circuits?

OR, why do we need CM equivalent circuits?

- Wide range of time-constants
- Often a large number of electrical components
- Recipe for numerical heartache as number of components increase
- Does not give any design insight unless run many simulations and interpret a lot of data

Example: platform developed for in situ emissions characterization of intermediary conversion systems.

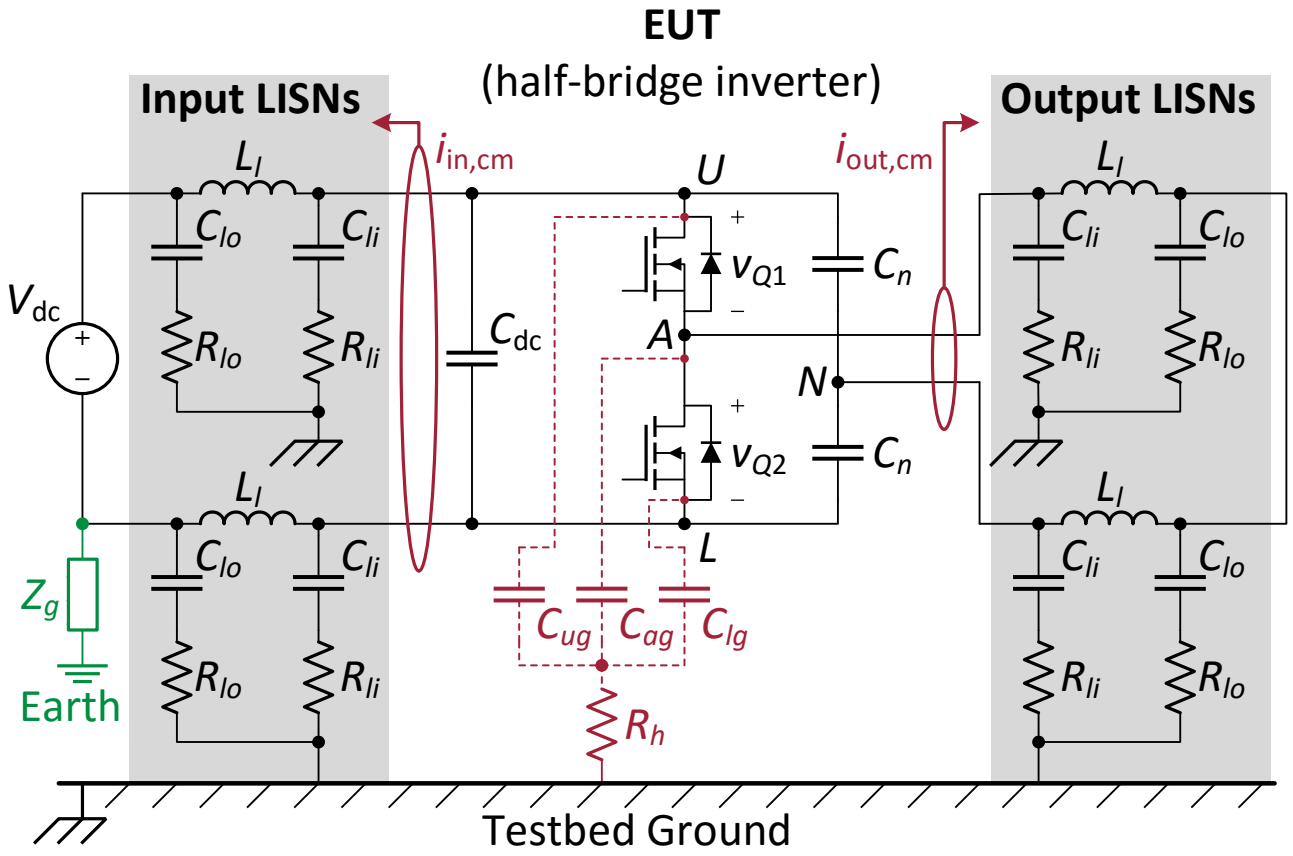

- Architecture inspired by MIL-STD-461 CE-102
- Terminations at input and output representative of fielded applications
- Platform provides DM and CM model validation environment for EUT
- Employed to study leakage currents through module parasitics

An example application of the modeling approach

Half-bridge configuration of UA EMI testbed

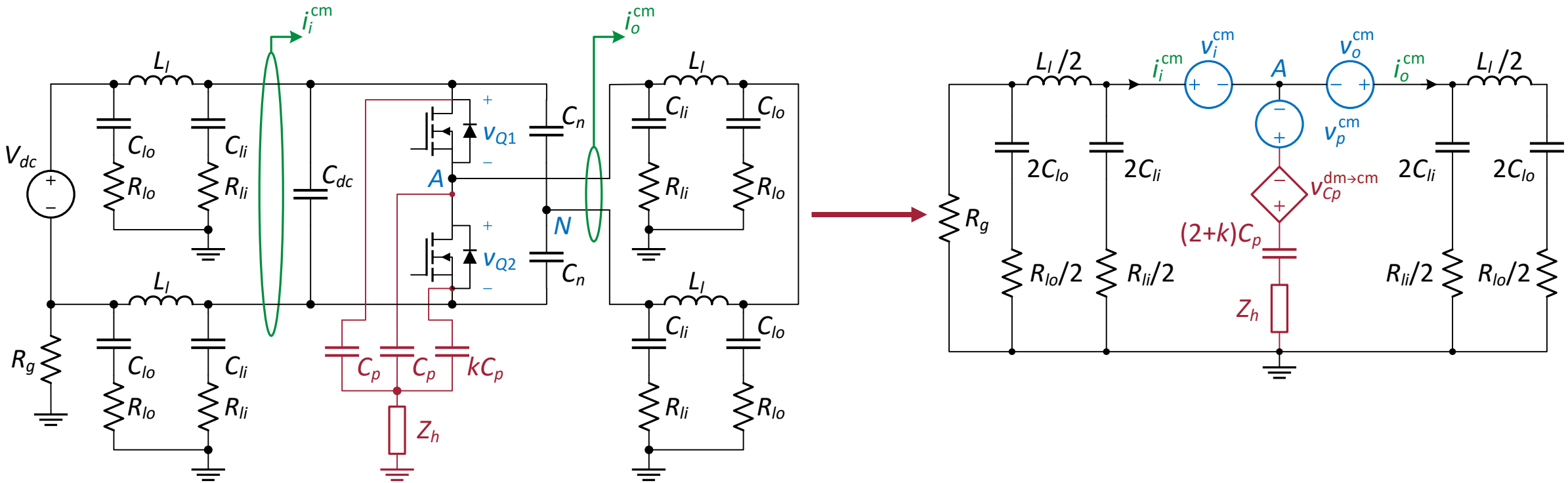

Half-bridge EMI testbed $\xrightarrow{\text{CM equivalent circuit theory}}$ **CM equivalent model**

A. D. Brovont and A. N. Lemmon, "Common-mode/differential-mode interactions in asymmetric converter structures," in Proc. IEEE Electric Ship Technologies Symposium, Arlington, VA, 2017, pp. 84-90.

CM model development in four steps

1. Add important parasitics to MM component models
2. Partition MM model around switches
3. Transform components to CM equivalent circuits
4. Connect component equivalent circuits using CM reference to form system model

1) Create the mixed-mode model

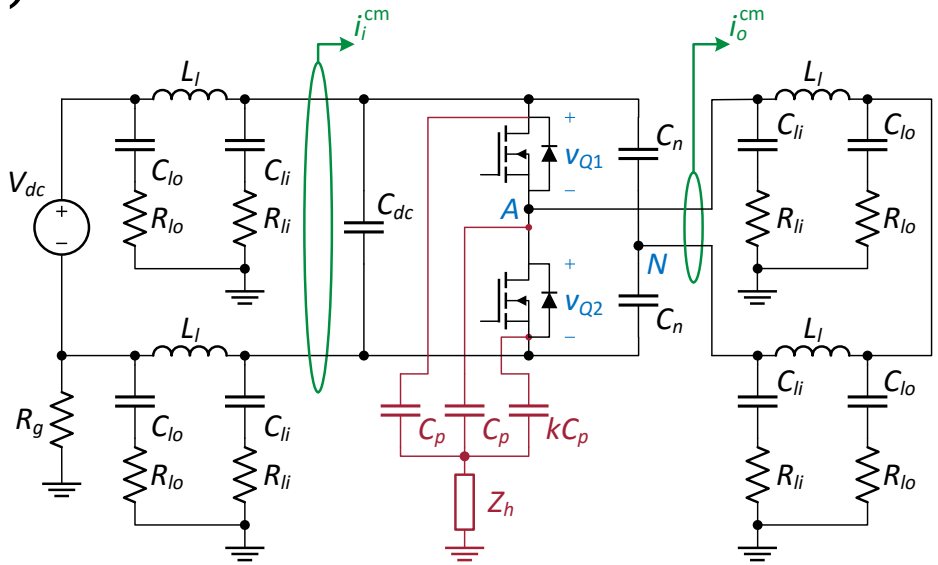

2) Partition model around switches

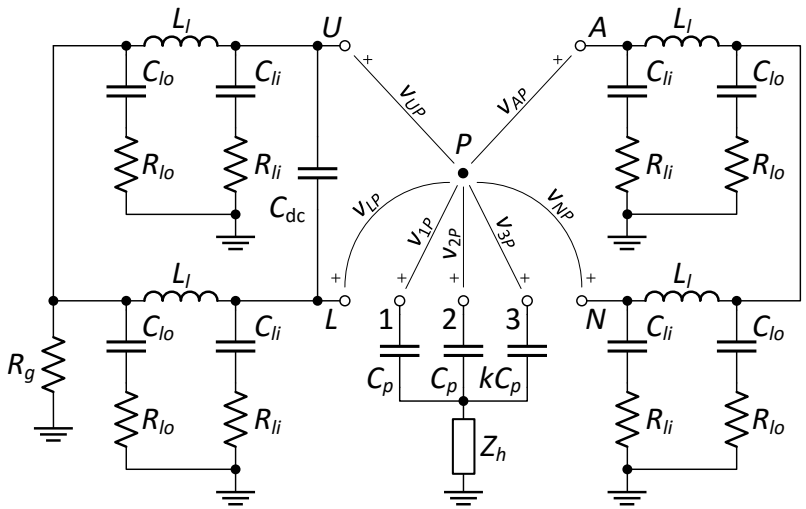

3) Decompose components into equivalents

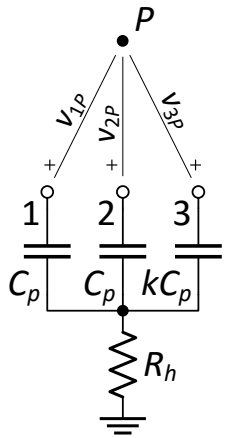

Left multiply by $\mathbf{T}_3^{v}$ and sub in $(\mathbf{T}_3^{i})^{-1}\mathbf{i}_{DCM}$

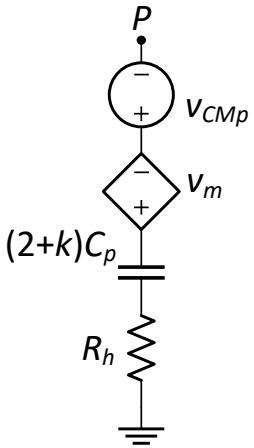

4) Combine equivalents using CM reference

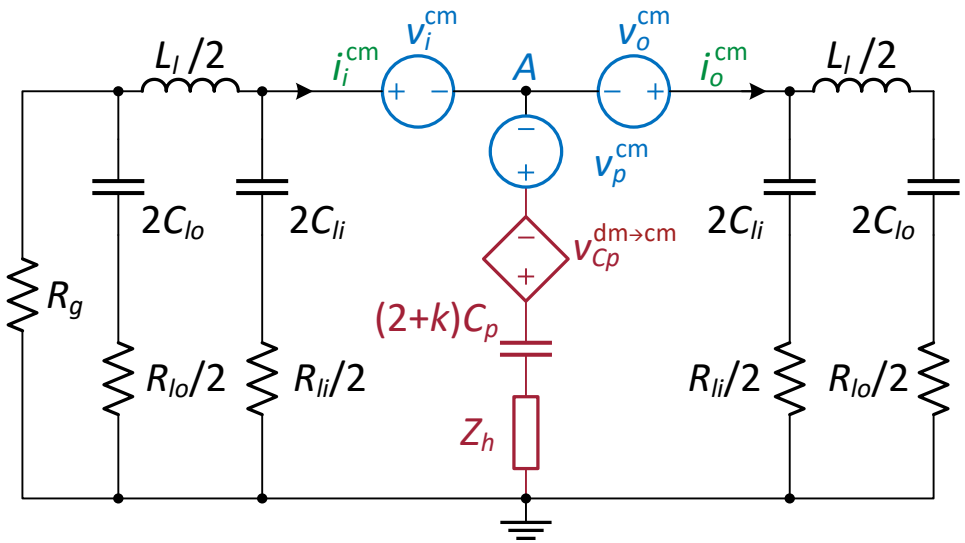

Step 1: Create the mixed-mode model

- Add parasitics to the standard MM model (if desired or necessary)
- Assuming symmetric parasitics for sake of demonstration

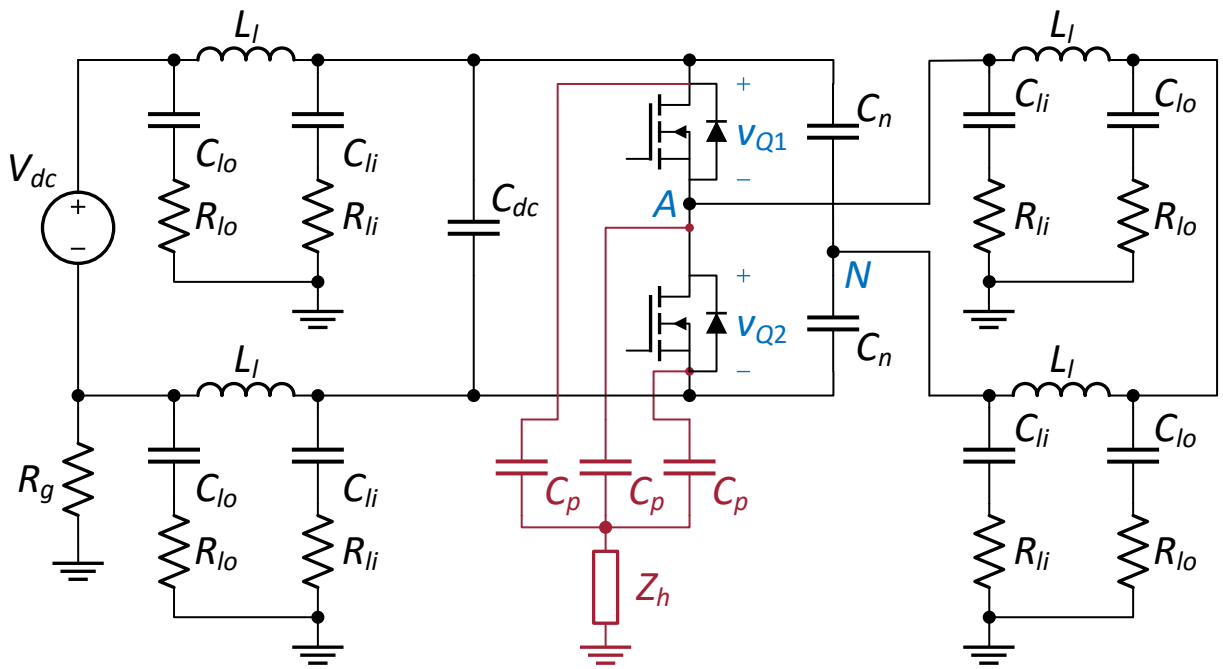

Step 2: Partition MM model around switches

Focus on the non-power-electronic elements – partition into groups

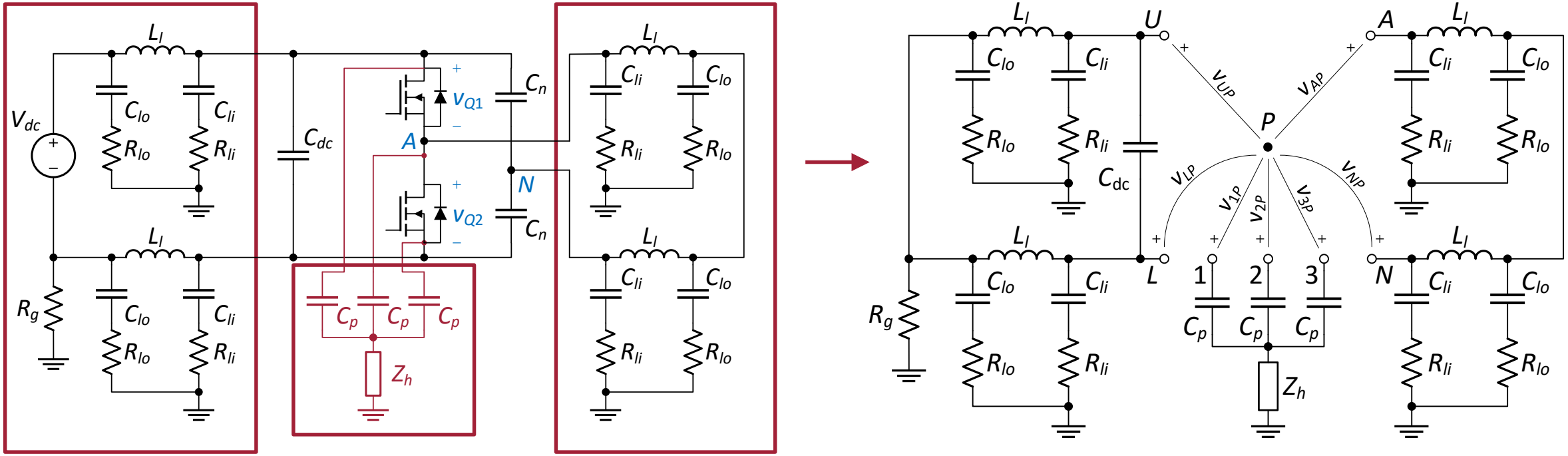

Step 3: Symmetric lines transform following simple parallel addition rules in CM.

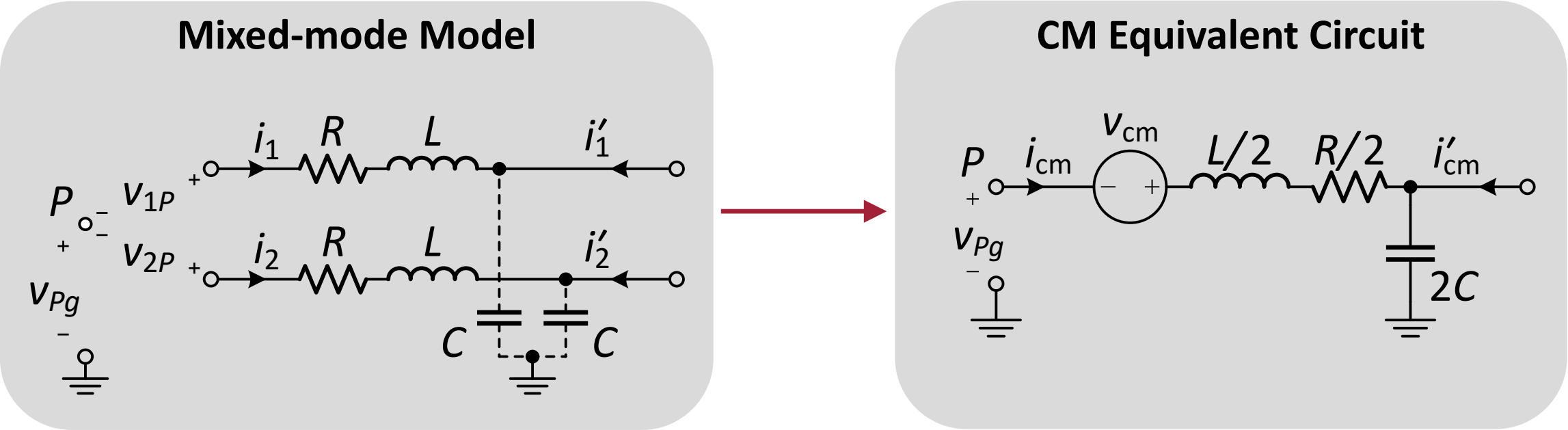

A. D. Brovont & S. D. Pekarek, "Derivation and application of equivalent circuits to model common-mode current in microgrids," IEEE J. Emerg. Sel. Topics Power Electron., vol. 5, no. 1, pp.1-12, March 2017.

Step 3(a) Detail

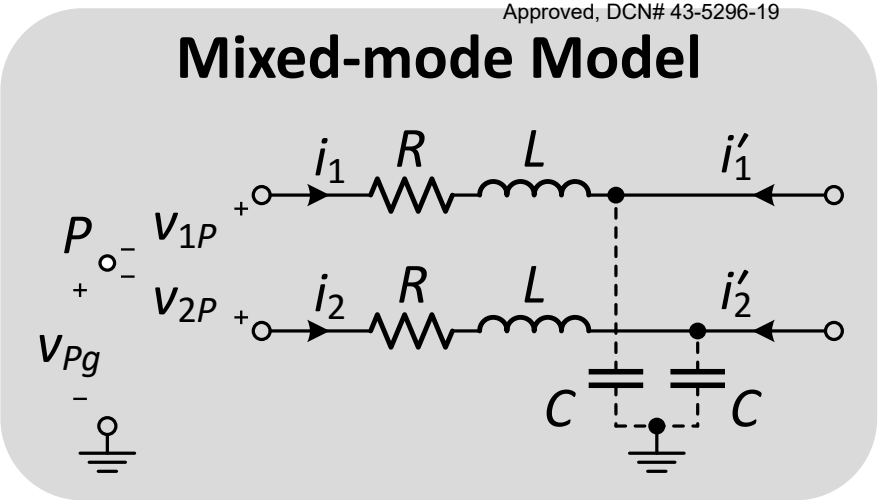

Step 3(b): three-line example

Parasitic baseplate capacitance

Mixed-mode Model

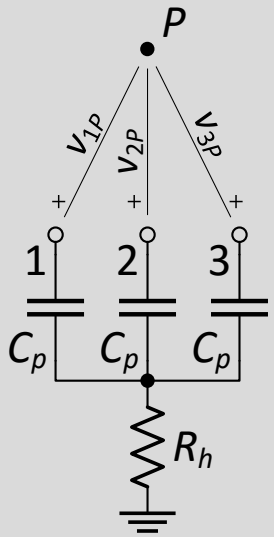

$$\mathbf{R}_h = R_h \begin{bmatrix} 1 & 1 & 1 \\ 1 & 1 & 1 \\ 1 & 1 & 1 \end{bmatrix}$$

$$\mathbf{S}_p = \frac{1}{C_p} \begin{bmatrix} 1 & 0 & 0 \\ 0 & 1 & 0 \\ 0 & 0 & 1 \end{bmatrix}$$

$$\begin{bmatrix} v_{1P} \\ v_{2P} \\ v_{3P} \end{bmatrix} + v_{Pg} \begin{bmatrix} 1 \\ 1 \\ 1 \end{bmatrix} = \left(\frac{\mathbf{S}_p}{\mathrm{p}} + \mathbf{R}_h \right) \begin{bmatrix} i_1 \\ i_2 \\ i_3 \end{bmatrix}$$

Left multiply by $\mathbf{T}_3^v$ and sub in $(\mathbf{T}_3^i)^{-1}\mathbf{i}_{dcm}$

$$\mathbf{T}_3^v = \begin{bmatrix} 1 & -1 & 0 \\ 0 & 1 & -1 \\ \frac{1}{3} & \frac{1}{3} & \frac{1}{3} \end{bmatrix}$$

$$\mathbf{T}_3^i = \begin{bmatrix} \frac{1}{2} & -\frac{1}{2} & 0 \\ 0 & \frac{1}{2} & -\frac{1}{2} \\ 1 & 1 & 1 \end{bmatrix}$$

CM Equivalent Circuit

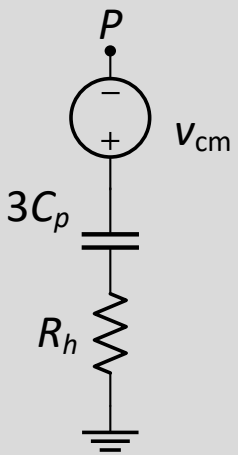

$$\mathbf{R}'_h = R_h \begin{bmatrix} 0 & 0 & 0 \\ 0 & 0 & 0 \\ 0 & 0 & 1 \end{bmatrix}$$

$$\mathbf{S}'_p = \frac{1}{C_p} \begin{bmatrix} 3 & 0 & 0 \\ 0 & 3 & 0 \\ 0 & 0 & \frac{1}{3} \end{bmatrix}$$

$$\begin{bmatrix} v_{12} \\ v_{23} \\ v_{cm} \end{bmatrix} + v_{Pg} \begin{bmatrix} 0 \\ 0 \\ 1 \end{bmatrix} = \left(\frac{\mathbf{S}'_p}{\mathrm{p}} + \mathbf{R}'_h \right) \begin{bmatrix} i_{12} \\ i_{23} \\ i_{cm} \end{bmatrix}$$

A. D. Brovont, "Generalized Differential-Common-Mode Decomposition for Modeling Conducted Emissions in Asymmetric Power Electronic Systems," *IEEE Trans. Power Electron.*, vol. 33, no. 8, pp. 6461-6466, Aug. 2018.

Step 3(b) Detail

Mixed-mode Model

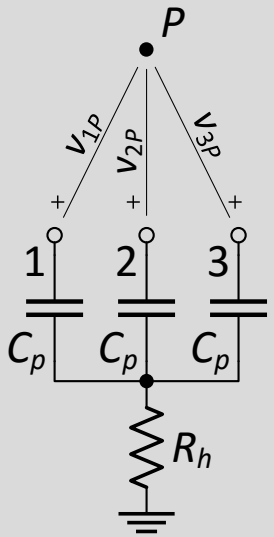

Step 4: Form system model by specifying reference point(s)

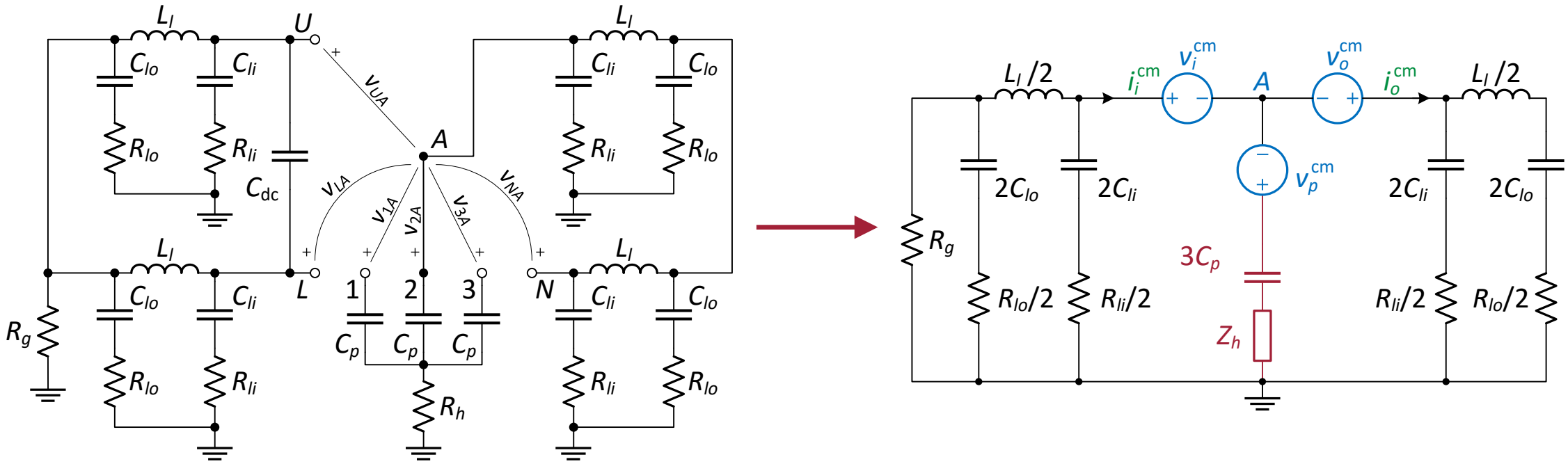

Step 4: Form system model by specifying reference point(s)

- Select shared reference point and connect CM equivalent circuits
- Phase node *A* is selected in this example

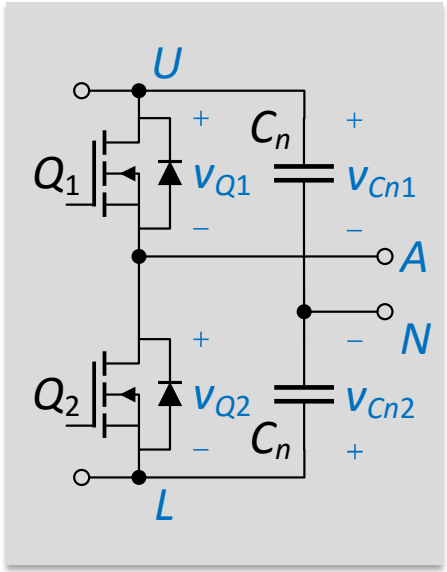

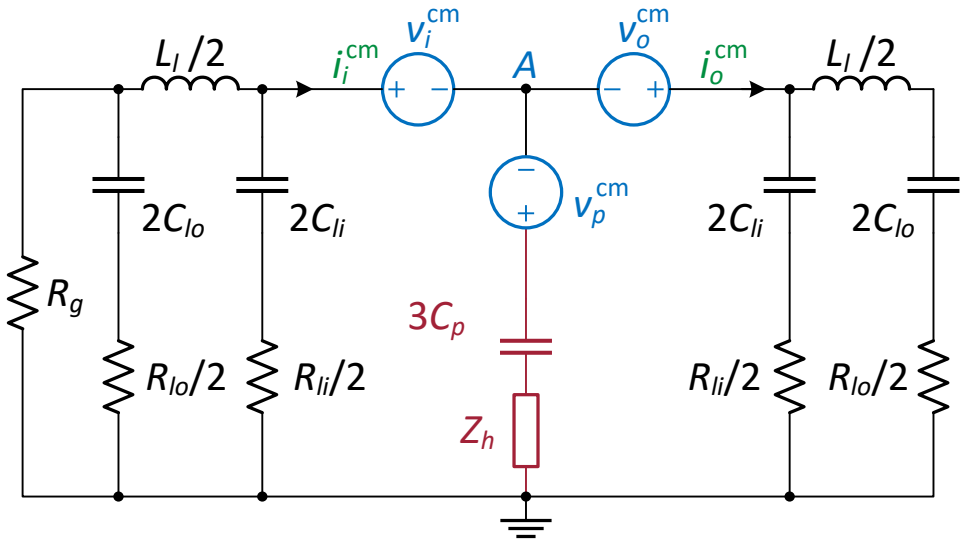

Intrinsic CM voltage sources

$$v_i^{cm} \triangleq \frac{1}{2}(v_{UA} + v_{LA}) = \frac{1}{2}(v_{Q1} - v_{Q2})$$

$$v_o^{cm} \triangleq \frac{1}{2}(v_{AA} + v_{NA}) = \frac{1}{2}v_{NA}$$

$$v_p^{cm} \triangleq \frac{1}{2}(v_{UA} + v_{AA} + v_{LA}) = \frac{1}{3}(v_{Q1} - v_{Q2})$$

Overall system model

Half-bridge configuration of EMI testbed

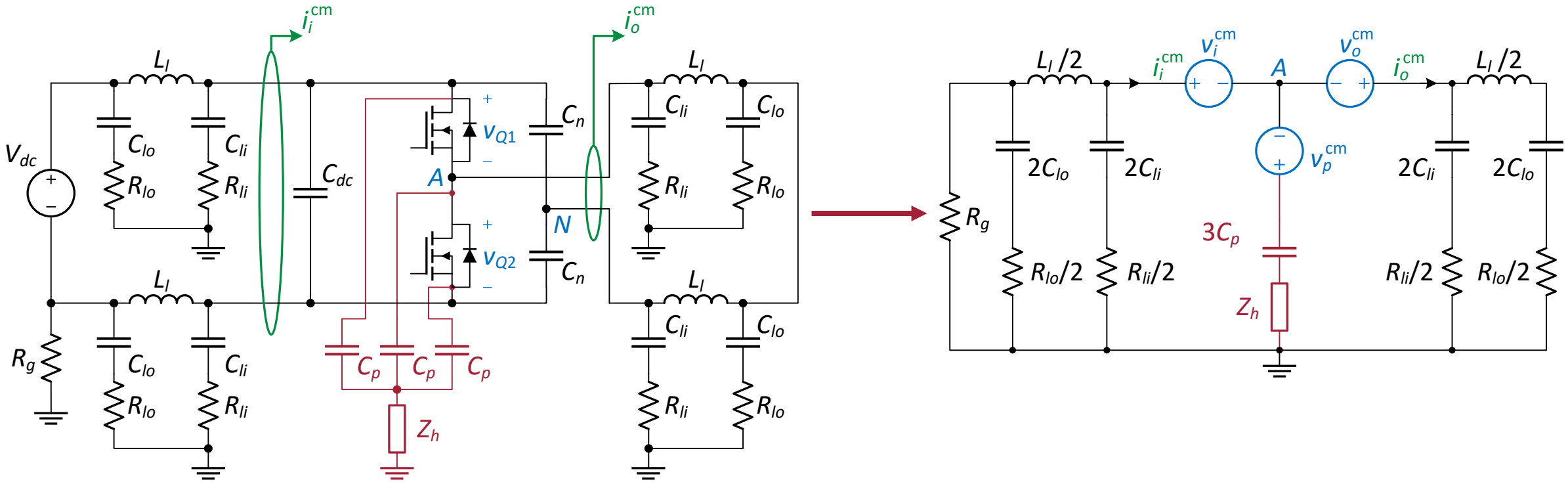

Half-bridge EMI testbed $\xrightarrow{\text{CM equivalent circuit theory}}$ **CM equivalent model**

How to model effects of asymmetry?

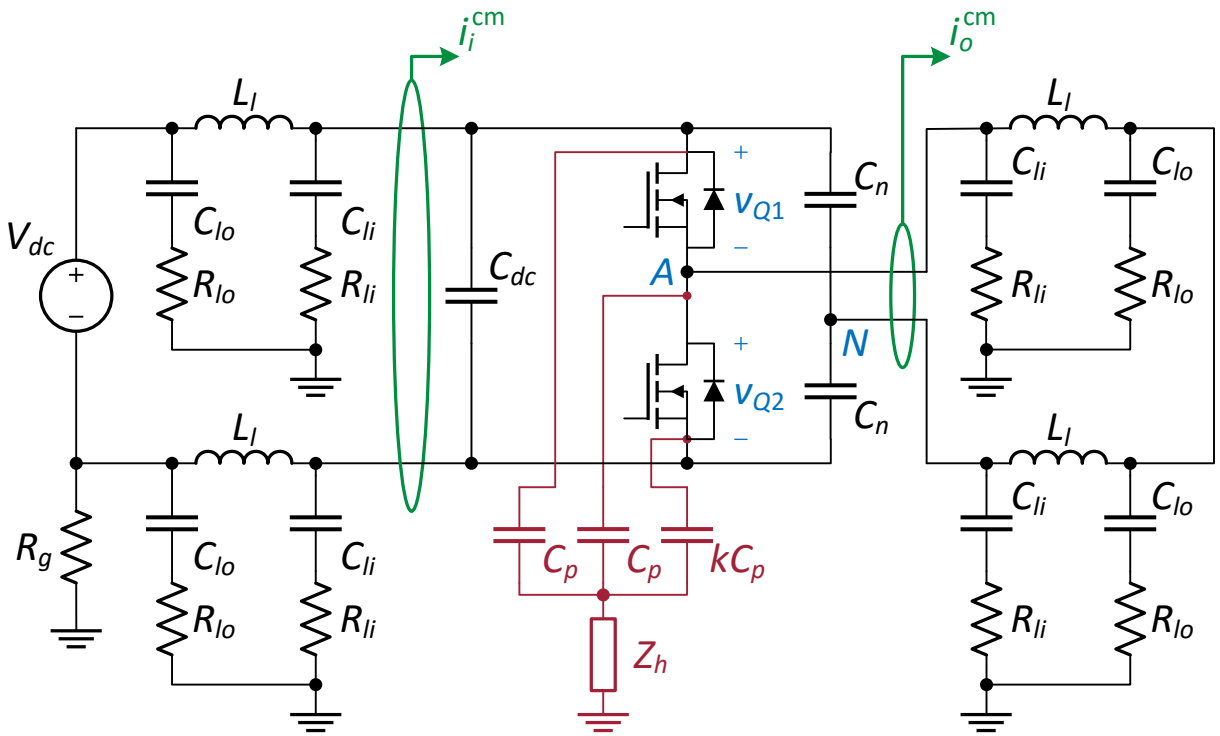

- Asymmetry between lines of a CM path produces "mode conversion"
- Introduce an asymmetry factor *k* in module parasitics to investigate impact

Decomposition approach to asymmetric components

Parasitic baseplate capacitance

Mixed-mode Model

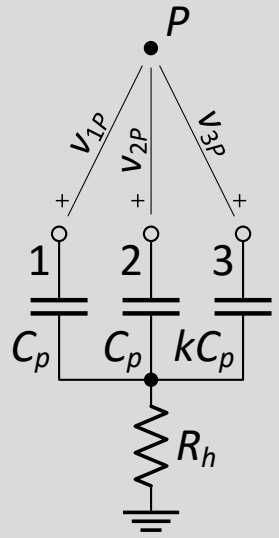

$$\begin{bmatrix} i_1 \\ i_2 \\ i_3 \end{bmatrix} = \mathrm{p}C_p \begin{bmatrix} 1 & 0 & 0 \\ 0 & 1 & 0 \\ 0 & 0 & k \end{bmatrix} \begin{bmatrix} v_{1,Cp} \\ v_{2,Cp} \\ v_{3,Cp} \end{bmatrix}$$

Left multiply by $\mathbf{T}_3^{\,i}$ and sub in $(\mathbf{T}_3^{\,v})^{-1}\mathbf{v}_{\mathrm{dcm}}$

$$\mathbf{T}_3^v = \begin{bmatrix} 1 & -1 & 0 \\ 0 & 1 & -1 \\ \frac{1}{3} & \frac{1}{3} & \frac{1}{3} \end{bmatrix}$$

$$\mathbf{T}_3^i = \begin{bmatrix} \frac{1}{2} & -\frac{1}{2} & 0 \\ 0 & \frac{1}{2} & -\frac{1}{2} \\ 1 & 1 & 1 \end{bmatrix}$$

$$\begin{bmatrix} i_{Cp}^{\mathrm{dm12}} \\ i_{Cp}^{\mathrm{dm23}} \\ i_{Cp}^{\mathrm{cm}} \end{bmatrix} = \mathrm{p}\mathbf{C}_p \begin{bmatrix} v_{Cp}^{\mathrm{dm12}} \\ v_{Cp}^{\mathrm{dm23}} \\ v_{Cp}^{\mathrm{cm}} \end{bmatrix}$$

$$\mathbf{C}_p = C_p \begin{bmatrix} \frac{1}{2} & 0 & 0 \\ -\frac{1}{6}(1-k) & \frac{1}{6}(1+2k) & \frac{1}{2}(1-k) \\ \frac{1}{3}(1-k) & \frac{2}{3}(1-k) & 2+k \end{bmatrix}$$

Decomposition approach to asymmetric components

Parasitic baseplate capacitance

Mixed-mode Model

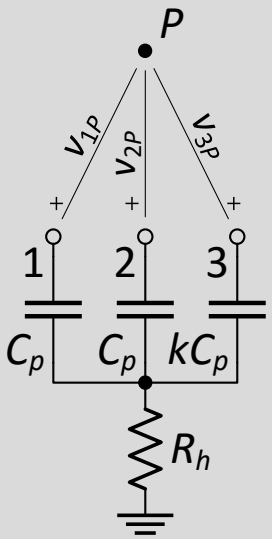

$$\begin{bmatrix} v_{1P} \\ v_{2P} \\ v_{3P} \end{bmatrix} + v_{Pg} \begin{bmatrix} 1 \\ 1 \\ 1 \end{bmatrix} = \left(\frac{\mathbf{S}_p}{\mathrm{p}} + \mathbf{R}_h \right) \begin{bmatrix} i_1 \\ i_2 \\ i_3 \end{bmatrix}$$

CM Equivalent Circuit

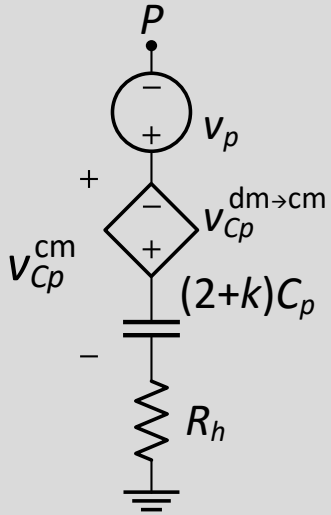

$$v_p^{cm} + v_{Pg} = -\frac{1-k}{3(2+k)}\left(v_{Cp}^{dm12} + 2v_{Cp}^{dm23}\right) + \left[\frac{1}{\mathrm{p}(2+k)C_p} + R_h\right] i_{Cp}^{cm}$$

A. D. Brovont, "Generalized Differential-Common-Mode Decomposition for Modeling Conducted Emissions in Asymmetric Power Electronic Systems," *IEEE Trans. Power Electron.*, vol. 33, no. 8, pp. 6461-6466, Aug. 2018.

Overall system model

Half-bridge configuration of UA EMI testbed

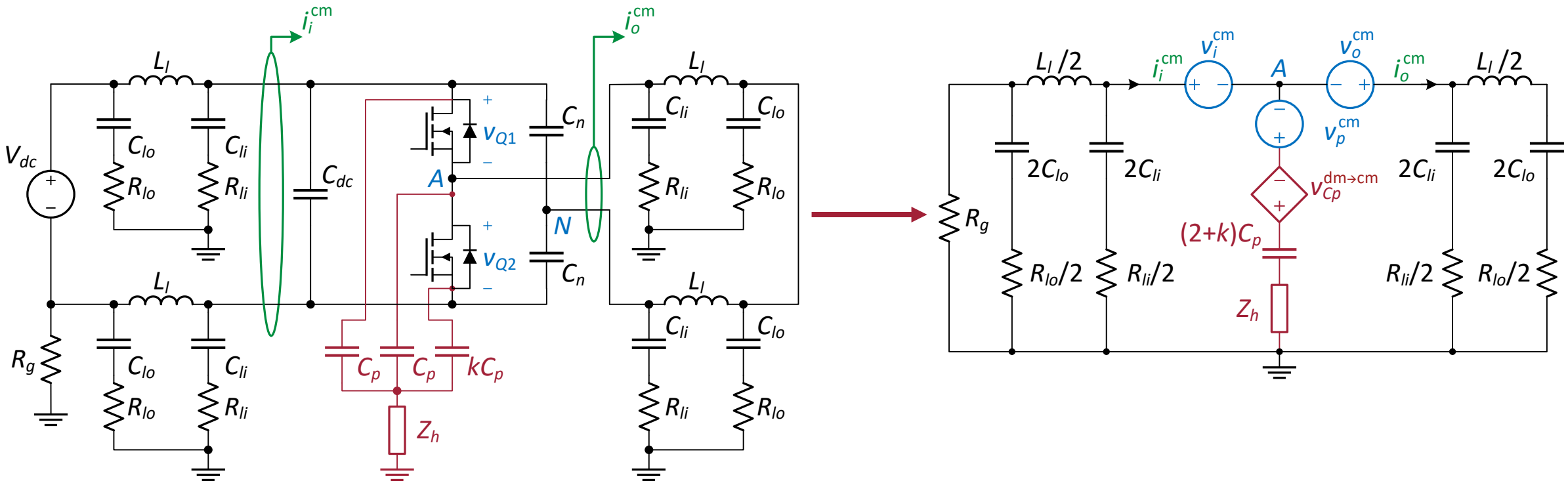

Half-bridge EMI testbed $\xrightarrow{\text{CM equivalent circuit theory}}$ **CM equivalent model**

A. D. Brovont and A. N. Lemmon, "Common-mode/differential-mode interactions in asymmetric converter structures," in Proc. IEEE Electric Ship Technologies Symposium, Arlington, VA, 2017, pp. 84-90.

Bonus: Analyze/approximate output CM voltage source

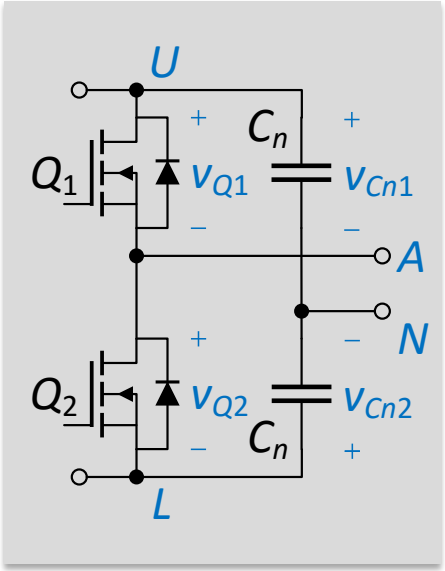

$$
\begin{aligned}
v_o^{\text{cm}} &\triangleq \frac{1}{2} v_{NA} \\
&= \frac{1}{2}(v_{Q1} - v_{Cn1}) \\
&= -\frac{1}{2}(v_{Q2} + v_{Cn2}) \\
&= \frac{1}{4}(v_{Q1} - v_{Q2}) - \frac{1}{4}(v_{Cn1} + v_{Cn2})
\end{aligned}
$$

The second term is the CM voltage of the neutral-clamping capacitors. If C_n is large, this voltage is approximately constant:

$$
\begin{aligned}
v_o^{\text{cm}} &= \frac{1}{4}(v_{Q1} - v_{Q2}) - \frac{1}{4} v_{Cn}^{\text{cm}} \\
&\approx \frac{1}{4}(v_{Q1} - v_{Q2})
\end{aligned}
$$

A. D. Brovont and A. N. Lemmon, "Common-mode/differential-mode interactions in asymmetric converter structures," in Proc. IEEE Electric Ship Technologies Symposium, Arlington, VA, 2017, pp. 84-90.

Bonus: Analyze/approximate mode conversion source

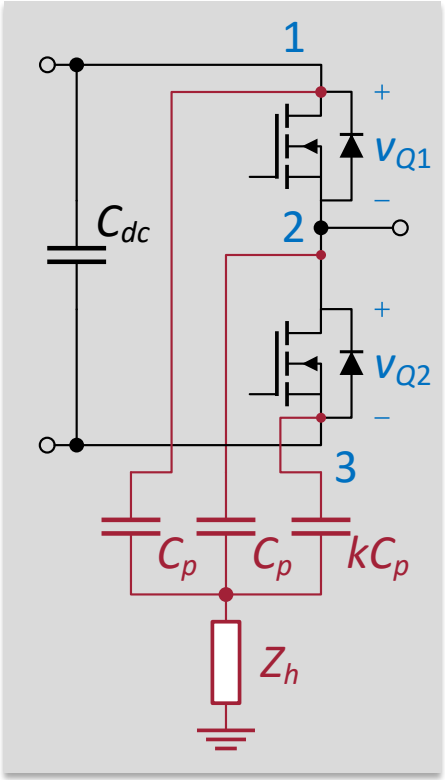

The second term is the CM voltage of the neutral-clamping capacitors. If C_n is large, this voltage is approximately constant:

$$
\begin{aligned}
v_{Cp}^{\mathrm{dm}\to\mathrm{cm}} &= \frac{1-k}{3(2+k)}\left(v_{Cp}^{\mathrm{dm}12} + 2v_{Cp}^{\mathrm{dm}23}\right) \\
&\approx \frac{1-k}{3(2+k)}\left(v_{Q1} + 2v_{Q2}\right) \\
&\approx -\frac{1-k}{6(2+k)}\left(v_{Q1} - v_{Q2}\right) + \frac{1-k}{2(2+k)} v_{C\mathrm{dc}}
\end{aligned}
$$

A. D. Brovont and A. N. Lemmon, "Common-mode/differential-mode interactions in asymmetric converter structures," in Proc. IEEE Electric Ship Technologies Symposium, Arlington, VA, 2017, pp. 84-90.

Summary: CM equivalent model of the testbed

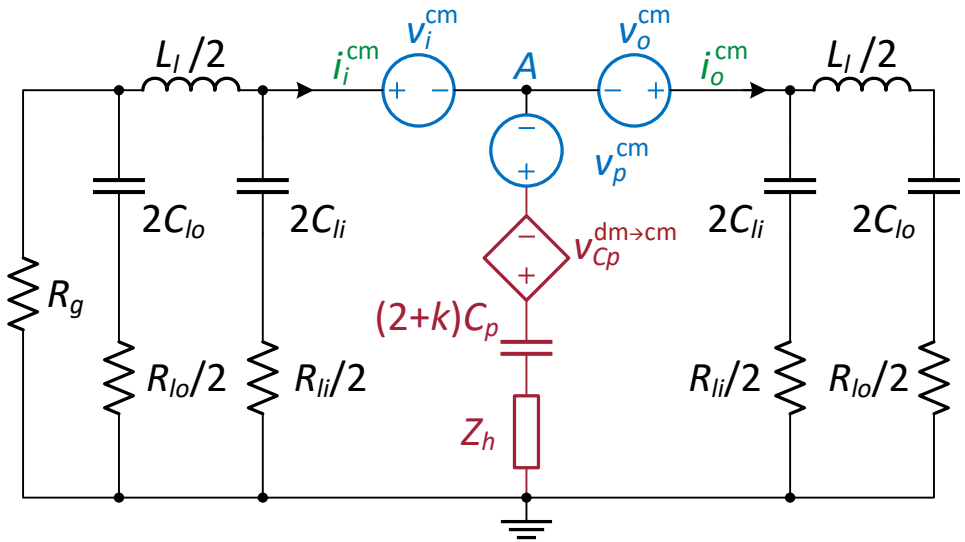

$$v_i^{cm} = \frac{1}{2}v_{Q1} - v_{Q2}$$
$$v_o^{cm} = \frac{1}{4}v_{Q1} - v_{Q2} + \frac{1}{4}v_{Cn}^{cm}$$
$$v_p^{cm} = \frac{1}{3}v_{Q1} - v_{Q2}$$
$$v_{Cp}^{dm\to cm} = -\frac{1-k}{6(2+k)}(v_{Q1} - v_{Q2}) + \frac{1-k}{2(2+k)}v_{Cdc}$$

- CM voltage sources dominated by switching
  - d*v*/d*t* & switching frequency critical parameters
- Voltage ripple at neutral point injected into CM
  - Self-resonant behavior of *C*n must be avoided (ESL critical)
- Voltage ripple at dc input injected due to mode conversion
  - Self-resonant behavior of *C*dc must be avoided (ESL critical)

A. D. Brovont and A. N. Lemmon, "Common-mode/differential-mode interactions in asymmetric converter structures," in Proc. IEEE Electric Ship Technologies Symposium, Arlington, VA, 2017, pp. 84-90.

APPLICATION AND VALIDATION OF CM MODELING APPROACH

UA SiC EMI Characterization Testbed Implementation

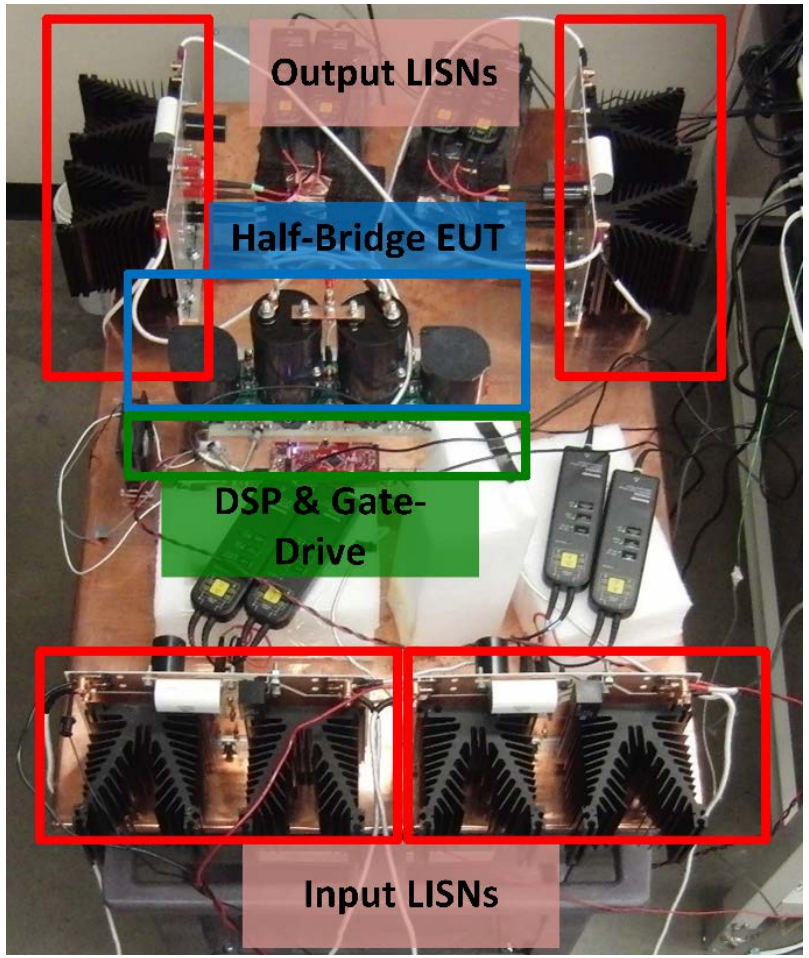

- Identical, characterized input and output termination impedances
- Natural convection cooling to avoid corruption from thermal management
- Diff. probes and current probes used for utility ground isolation
- Testbed and utility ground connected only through DC supply
- Testbed configured with half-bridge inverter EUT employing Cree CAS120 1.2-kV SiC half-bridge MCPM

A. Brovont, A. Lemmon, C. New, B. Nelson, B. DeBoi, "Cancellation of Leakage Currents through Power Module Baseplate Capacitance," in *Proc. IEEE Appl. Power Electron. Conf.*, March 2019.

Leakage current through MCPM was measured in the EMI characterization testbed.

- Half-Bridge EUT with shorted load (only LISN impedance)†
  - Measured displacement current through MCPM baseplate through LISNs on input and output.
  - 100 kHz fixed-duty PWM, 300 ns dead time, 600 V DC bus
- Results were compared against nominal model with measured parasitic baseplate capacitances

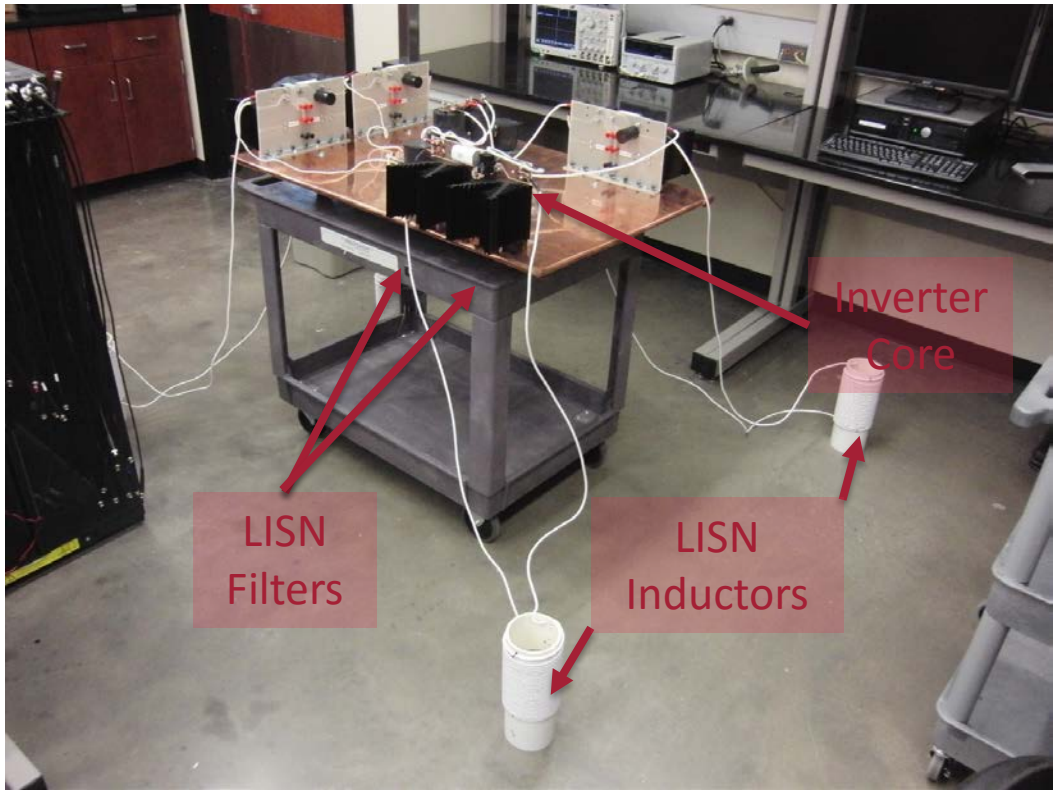

EMI Characterization Testbed at UA

†A. Lemmon, R. Cuzner, J. Gafford, R. Hosseini, A. Brovont, M. Mazzola, "Methodology for Characterization of Common-Mode Conducted Electromagnetic Emissions in Wide-Band-Gap Converters for Ungrounded Shipboard Applications," in IEEE Journal of Emerging and Selected Topics in Power Electronics, vol. 6, no. 1, pp. 300-314, March 2018.

Characterizing the MCPM Baseplate Capacitance

- Baseplate capacitance was not measured previously
- Cannot be measured from the terminals
- A sample module (Cree CAS120) from the EMI testbed was deconstructed to accurately quantify the capacitances

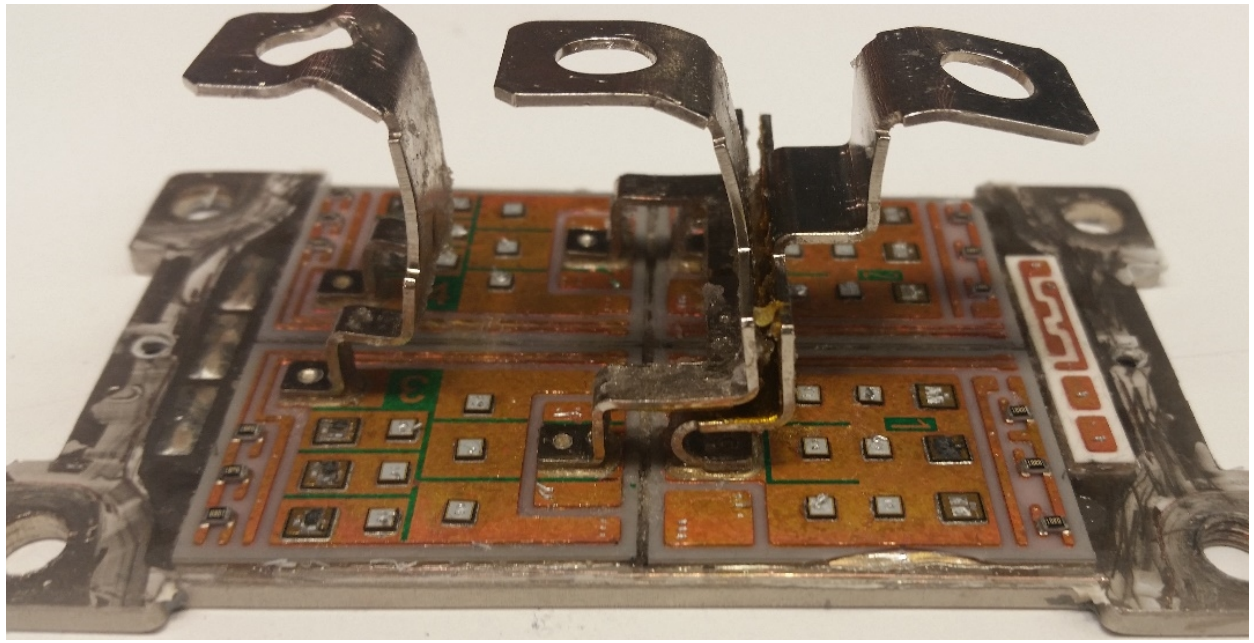

Parameter	Description	Value	Units
C_{ug}	U-to-baseplate capacitance	191	pF
C_{ag}	A-to-baseplate capacitance	255.7	pF
C_{lg}	L-to-baseplate capacitance	102.6	pF
C_{bp}	total baseplate capacitance	549.3	pF

CM voltage noise source modeling

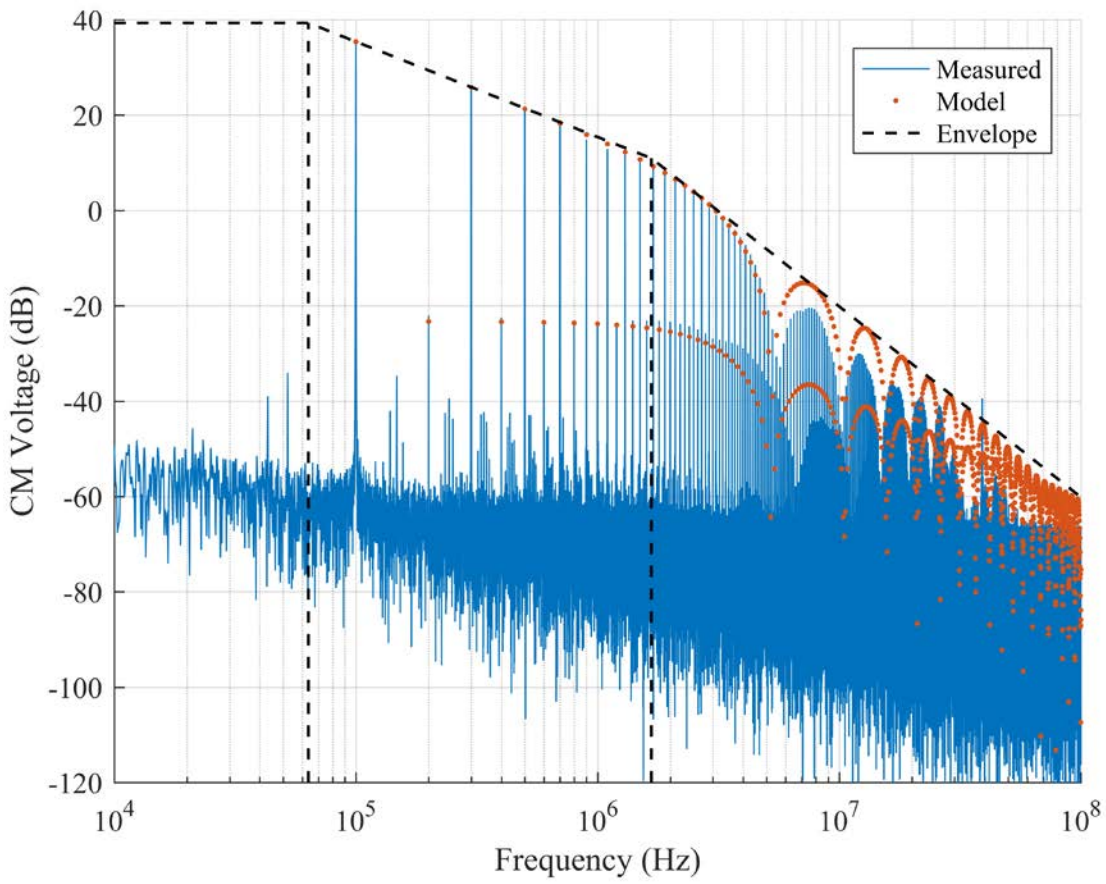

- The dominant component of the CM voltage is proportional to (v_{Q1}-v_{Q2})
- This term is readily modeled from the nominal input voltage, duty cycle, and average rise and fall time of the switch voltage:

$$c_n^+ \propto 4dV_{\mathrm{dc}}\,\mathrm{sinc}(nd)\,\mathrm{sinc}(nf_{sw}\tau_{rf})$$

Equivalent model reduced and analyzed to predict baseplate current.

- The expression for the equivalent CM source with respect to the baseplate is approximately

$$v_{bp,eq}^{cm} = \frac{k-2}{8(2+k)}(v_{Q1} - v_{Q2})$$

- Model indicates strong influence of MCPM parasitic asymmetry and potential compensation†

Reduced CM Equivalent Model

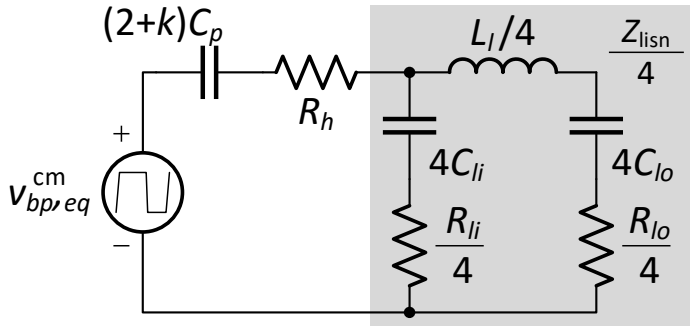

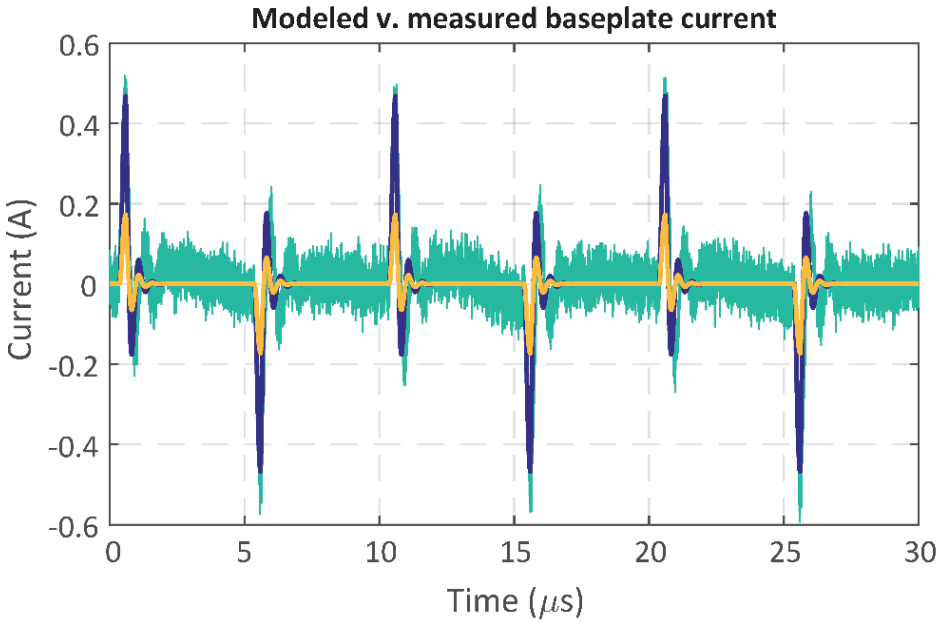

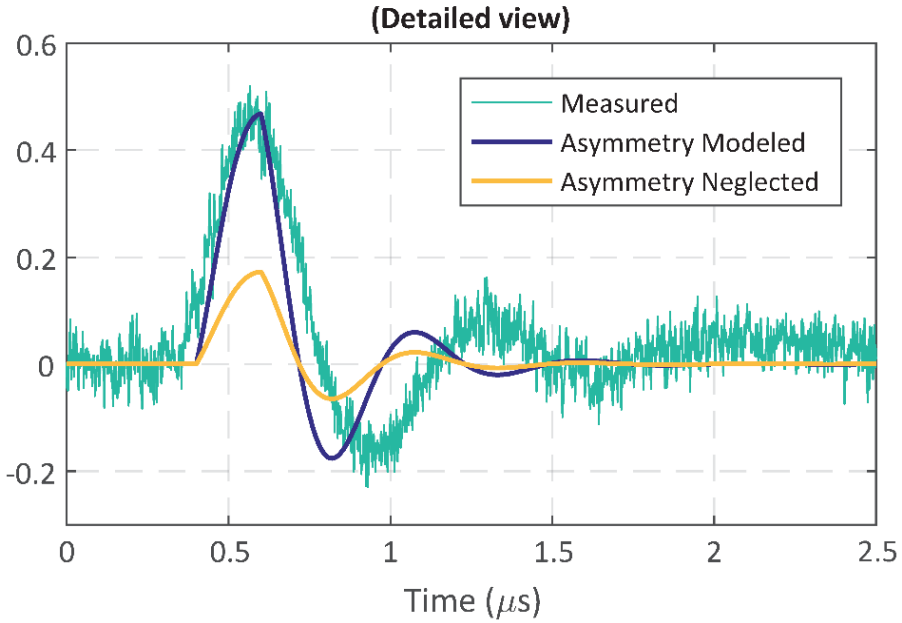

A. D. Brovont and A. N. Lemmon, "Common-mode/differential-mode interactions in asymmetric converter structures," in Proc. IEEE Electric Ship Technologies Symposium, Arlington, VA, 2017, pp. 84-90.

STUDY OF BASEPLATE CAPACITANCE IN MULTICHIP POWER MODULES

Unbalanced baseplate capacitance is a critical factor affecting leakage current through baseplate.

- DBC substrate geometry leads to capacitive coupling between terminals and baseplate
- High d*v*/d*t* drives leakage current through the baseplate
- Low-side source terminal (S_2) usually occupies much less substrate area than D_1 and S_1D_2 (which are similar)
- In general, D_1, S_1D_2, and S_2 substrate areas are all **different** leading to unequal C_{ug}, C_{ag}, and C_{lg}

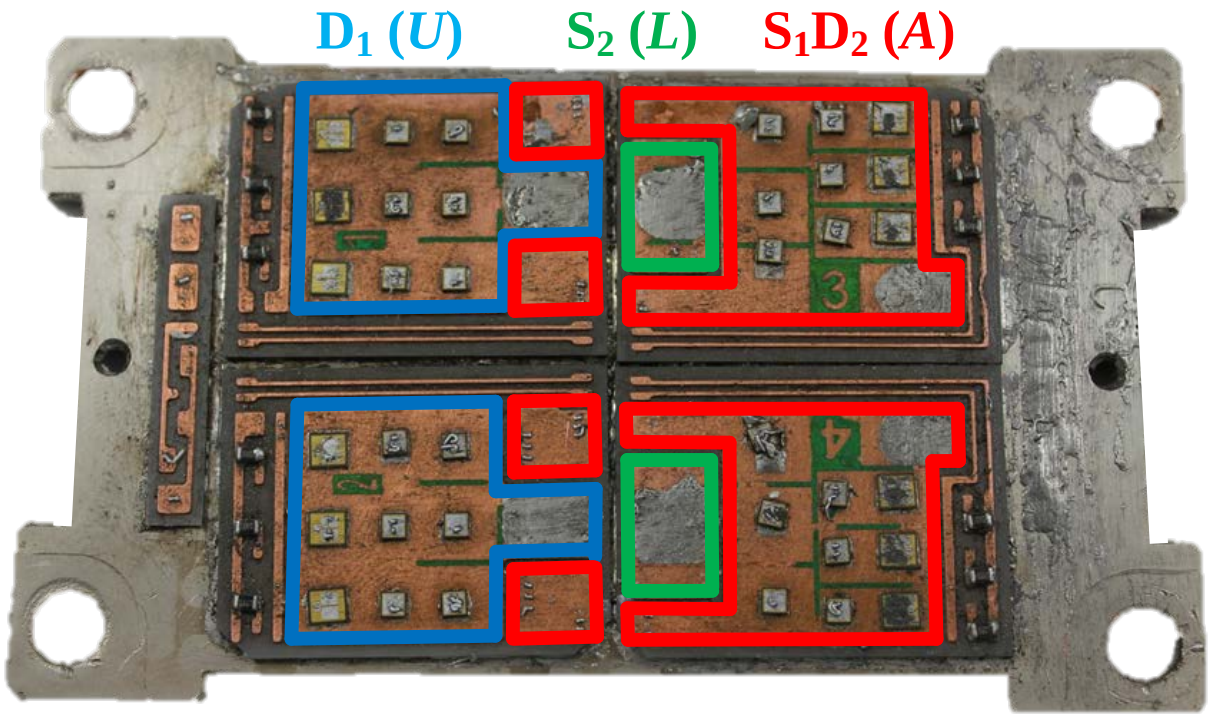

Cree CAS120 Module - Disassembled

Relaxed concept of CM voltage and flexible DM and CM definitions permit derivation of CM equivalent model.

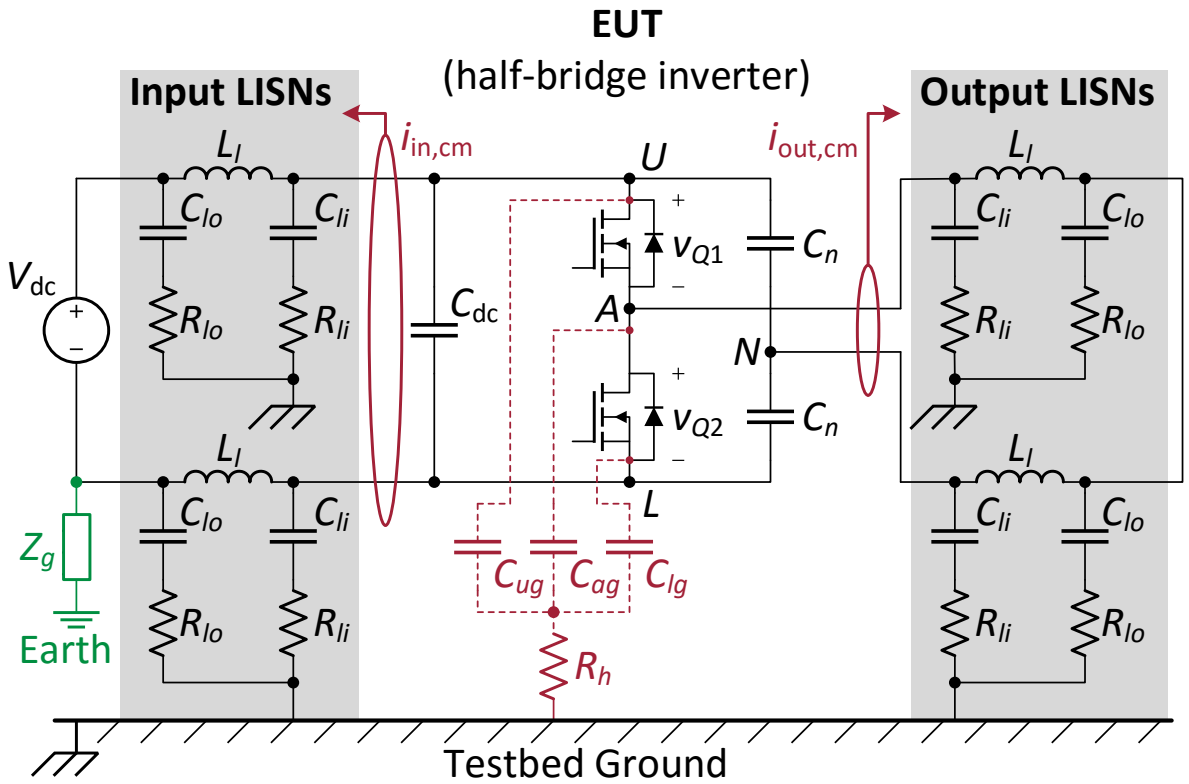

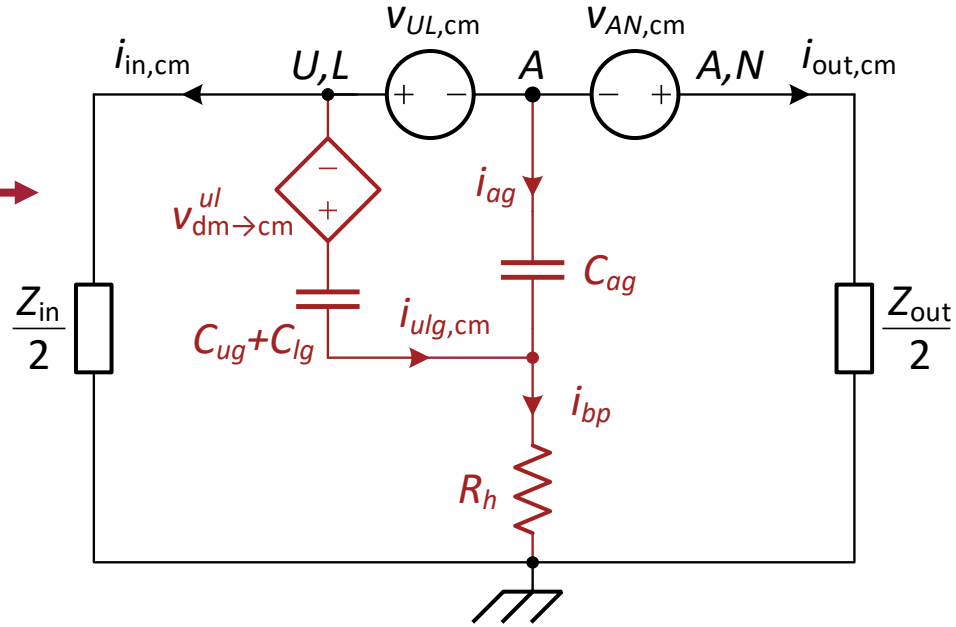

Half-bridge EMI testbed $\xrightarrow{\text{CM equivalent circuit theory}}$ **CM equivalent model**

A. Brovont, A. Lemmon, C. New, B. Nelson, B. DeBoi, "Cancellation of Leakage Currents through Power Module Baseplate Capacitance," in *Proc. IEEE Appl. Power Electron. Conf.*, March 2019.

Analysis of leakage current through the MCPM baseplate

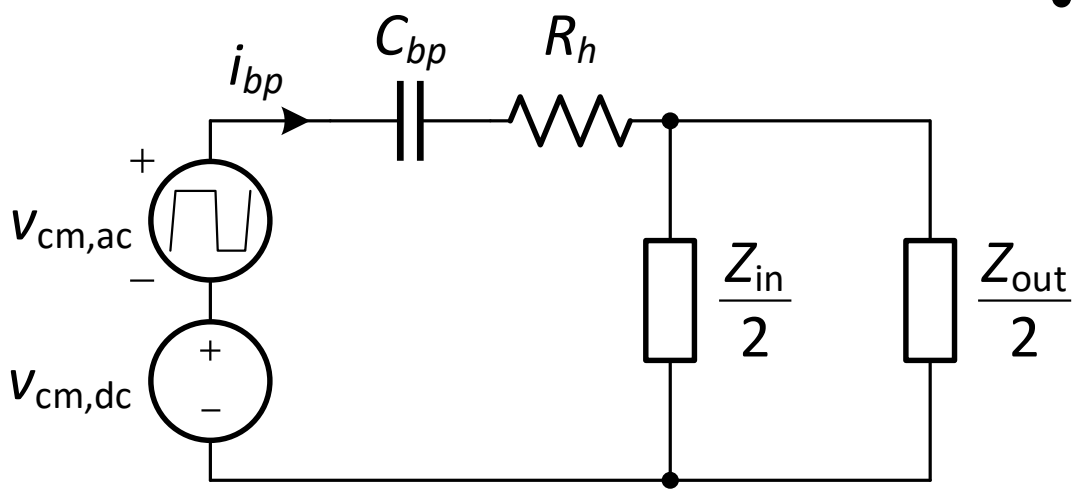

Parameter	Description	Value	Units
C_{ug}	U-to-baseplate capacitance	191	pF
C_{ag}	A-to-baseplate capacitance	255.7	pF
C_{lg}	L-to-baseplate capacitance	102.6	pF
C_{bp}	total baseplate capacitance	549.3	pF

- The equivalent CM ac voltage driving BP current is given by

$$v_{\text{cm,ac}} = \left[\frac{Z_{\text{in}}}{2(Z_{\text{in}} + Z_{\text{out}})} - \frac{C_{ag}}{C_{bp}}\right]\frac{v_{Q1} - v_{Q2}}{2}$$
$$\approx \left(\frac{1}{4} - q_{\text{ac}}\right)\frac{v_{Q1} - v_{Q2}}{2}$$

where

$$q_{\text{ac}} \triangleq \frac{C_{ac}}{C_{bp}}, \quad C_{bp} = C_{ug} + C_{ag} + C_{lg}$$

- In a typical module, $C_{ug} \approx C_{ag} > C_{lg}$

A. Brovont, A. Lemmon, C. New, B. Nelson, B. DeBoi, "Cancellation of Leakage Currents through Power Module Baseplate Capacitance," in *Proc. IEEE Appl. Power Electron. Conf.*, March 2019.

Experimental setup was devised to validate the CM model predictions.

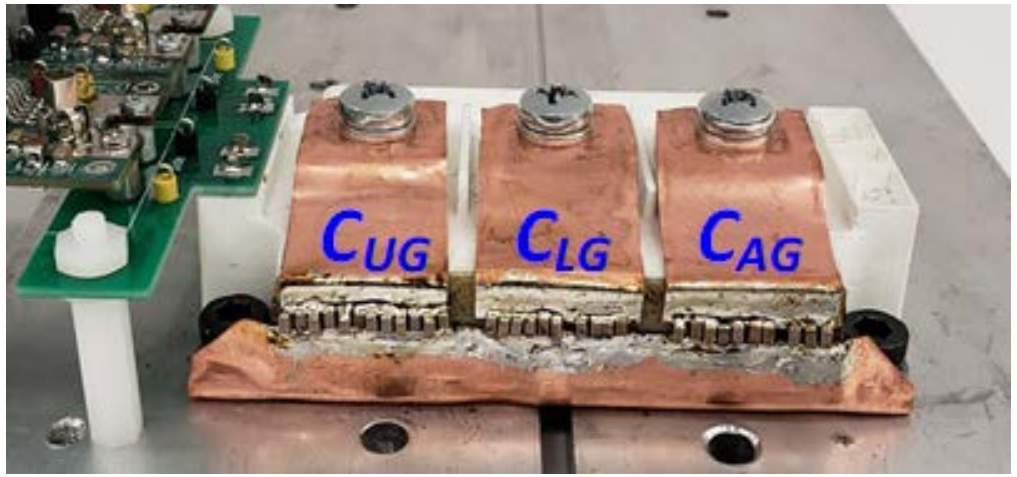

- Discrete capacitors were placed between the module terminals and the baseplate
- The q_{ac} parameter was swept across the range including the "critical" value of 1/4
- Total baseplate capacitance (C_{bp}) was held constant for all cases

External Caps Added for Sweep of q_{ac}

Study	Tab	Capacitors Added	
		Number	Value (pF)
1 ($q_{ac} \approx \frac{1}{6}$)	C_{UG}	17	563.1
	C_{AG}	2	69.3
	C_{LG}	20	660.7
2 ($q_{ac} \approx \frac{1}{5}$)	C_{UG}	16	529.7
	C_{AG}	4	135.5
	C_{LG}	19	626.8
3 ($q_{ac} \approx \frac{1}{4}$)	C_{UG}	15	497.4
	C_{AG}	6	200.3
	C_{LG}	18	594.7
4 ($q_{ac} \approx \frac{3}{10}$)	C_{UG}	14	464.7
	C_{AG}	8	266.7
	C_{LG}	17	562.2
5 ($q_{ac} \approx \frac{1}{3}$)	C_{UG}	13	432.1
	C_{AG}	10	332.2
	C_{LG}	16	529.1
Total	C_{BP}	39	1,293

A. Brovont, A. Lemmon, C. New, B. Nelson, B. DeBoi, "Cancellation of Leakage Currents through Power Module Baseplate Capacitance," in *Proc. IEEE Appl. Power Electron. Conf.*, March 2019.

Results of the q_{ac} sweep experiments

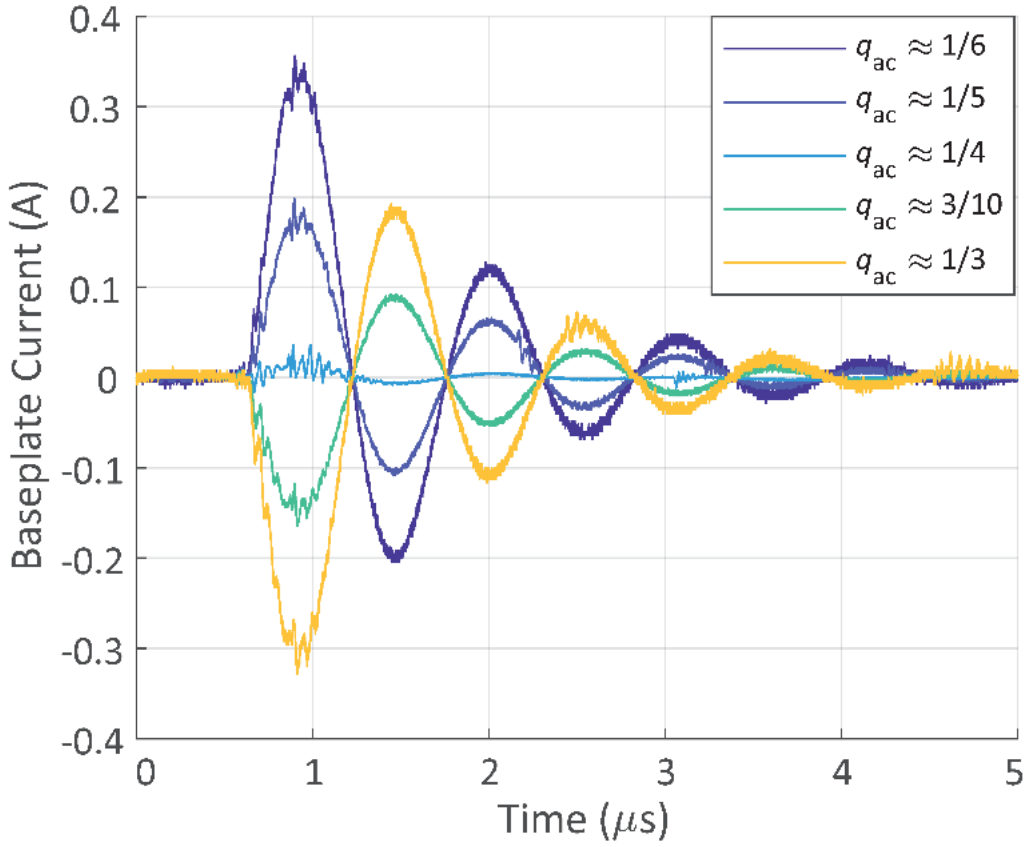

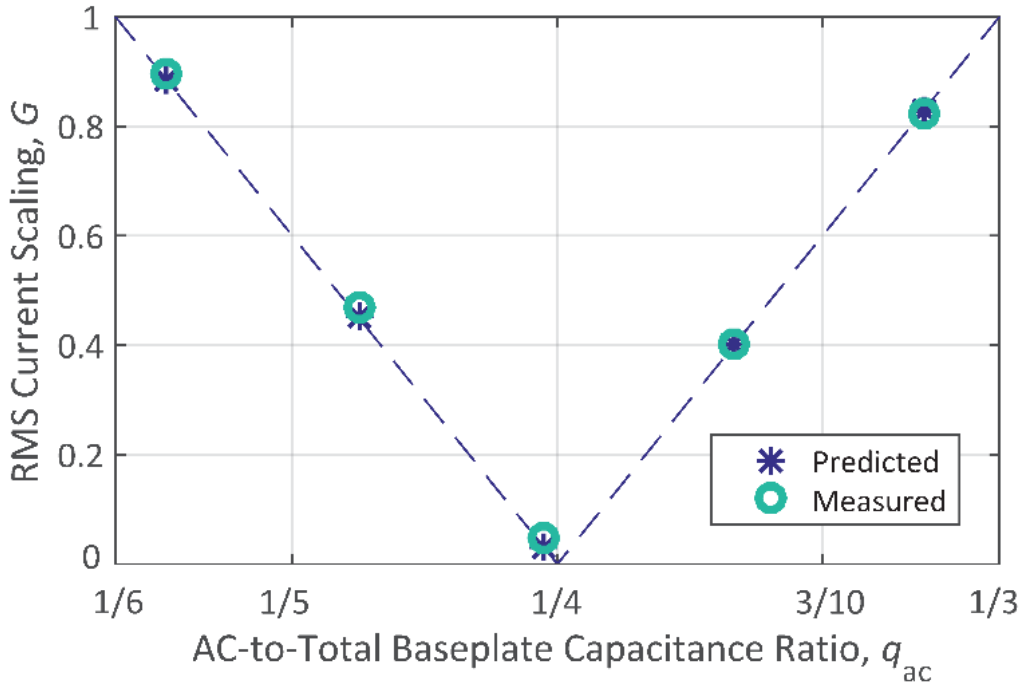

- Model accurately predicts the polarity inversion and symmetry about the "critical" q_{ac} value of 1/4

- Model accurately predicts BP current RMS amplitude over full sweep
- Cancellation occurs at the q_{ac} = 1/4

A. Brovont, A. Lemmon, C. New, B. Nelson, B. DeBoi, "Cancellation of Leakage Currents through Power Module Baseplate Capacitance," in *Proc. IEEE Appl. Power Electron. Conf.*, March 2019.

Model accurately predicts all significant characteristics of the BP current including ringing frequency and amplitude.

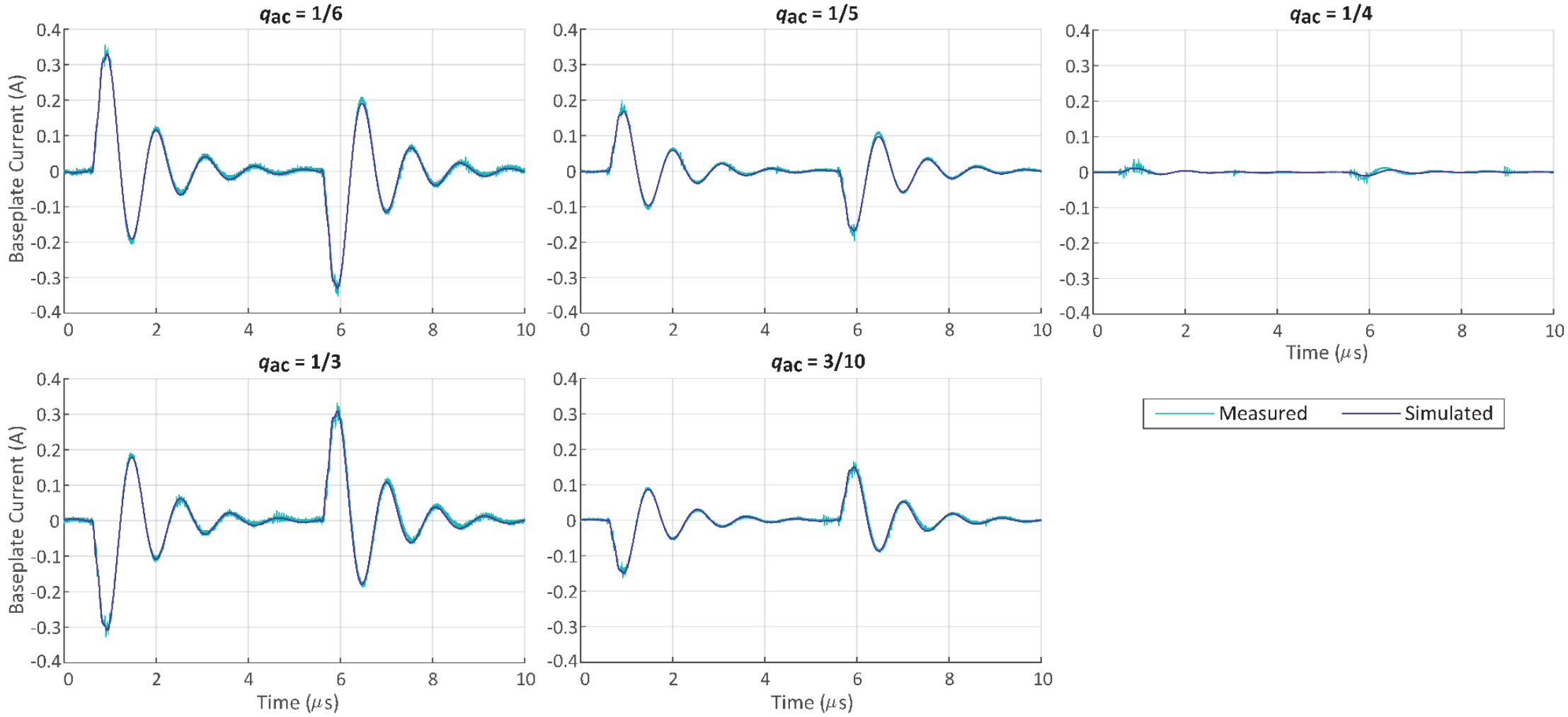

A. Brovont, A. Lemmon, C. New, B. Nelson, B. DeBoi, "Cancellation of Leakage Currents through Power Module Baseplate Capacitance," in *Proc. IEEE Appl. Power Electron. Conf.*, March 2019.

Acknowledgment

This research was supported by the U.S. Office of Naval Research under award numbers N00014-18-1-2156, N00014-18-1-2601, and N00014-18-1-2260.